GT8

1:8 SCALE 4WD NITRO TOURINGCAR

Team C

Notice

Thank you for purchasing this GT8 Touring Car by Team C. This manual shows instructions and tips to built and maintain your GT8. Please take some time to read through to get familiar with the shown steps.
We continually improve our products, due to that, actual parts my be different to the illustrations. Please check our website for the latest versions manuals and tips before you start to built this model.

This manual is written in english language only. If you need a manual in your language please visit our website or contact your distributor!

Diese Anleitung wurde in englischer Sprache verfasst. Sollten sie eine Anleitung in ihrer Sprache benötigen, besuchen sie unsere website oder konaktieren sie ihren Vertriebsagenten.

Questo manuale è stato scritto in inglese. Se avete bisogno del manuale nella tua lingua, si prega di visitare il nostro sito web o contattate il proprio distributore.

Este manual está escrito en Inglés. Si necesita el manual en su idioma, por favor visite nuestro sitio web o contacte con su distribuidor.

Ce manuel est écrit en langue anglaise. Si vous avez besoin d'un manuel dans votre langue s'il vous plaît visitez notre site web ou contactez votre distributeur!

Deze handleiding is geschreven in het Engels taal beschikbaar. Als u een handleiding in uw eigen taal kunt u terecht op onze website of neem contact op met uw distributeur!

Generall Information

THIS IS NOT A TOY!
Not suitable for children under 14 years of age without adult supervision.

This is a high performance vehicle, for safety reason don’t run on public streets, in crowded areas, environmentally areas or near children or animals.

This model contains rotationg parts and parts which become hot during operation. Care must been taken to avoid damage or injuries.

This product may require some assembly and routine maintance.

This product is covered by warranty based on material defectives. Crash damage or maintenance failures are not covered under warranty.

Batteries should be used in good condition only, and need to be fully charged.

Nitro models should be driven outside of buildings only. Inhaling exhaust gases could cause health damage.

Keep chemicals stored out of the range of small children.

Make sure your model and equipment is in perfect condition before you use it, to ensure savety and fun while driving.

Transmitter Preparation

Power Switch

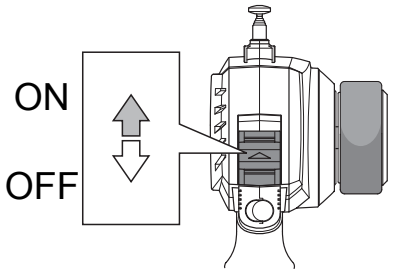

Antenna

Extend the antenna to the maximum
Length for best performance

27MHzTransmitter Crystal（TX）

Transmitter crystal(TX)

Receiver crystal(RX)

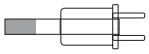

The crystal can be replaced to change frequencies.
Note : You must also change receiver crystals!
Do not use AM crystals

Battery Level Indicator

Good Batteries

Low Batteries(Light Blinks)

Reverse Switch
反向开关

! Servo Factory Settings

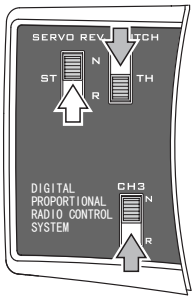

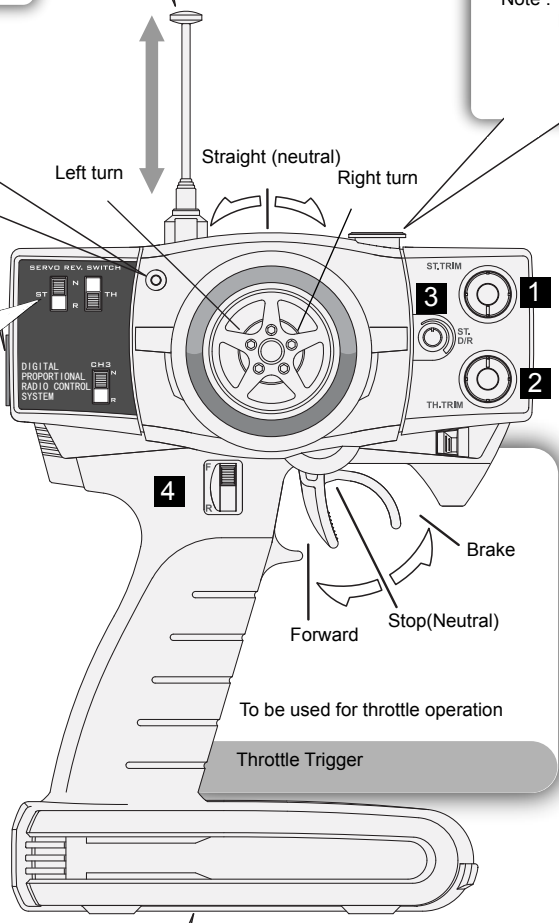

To be used for throttle operation

Throttle Trigger

1 Steering Trim

To be used for trimming the steering operation

2 Throttle Trim

To be used for trimming the throttle operation

4 3ch Switch

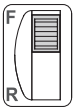

This switch is used for optional parts.

3 Steering Dual Rate

To be used to adjust steering servo throw

Transmitter Battery Installation

Open battery cover at the bottom of transmitter.
Install batteries. Follow the direction of batteries
designated in the inside of battery box.

Battery Cover

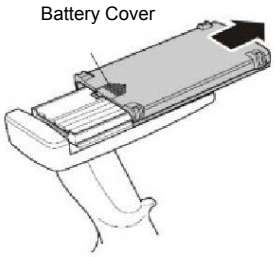

8X AA Alkaling Batteries

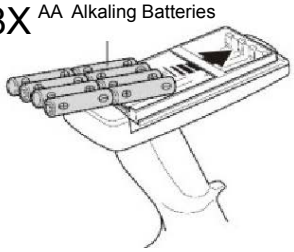

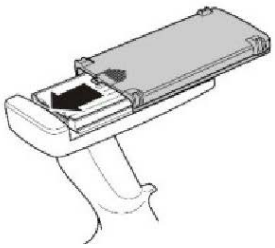

Transmitter Preparation

A new Ni-MH battery must be charged before it is used.Refer to the charger instruction manual for charging.

Set up the radio control system as indicated below。

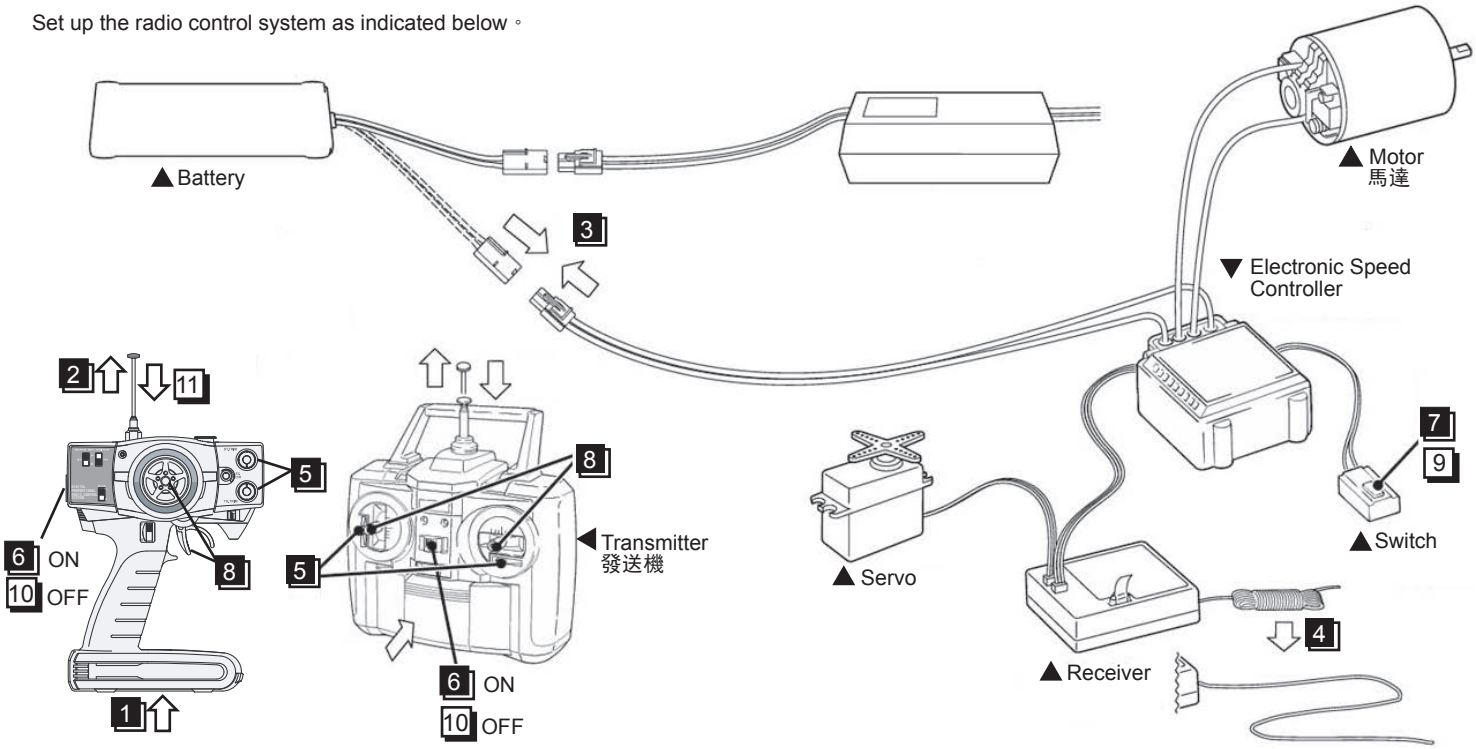

● Start

1. Install batteries.(Transmitter)
2. Extend the antenna.(Transmitter)
3. Connect the battery
4. Extend the antenna.(Reveiver)
5. Center the trims.
6. Switch on.(Transmitter)
7. Switch on.(Reveiver)
8. Make sure the servos are in command.

● Finish

9. Switch off.(Reveiver)
10. Switch off.(Transmitter)
11. Retract the antenna(Transmitter)

Tools required

● Needie Nose Pllers

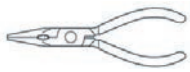

● Awi

● Grease

● Screw Cement

● Instant Glue

● Ball differential Grease(Clear)

● Molybdenum Grease(Black)

● SP KINFE EDGE REAMER

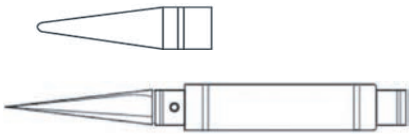

No need to pre-drill precise holes
(1mm to 15mm)can be drilled

● Wire Cutters

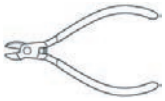

● ROUND CUTTER&SANDER

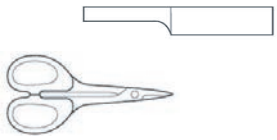

For trimming bodies!

● Hex Wrench

● Hex Wrench

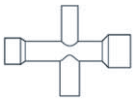

● Sharp Hobby knife

1 Servo Saver Turnbuckle

Bag-A

1:1

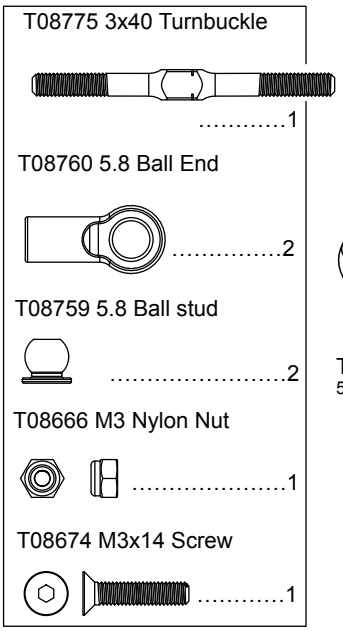

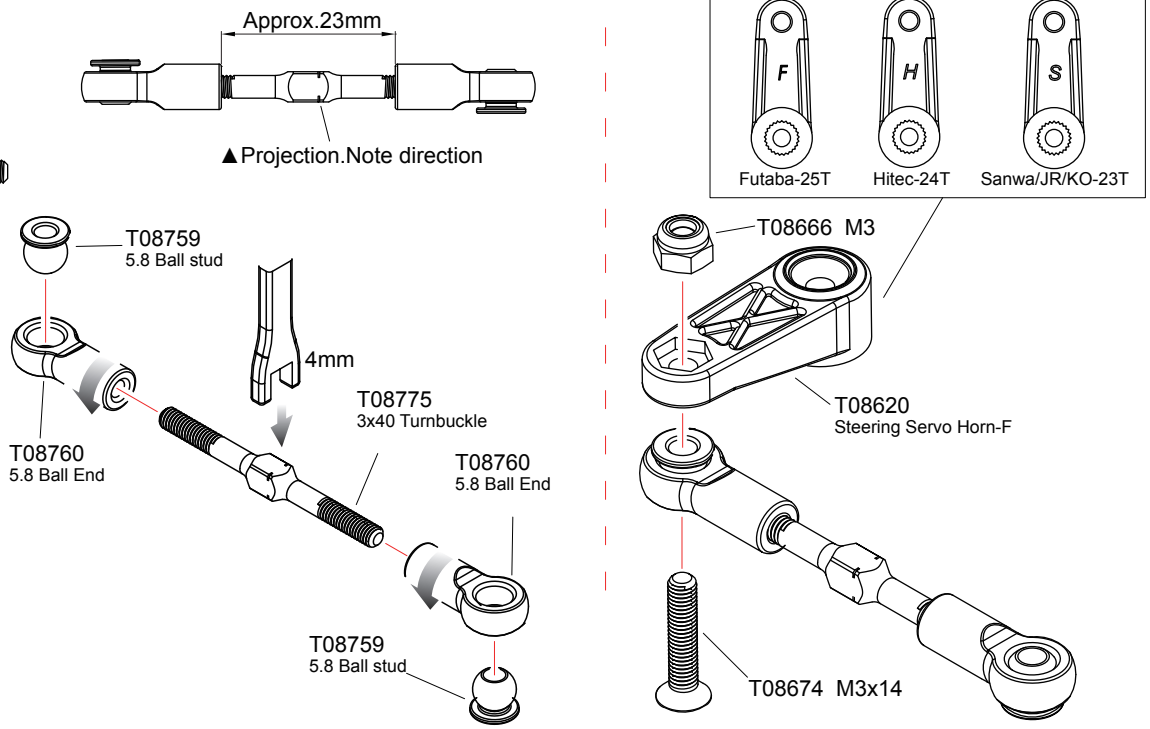

2 Buffer

Bag-A

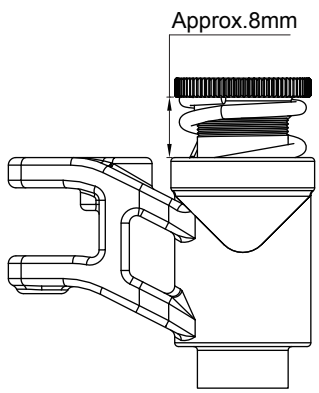

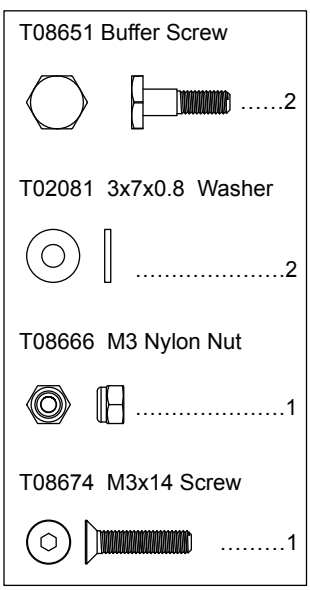

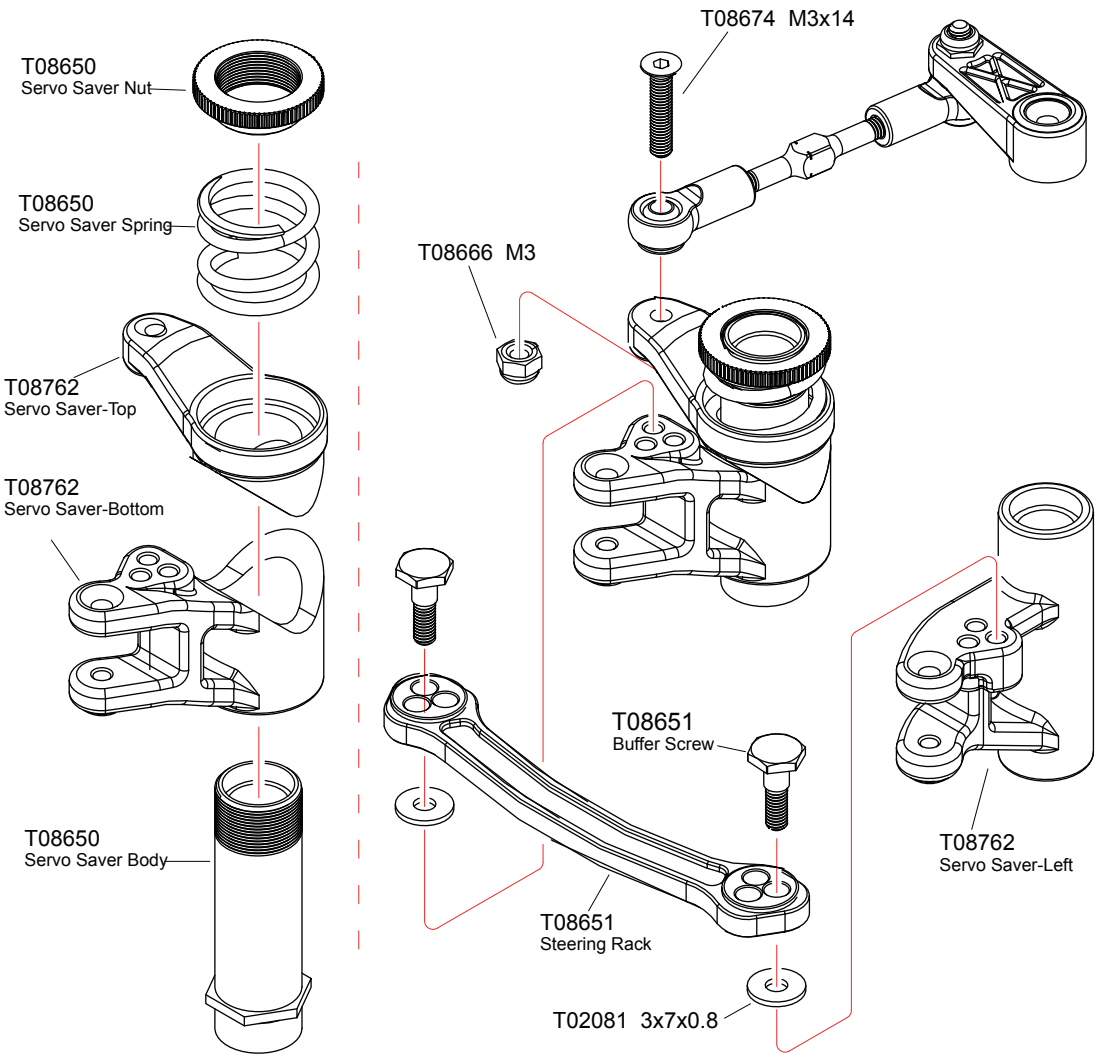

1:1 True-to -scale diagram

3 Servo Saver Post/Side Plate

Bag-A Bag-B

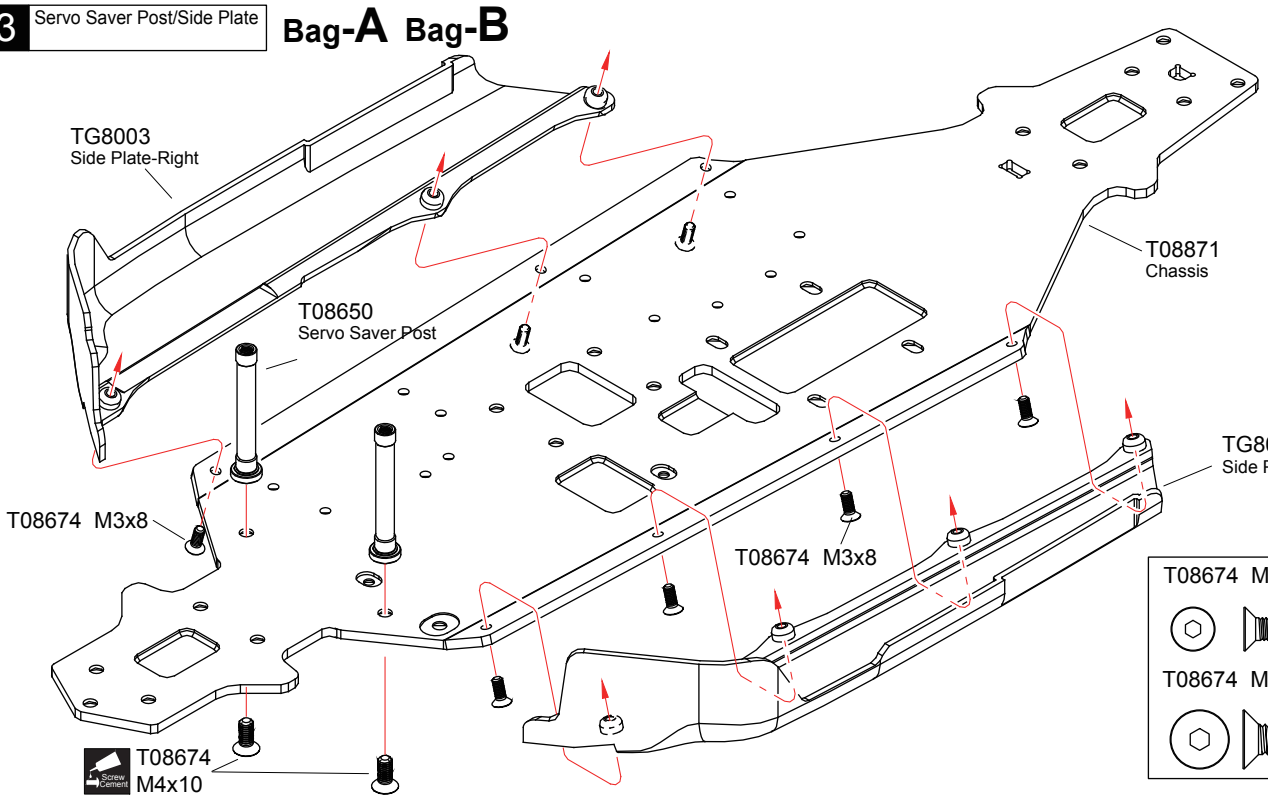

T08674 M3x8 Screw	7
T08674 M4x10 Screw	2

4 Buffer

Bag-A

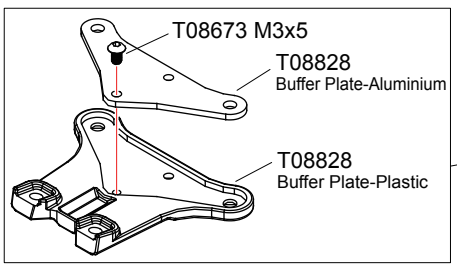

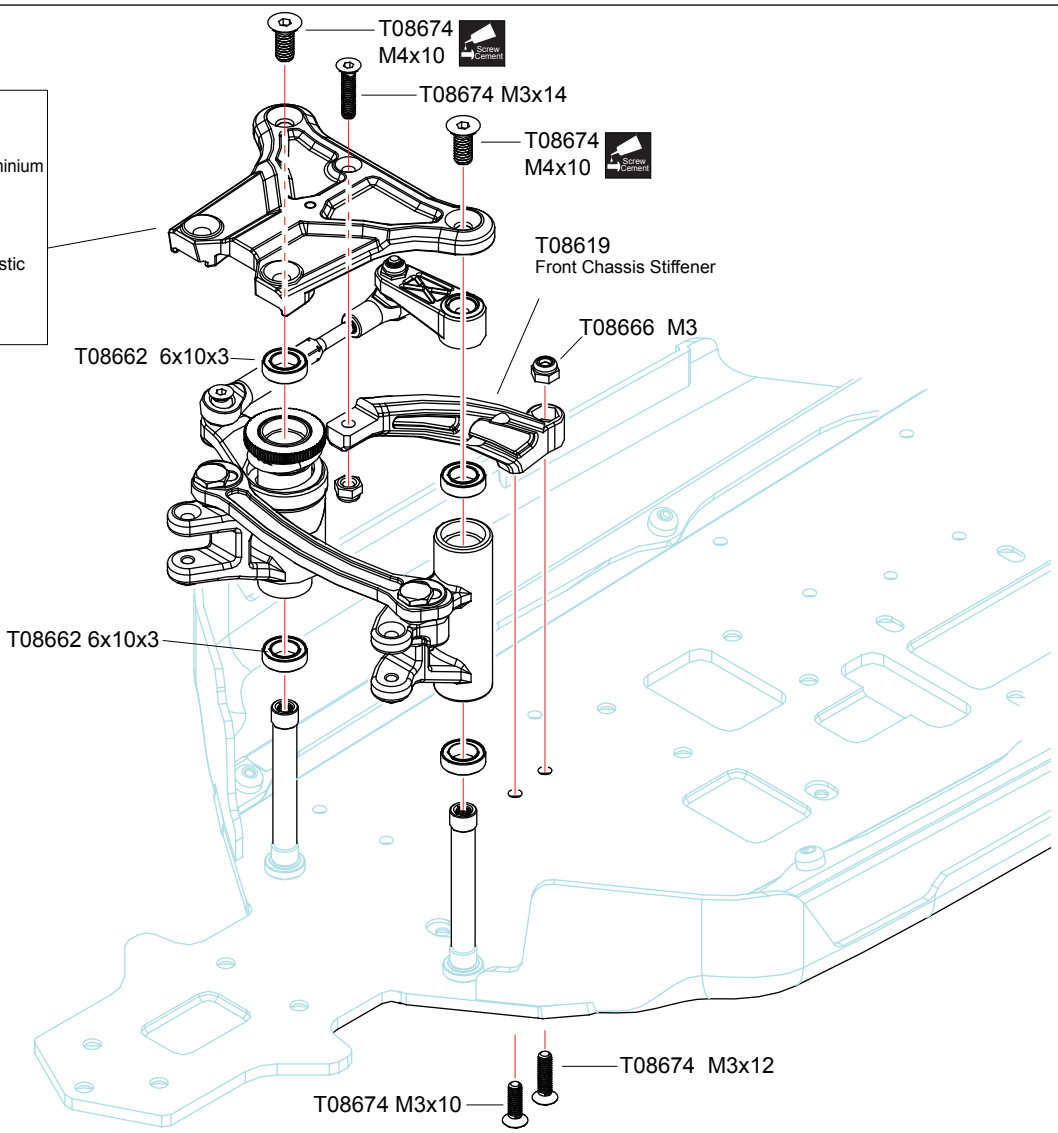

T08673 M3x5 Screw	1
T08674 M3x10 Screw	1
T08674 M3x12 Screw	1
T08674 M3x14 Screw	1
T08674 M4x10 Screw	2
T08662 6x10x3 Ball Bearing	4
T08666 M3 Nylon Nut	2

Apply threadlocker(screw cement)

5 Front/Rear Differential

x2 **Bag-C**

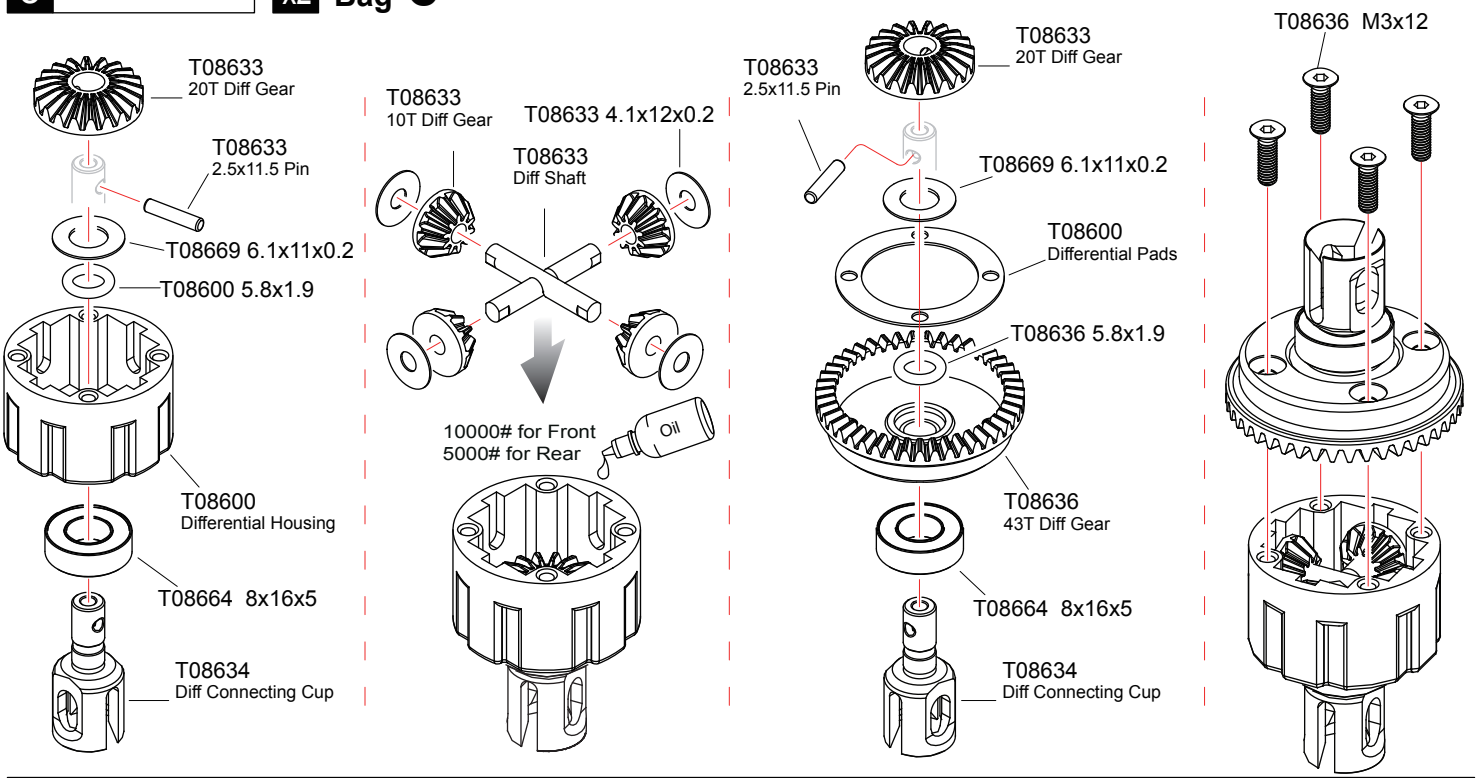

T08600/T08636 5.8x1.9 O-Ring	T08633 4.1x12x0.2 Washer	T08669 6.1x11x0.2 Washer	T08664 8x16x5 Ball Bearing	T08636 M3x12 Screw
.....4	8	4	4	8

6 Front Differential Case

Bag-C **Bag-D**

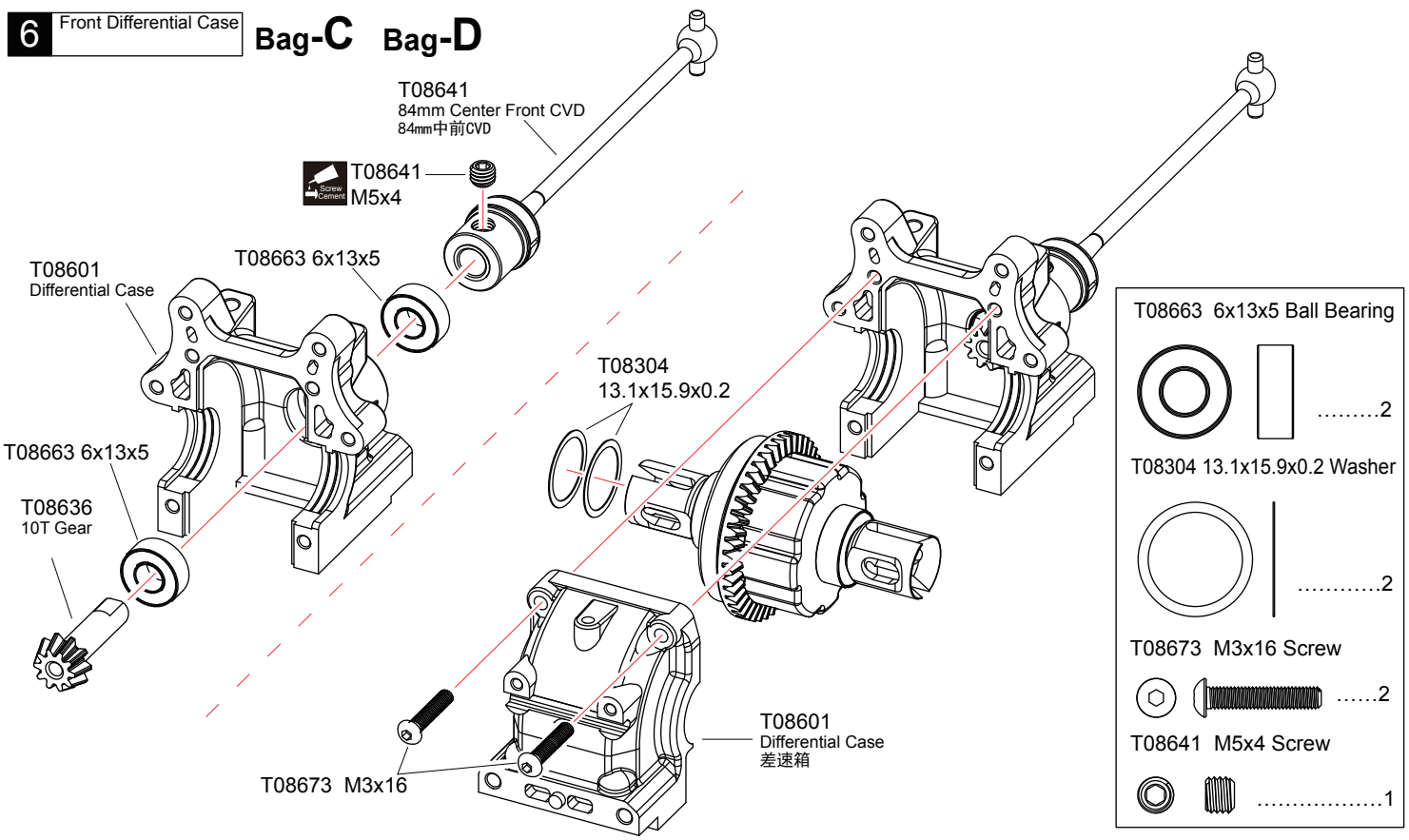

T08663 6x13x5 Ball Bearing	T08304 13.1x15.9x0.2 Washer	T08673 M3x16 Screw	T08641 M5x4 Screw
.....2	2	2	1

Screw Cement Apply threadlocker(screw cement)

x2 Assemble as many times as specified

7 Front Swaybar Bag-D

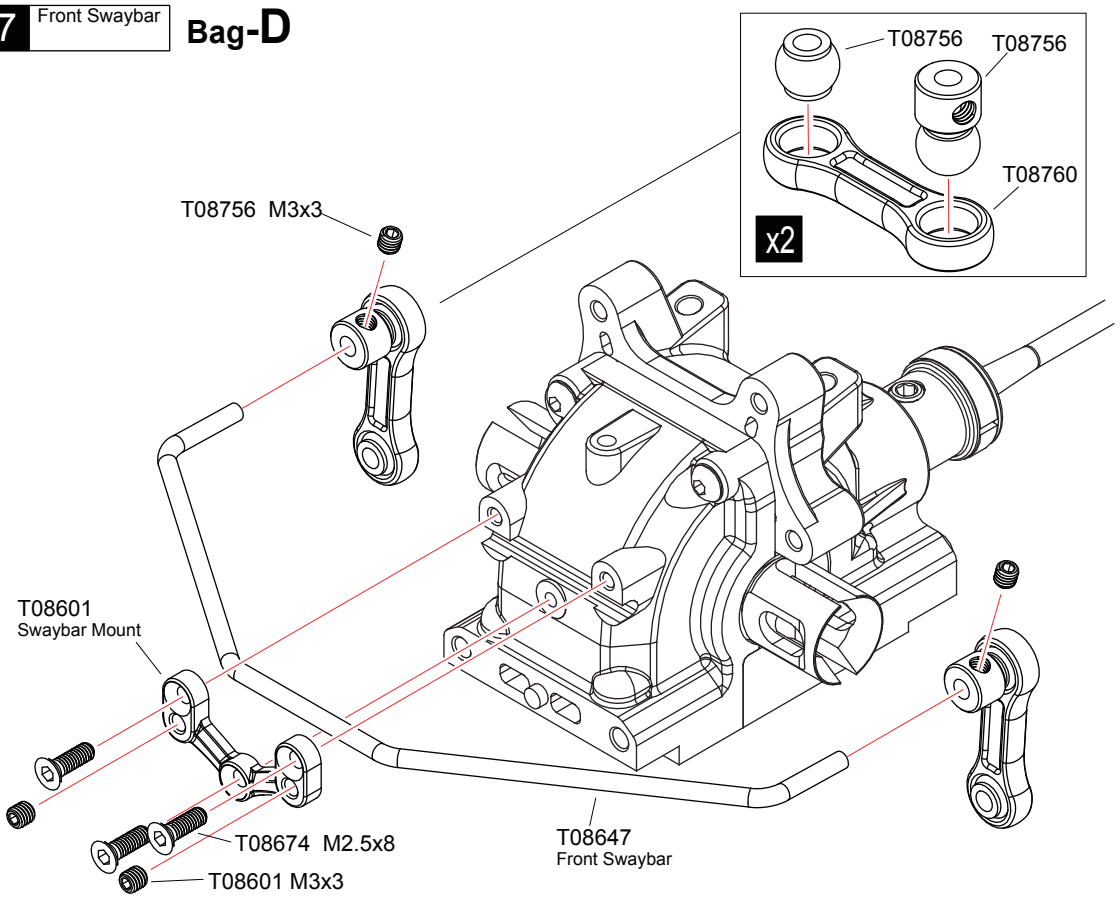

T08674 M2.5x8 Screw 3

T08601/T08756 M3x3 Screw 4

T08756 6.8 Ball stud 2

T08755 6.8 Ball stud 2

T08760 6.8 Ball End
6. 8球头座 2

8 Front Hub Carrier Bag-D

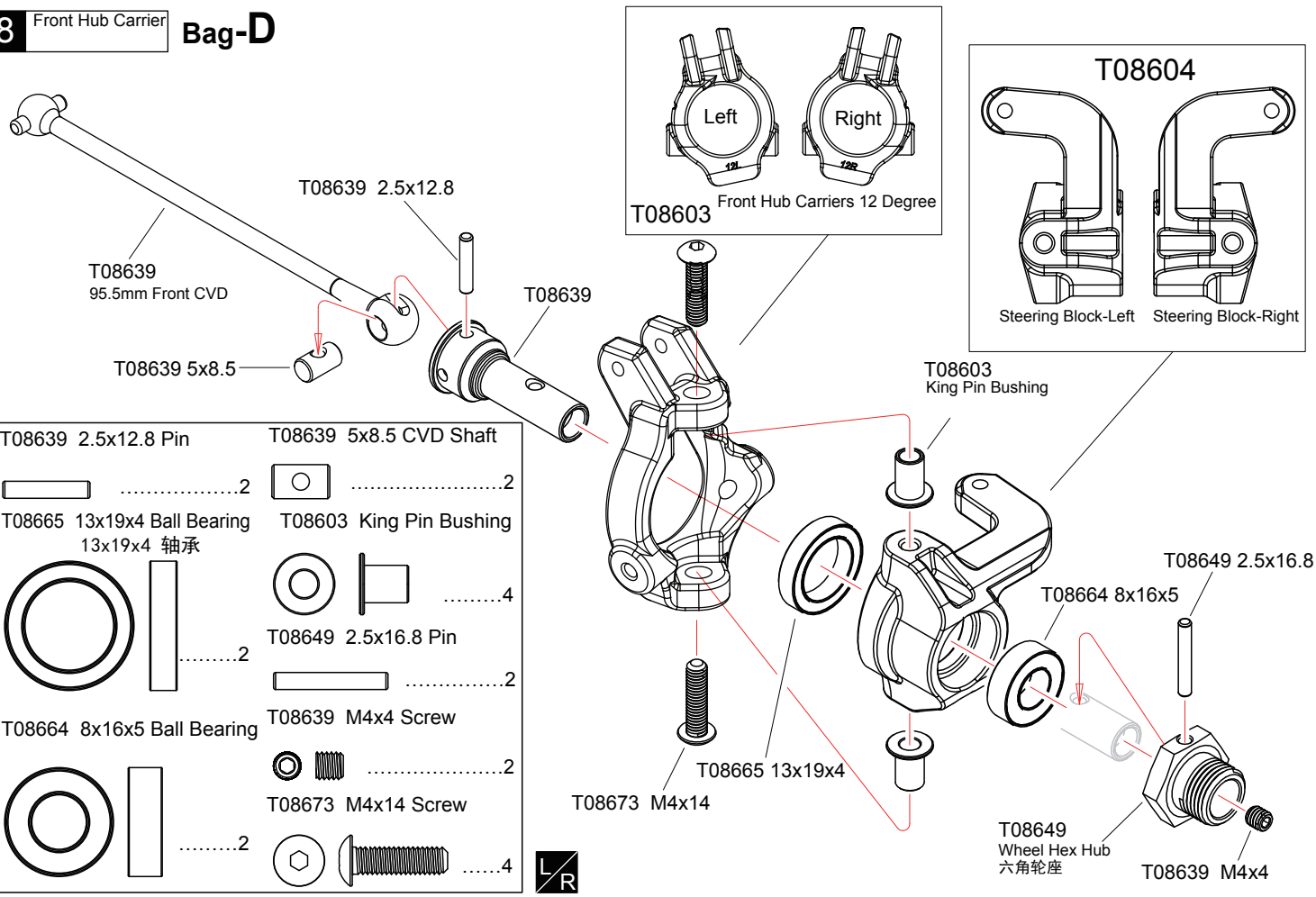

T08639 2.5x12.8 Pin 2

T08639 5x8.5 CVD Shaft 2

T08665 13x19x4 Ball Bearing
13x19x4 轴承 2

T08603 King Pin Bushing 4

T08649 2.5x16.8 Pin 2

T08664 8x16x5 Ball Bearing 2

T08639 M4x4 Screw 2

T08673 M4x14 Screw 4

L/R Assemble both Left and Right

x2 Assemble as many times as specified

9 Front Hub Carrier

Bag-D

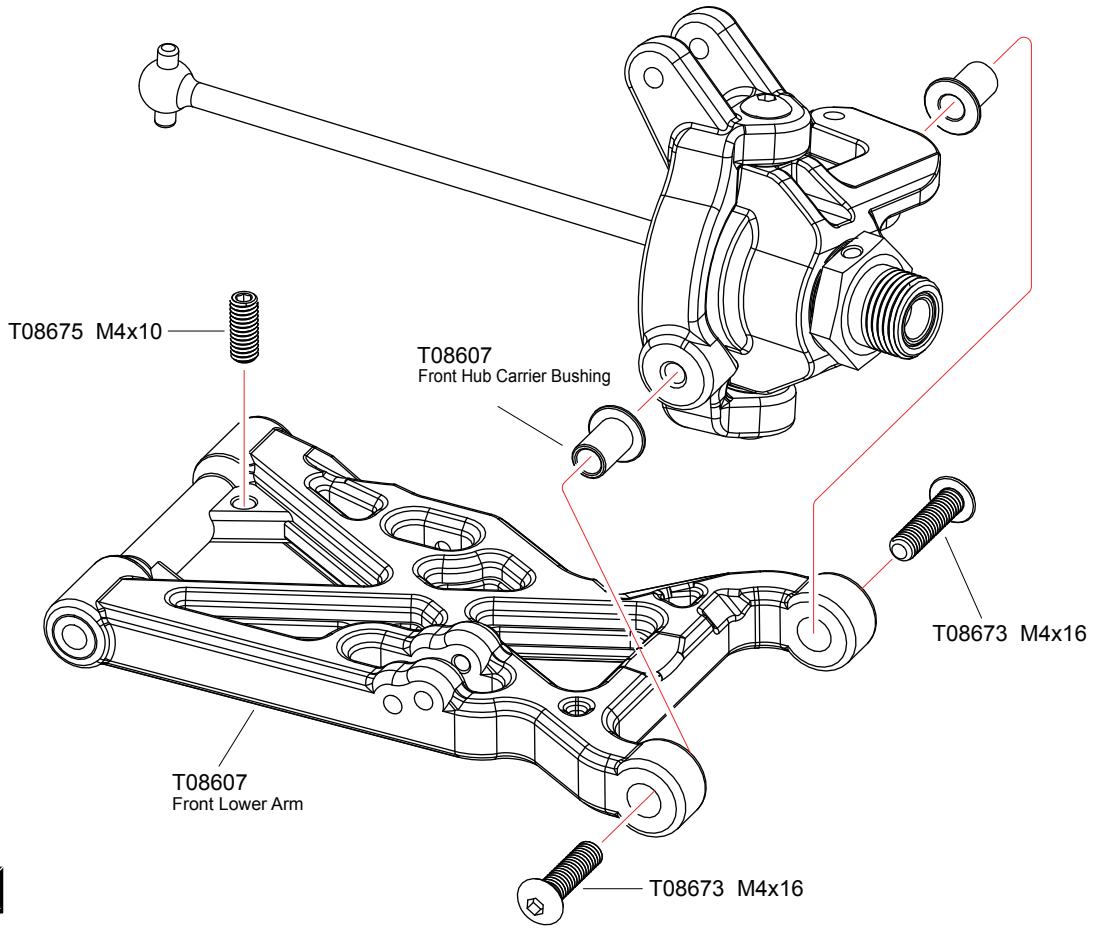

T08675 M4x10 Screw

.....2

T08607 Front Hub Carrier Bushing

.....4

T08673 M4x16 Screw

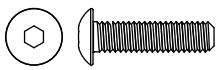

.....4

L/R

10 Front Suspension

Bag-D

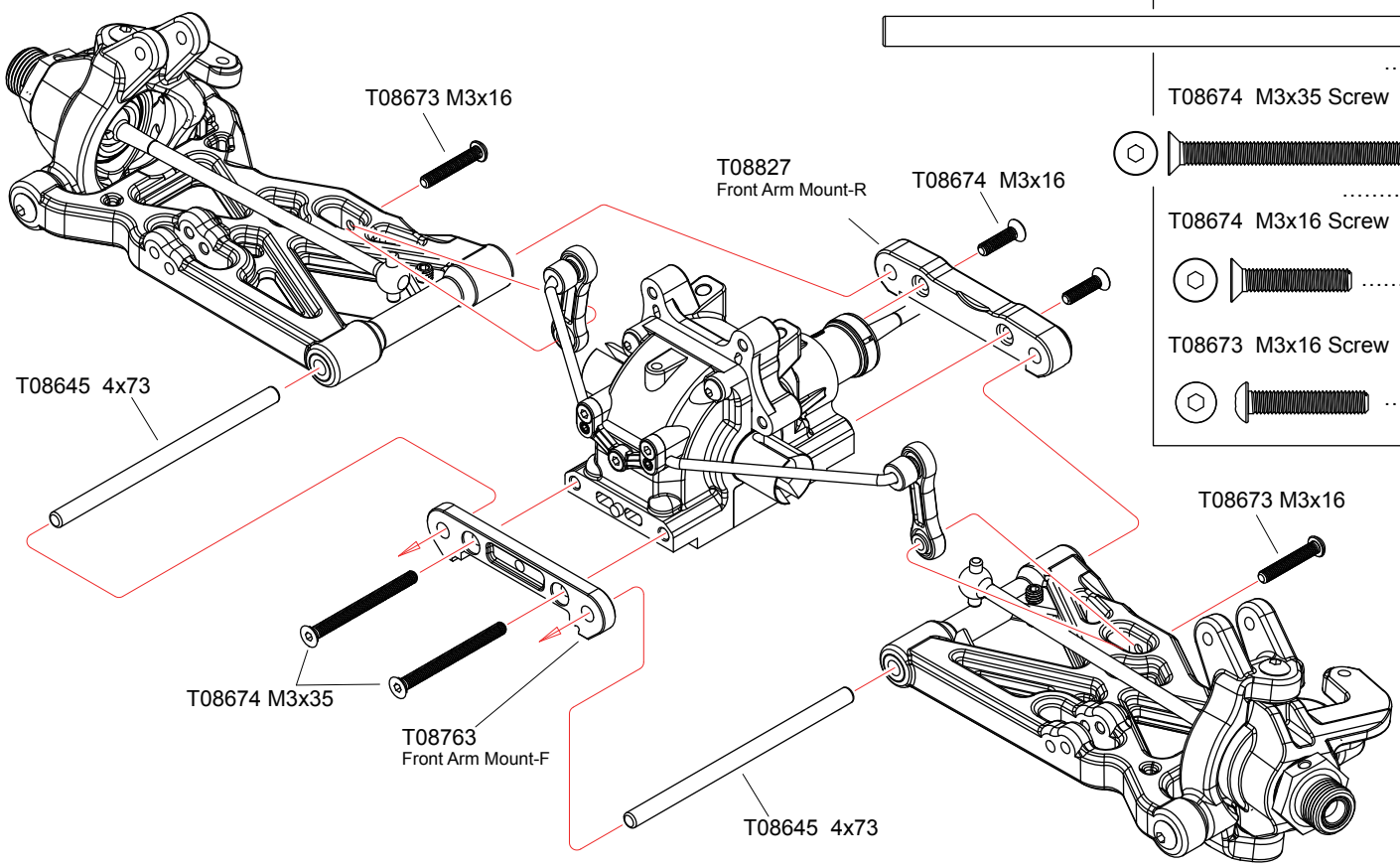

T08645 4x73 Arm Pin

.....2

T08674 M3x35 Screw

.....2

T08674 M3x16 Screw

.....2

T08673 M3x16 Screw

.....2

L/R Assemble both Left and Right

11 Front Shock Tower Bag-D

T08862
M3.5x28

T08622
Ball stud

T08674 M3x12

T08842
Front Shock Tower
前避震架

T08674 M3x12 Screw	T08862 M3.5x28 Screw	T08622 Shock cap ball
.....4	2	2

12 Front Upper Turnbuckle Bag-D

T08757
7.8 Ball stud

5mm

T08778
5x58 Turnbuckle

T08760
7.8 Ball End-Front Upper

T08758
7.8 Ball stud

T08760
7.8 Ball End-Front Upper

1:1 x1 Front Upper-Left

Approx.32mm

▲Projection.Note direction

1:1 x1 Front Upper-Right

▲Projection.Note direction

T08778 5x58 Turnbuckle	T08758 7.8 Ball stud	T08757 7.8 Ball stud	T08760 7.8 Ball End-Front Upper
.....2	2	2	4

1:1 True-to -scale diagram

x1 Assemble as many times as specified

Apply threadlocker(screw cement)

13 Steering Turnbuckle

Bag-D

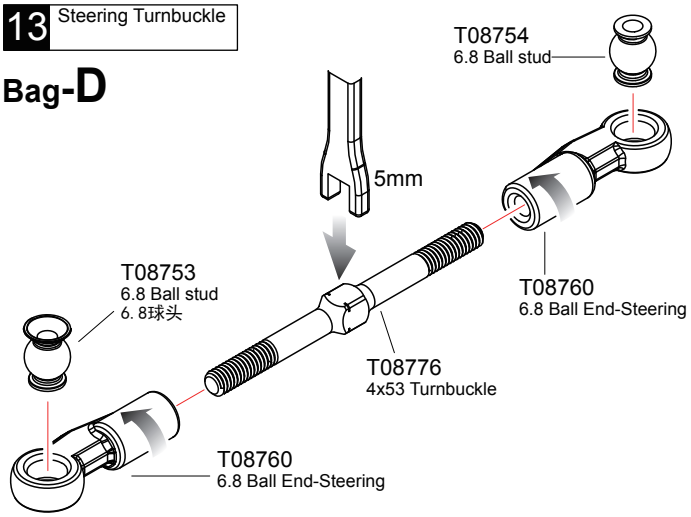

1:1 x1 Steering-Left

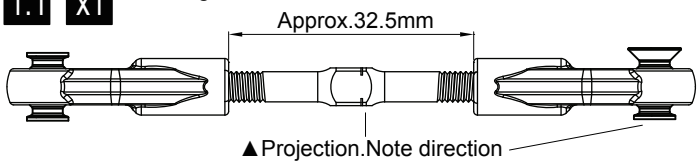

1:1 x1 Steering-Right

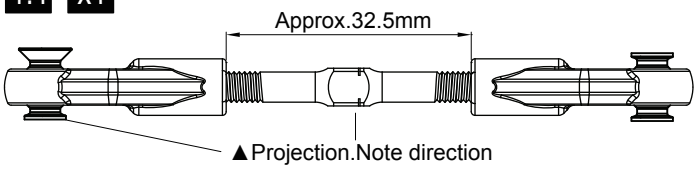

T08776 4x53 Turnbuckle	T08753 6.8 Ball stud	T08754 6.8 Ball stud	T08760 6.8 Ball End-Steering
.....2	2	2	4

14 Front Upper/Steering Turnbuckle

Bag-D

T08676 M3x20 Screw	T08674 M3x16 Screw
.....2	2
T08676 M3x25 Screw	T08666 M3 Nylon Nut
.....2	6

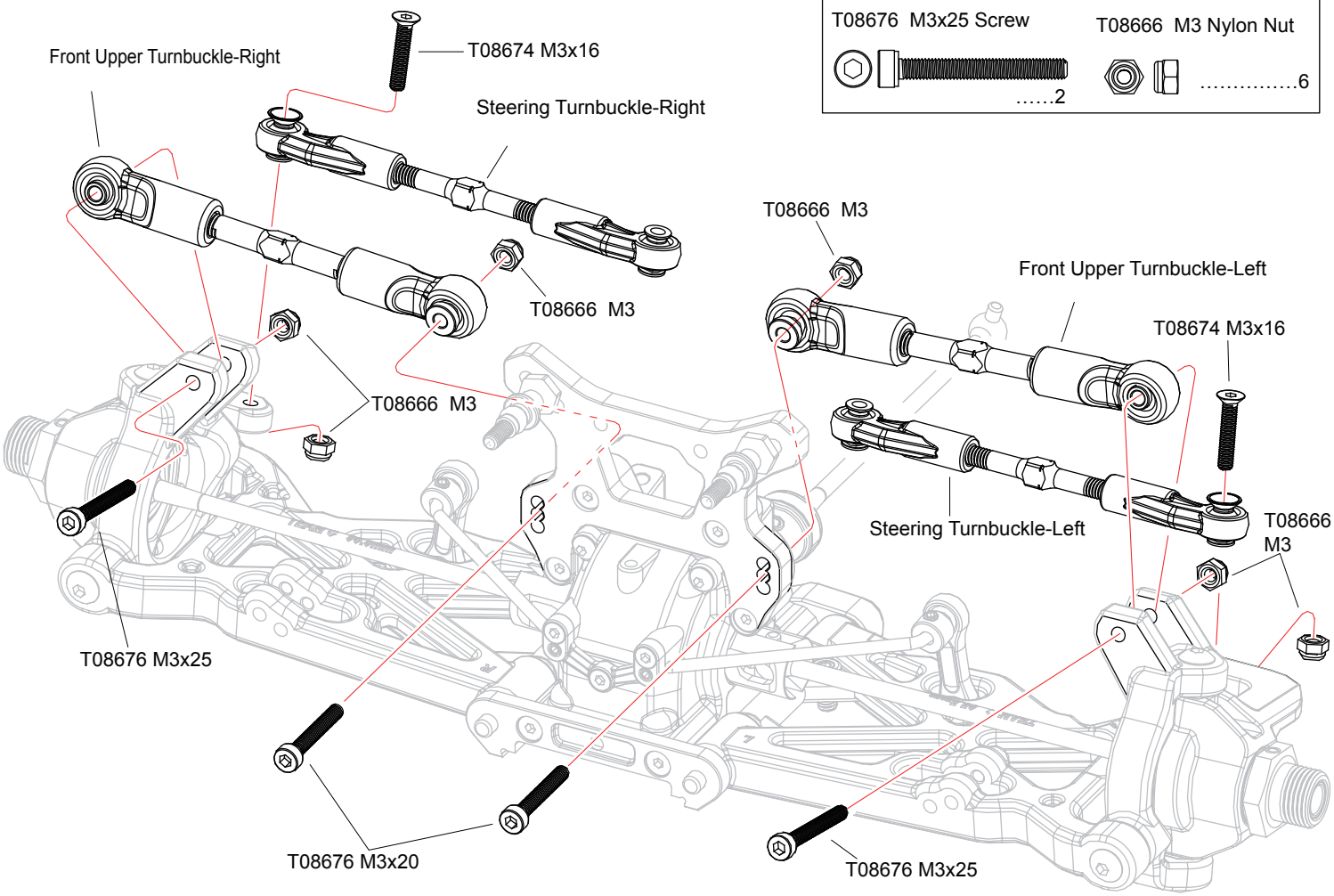

1:1 True-to -scale diagram

x1 Assemble as many times as specified

15 Front Suspension Bag-D

T08674 M4x10
T08674 M3x18
T08674 M3x18
T08666 M4
T08829
Front Bumper Plate-Lower
T08674
M4x14
T08674
M4x10
T08674 M4x14

T08666 M4 Nylon Nut	1
T08674 M3x18 Screw	2
T08674 M4x10 Screw	3
T08674 M4x14 Screw	4

16 2 Speed Changer Bag-C

T08823
2nd Spur Gear-42T
T08855
2nd Spur Gear Mount
TG8030 M3x6
TG8030 M3x6
T08856
1nd Spur Gear Mount
T08824
1nd Spur Gear-46T
T08857
4.0 Ball
T08857
2 Speed Clutch Spring
T08854
2 Speed Clutch Shaft
T08673
M3x12
T08826
2 Speed Clutch Shoe
T08675 M4x4

T08673 M3x12 Screw	2
T08675 M4x4 Screw	2
TG8030 M3x6 Screw	6
T08857 4.0 Ball	2

17 2 Speed Changer Bag-C

T08855 8x12x3.5 Ball Bearing 2

T08664 8x16x5 Ball Bearing 2

T08853 M5x4 Screw 2

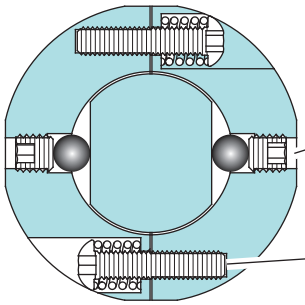

Gently tweaked the screw of M4 until it came to the steel surface
Screw head should not be out of the surface.

Tighten M3 screw to collar till the screw stops, and unscrew 3 rounds, then please set up according to the track condition.

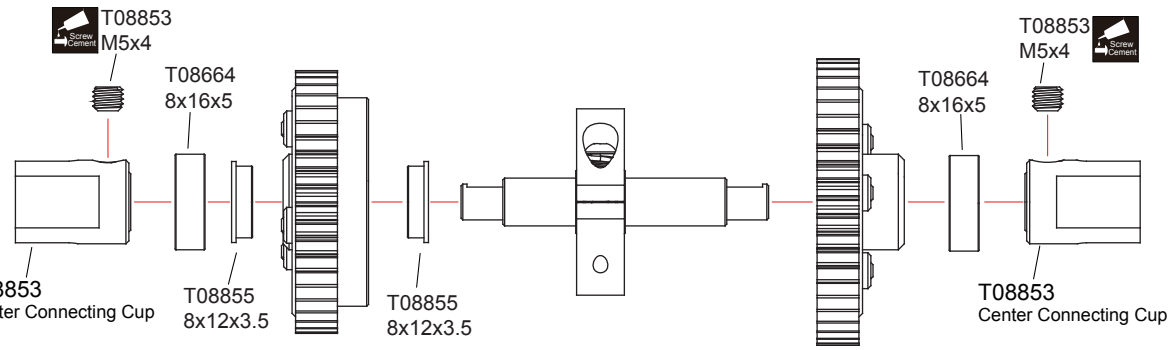

18 Brake Bag-C

T08602 Brake Screw 4

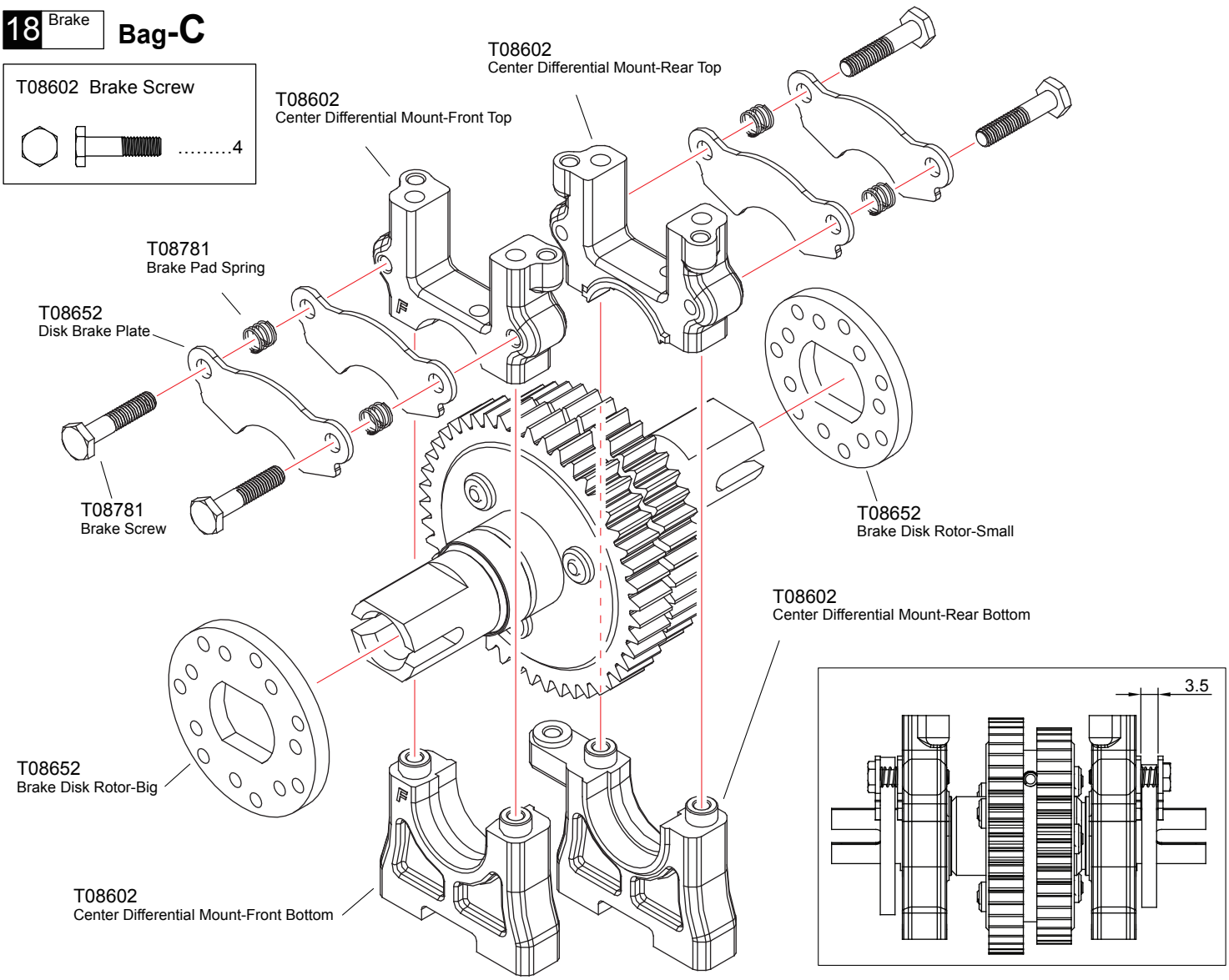

Apply threadlocker(screw cement)

19 Brake/Throttle Bag-C

T08677 5x8x2.5 Ball bearing 2

T08653 M3x3 Screw 2

T08602 M3x8 Screw 4

T08602 M3x30 Screw 4

T08602 M3x8

T08653 M3x3 (Screw Cement)

T08602 M3x30

T08825 Center Diff Upper Plate

T08653 Brake Rod

T08677 5x8x2.5

T08653 Brake Shaft

20 Brake/Throttle Bag-C

T08834 M3x3 Screw 6

T08666 M2.5 Nylon Nut 1

T08834 3.1x7x1 Plastic Washer 2

T08676 M2.5x8 Screw 1

T08863 M2.5x15 Screw 1

T08666 M2.5

T08834 Brake Actuator

T08666 3.1x7x1

T08834 1.8x58 Rod 1. 8x58 拉杆

T08620 Throttle Servo Arm

T08834 M3x3 (Screw Cement)

T08834

T08834 M3x3 (Screw Cement)

T08834

T08834 Throttle Spring

T08863 M2.5x15

T08834 Throttle Actuator

T08618 M3x3 (Screw Cement)

T08834

T08676 M2.5x8

T08834

T08834 Brake Spring

T08834 M3x3 (Screw Cement)

T08834

T08834 1.8x58 Rod

T08834

Apply threadlocker(screw cement)

21 2 Speed Changer Set

Bag-C

T08674 M4x12 Screw

.....4

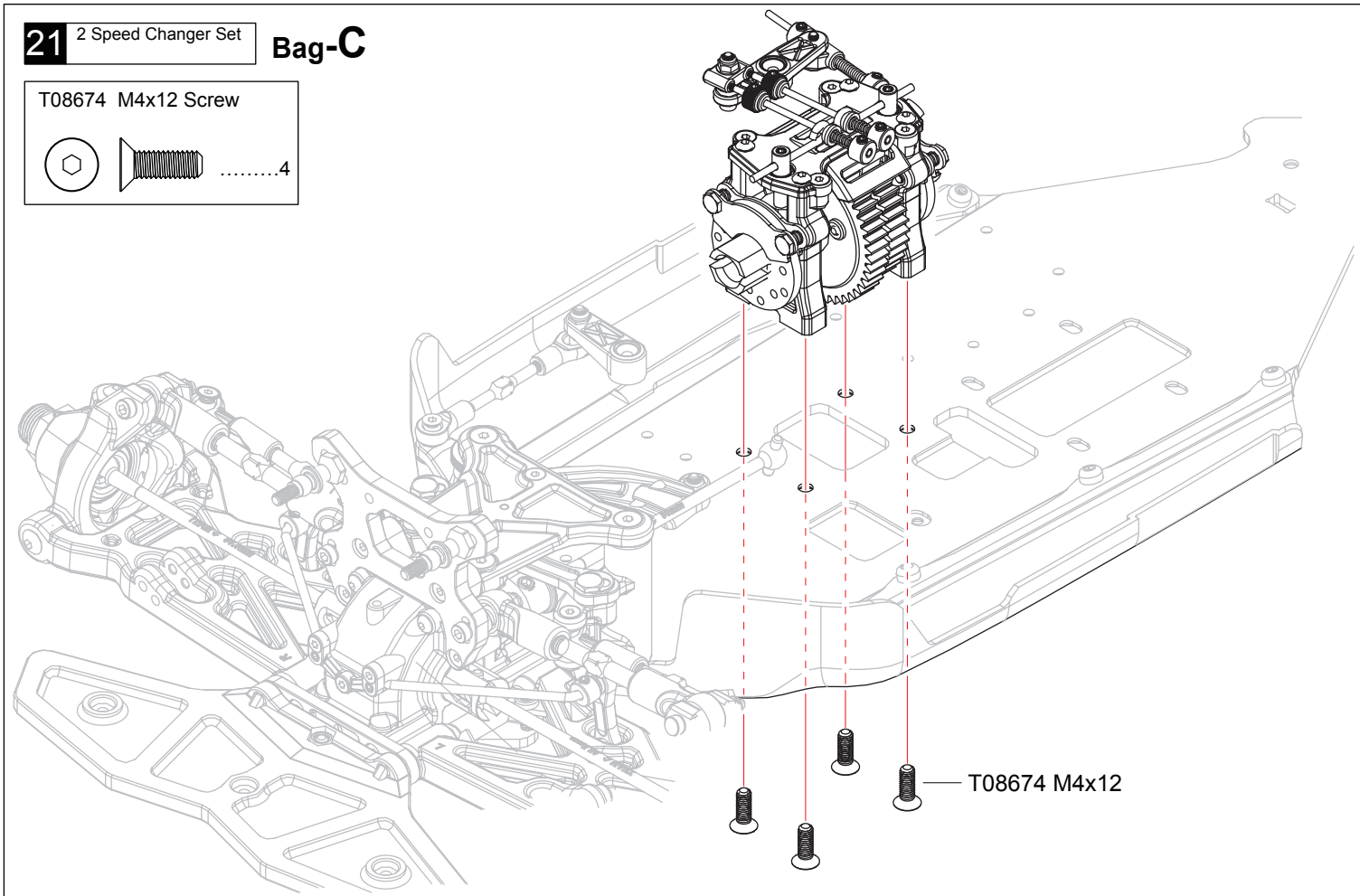

22 Rear Differential Case

Bag-C Bag-E

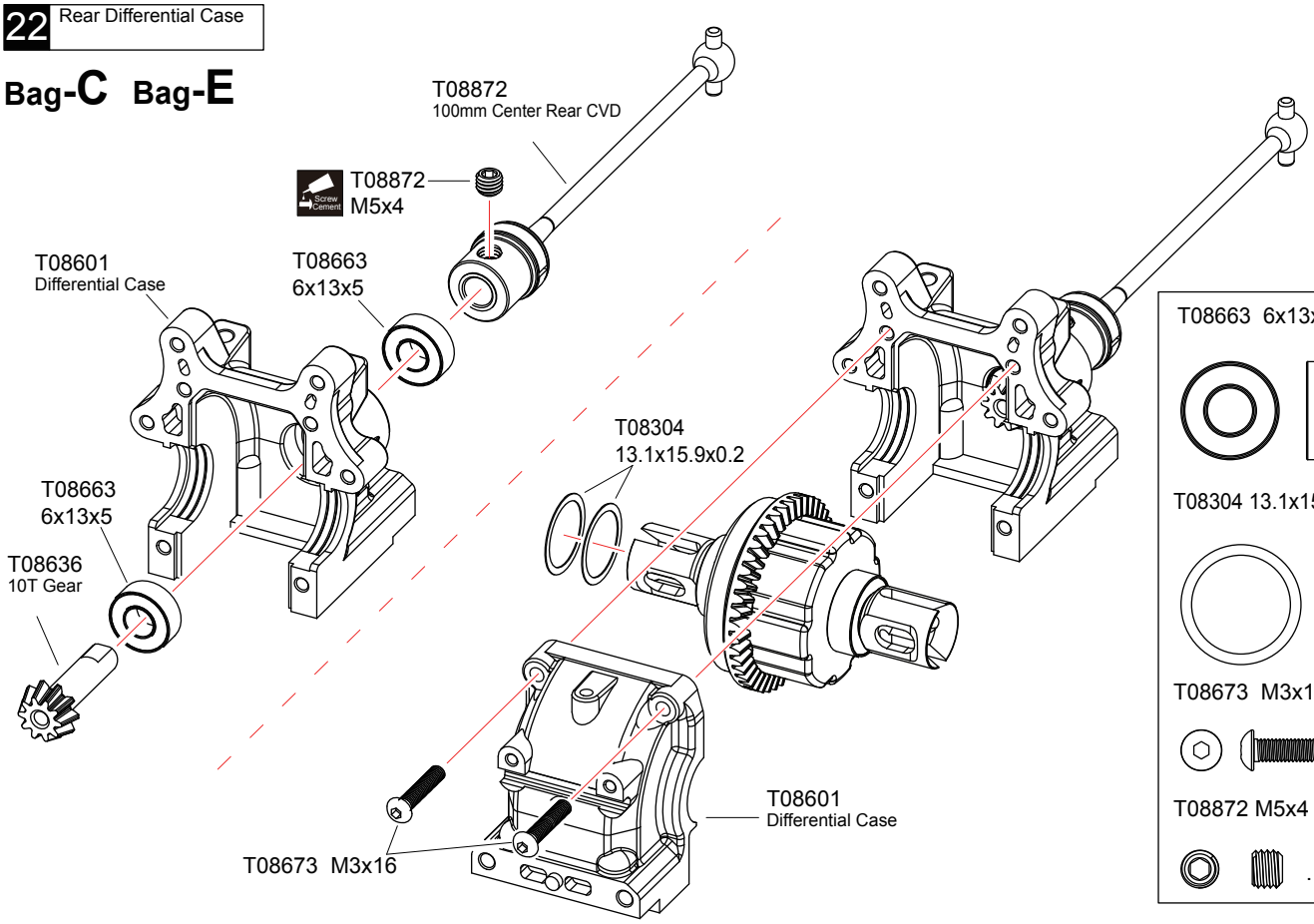

T08663 6x13x5 Ball Bearing

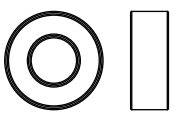

.....2

T08304 13.1x15.9x0.2 Washer

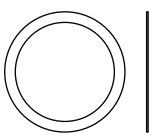

.....2

T08673 M3x16 Screw

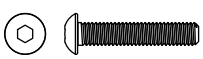

.....2

T08872 M5x4 Screw

.....1

Apply threadlocker(screw cement)

23 Rear Swaybar

Bag-E

T08601/T08756 M3x3 Screw 4

T08601 M2.5x8 Screw 3

T08756 6.8 Ball stud-Swaybar 2

T08755 6.8 Ball stud-Swaybar 2

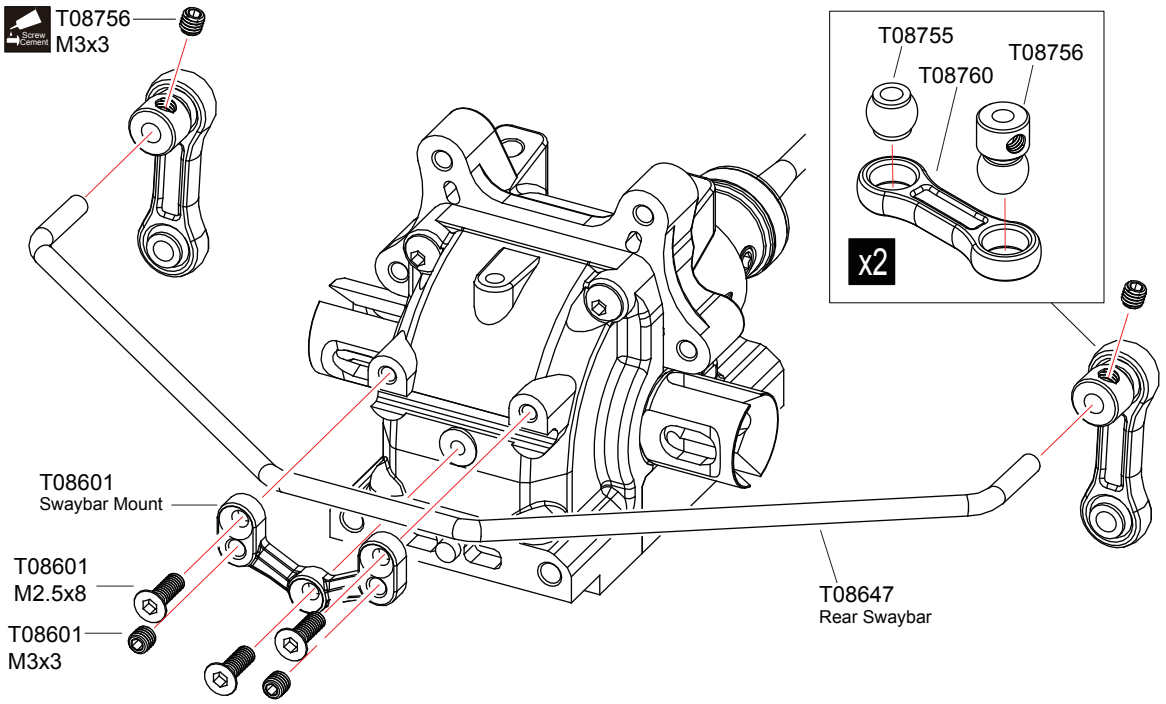

24 Rear Hub Carrie

Bag-E

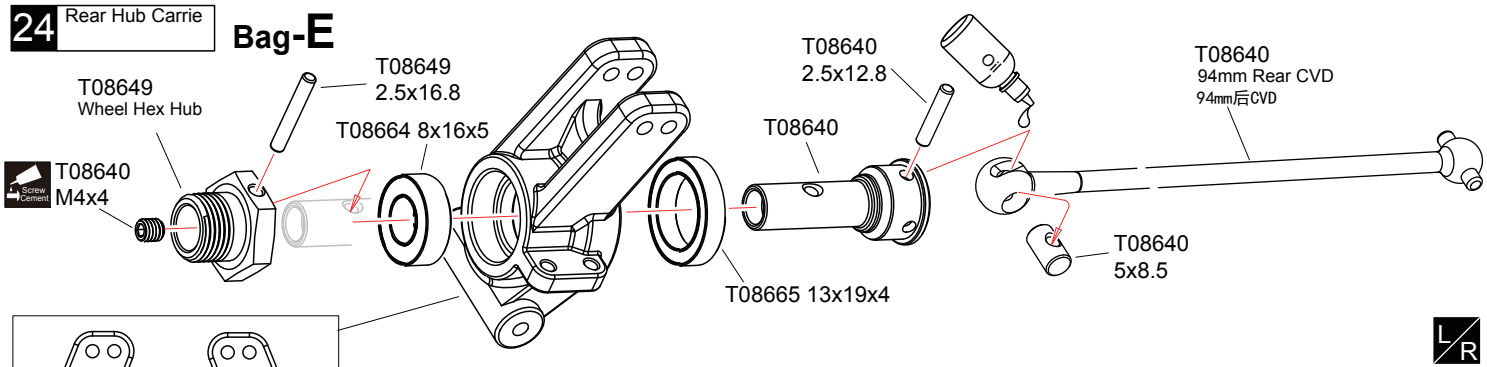

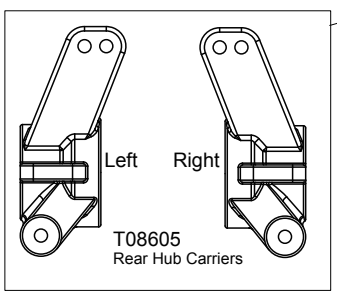

T08664 8x16x5 Ball Bearing 2

T08665 13x19x4 Ball Bearing 2

T08640 2.5x12.8 Pin 2

T08640 5x8.5 CVD Shaft 2

T08649 2.5x16.8 Pin 2

T08640 M4x4 Screw 2

25 Rear Hub Carrie

Bag-E

T08666 M3 Nylon Nut 2

T08675 M4x10 Screw 2

T08605 3.1x9x2.5 Plastic Washer 4

T08646 3x51.5 Arm Pin 2

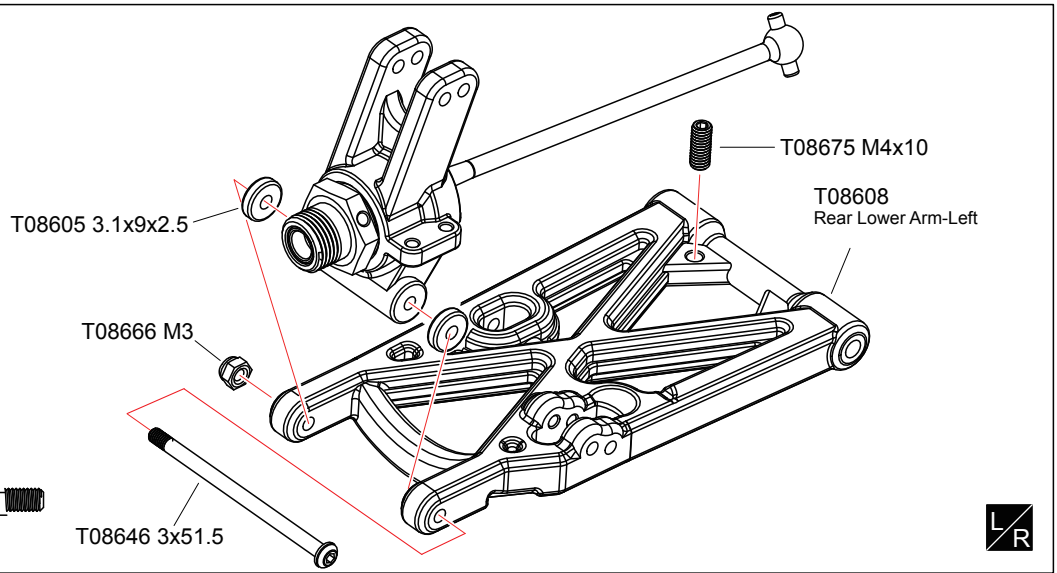

Apply threadlocker(screw cement) | L/R Assemble both Left and Right | x2 Assemble as many times as specified

26 Rear Suspension Bag-E

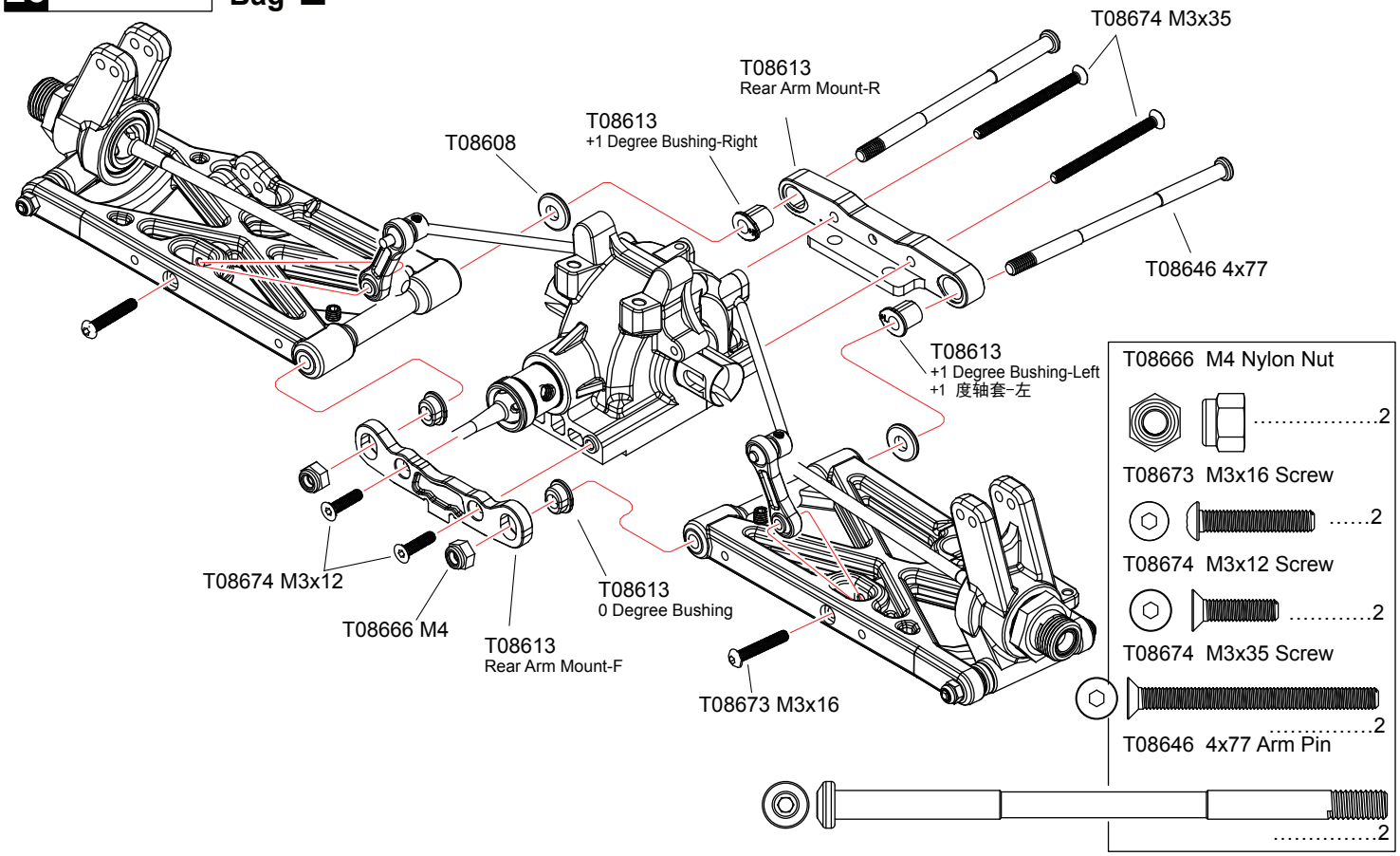

27 Rear Shock Tower Bag-E

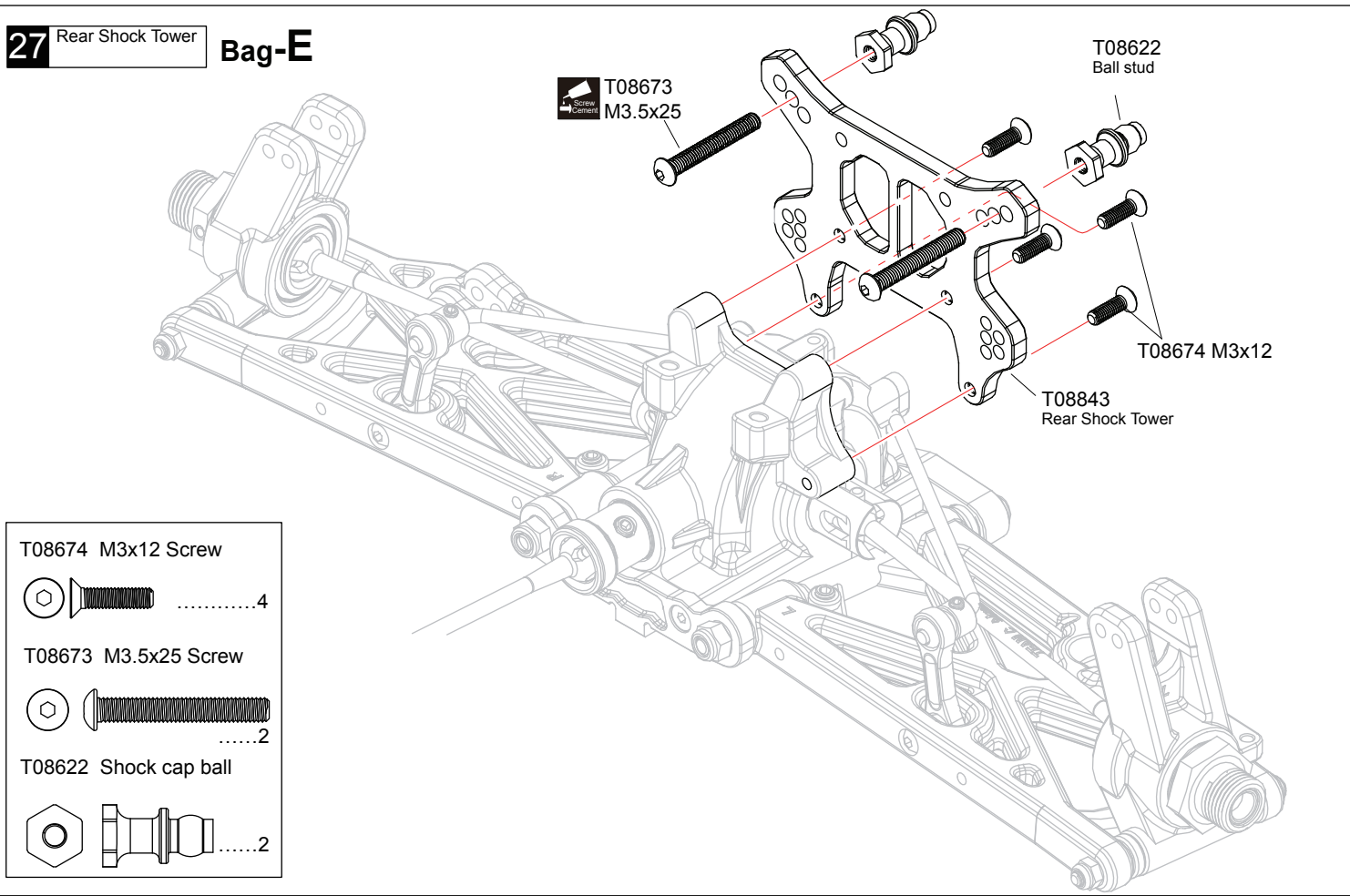

Apply threadlocker(screw cement)

28 Rear Upper Turnbuckle

Bag-E

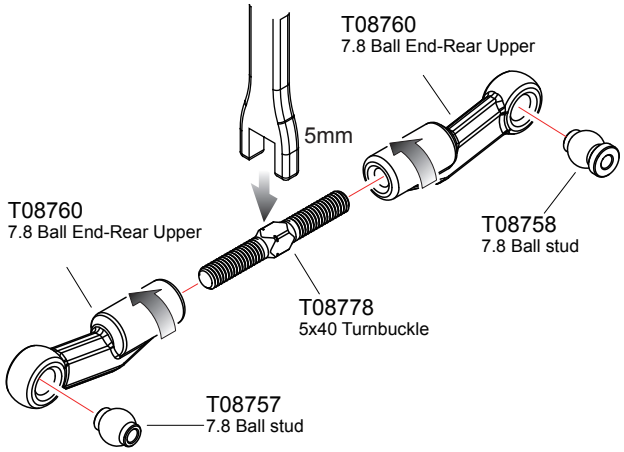

1:1 x1 Rear Upper-Left

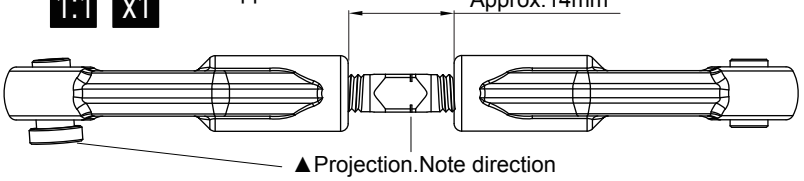

1:1 x1 Rear Upper-Right

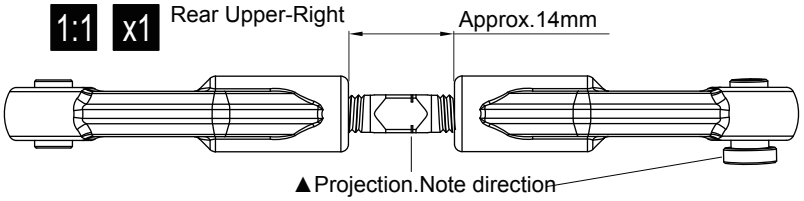

T08778 5x40 Turnbuckle	T08760 7.8 Ball End-Rear Upper	T08758 7.8 Ball stud	T08757 7.8 Ball stud
.....2	4	2	2

29 Rear Upper Turnbuckle

Bag-E

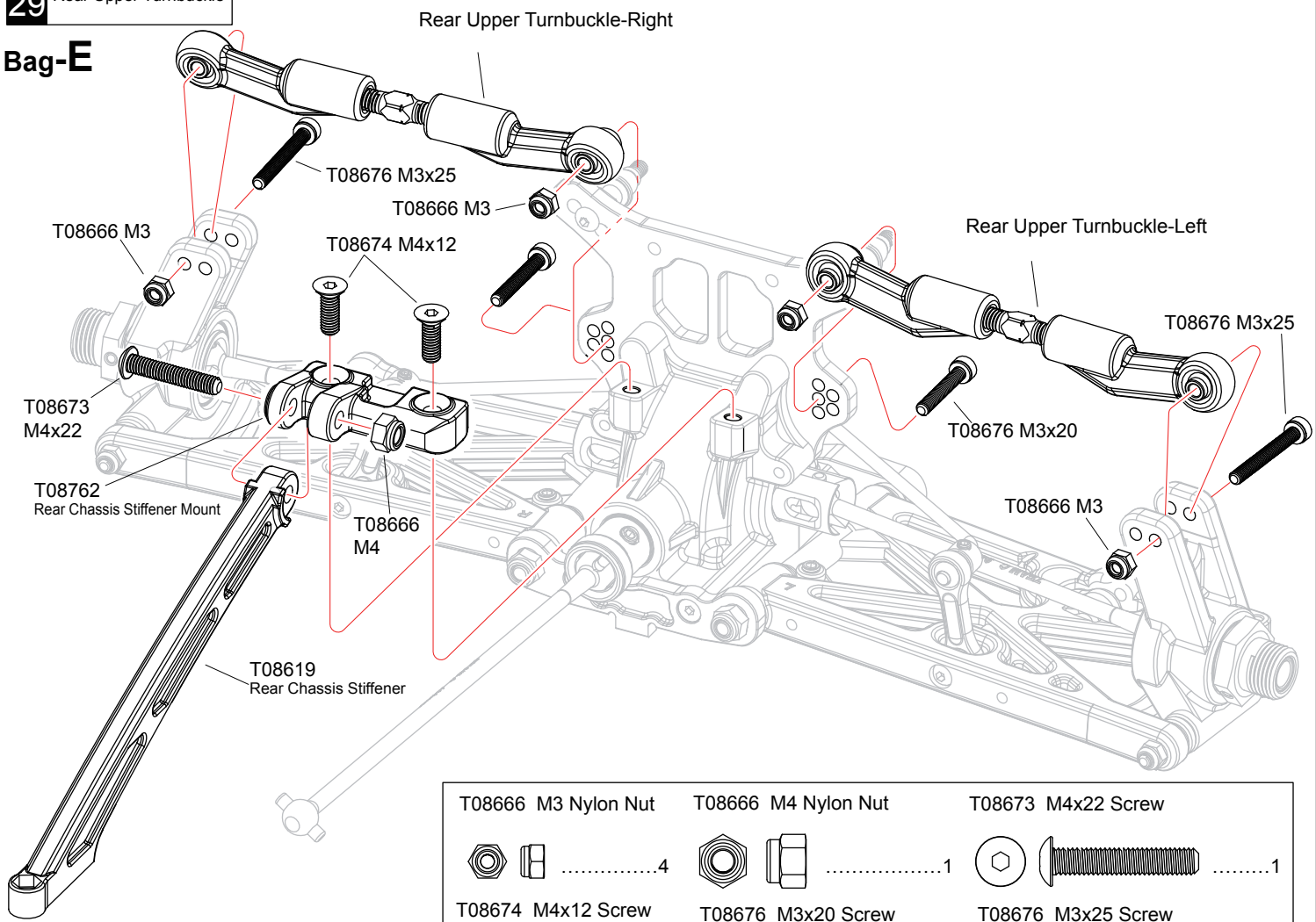

T08666 M3 Nylon Nut	T08666 M4 Nylon Nut	T08673 M4x22 Screw
.....4	1	1
T08674 M4x12 Screw	**T08676 M3x20 Screw**	**T08676 M3x25 Screw**
.....2	2	2

1:1 True-to -scale diagram

x1 Assemble as many times as specified

30 Rear Suspension Bag-E

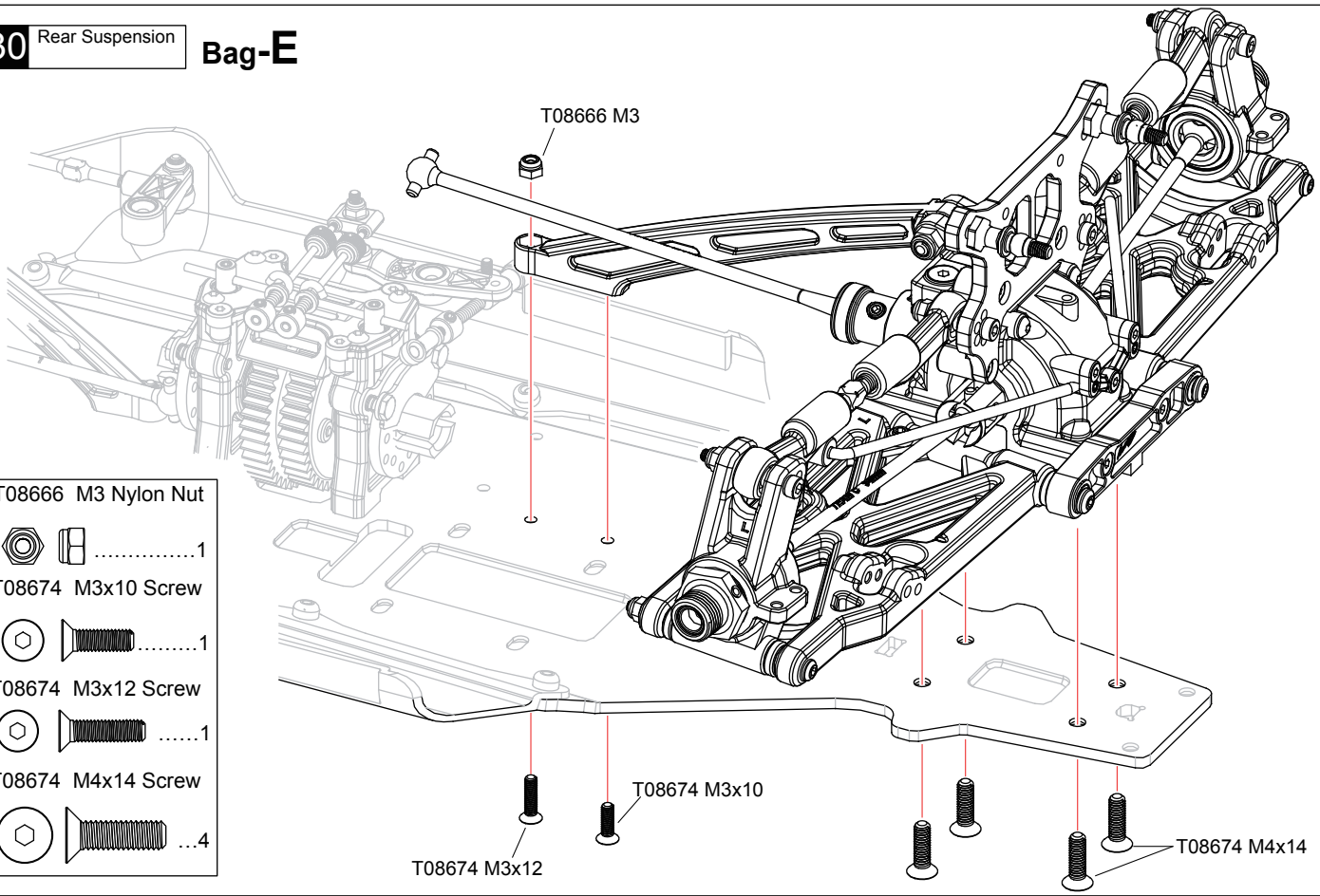

T08666 M3 Nylon Nut	1
T08674 M3x10 Screw	1
T08674 M3x12 Screw	1
T08674 M4x14 Screw	4

31 Shock Bag-F

F/R x2

T08627 2.75mm Plastic Washer	4
T08627 1mm Plastic Washer	4
T08627 3.3x1.9 O-ring	8
T08844/T08625 9x1.0 O-ring	4
T08845 2.7x5.8x0.5 Washer	4
T08845 M2.5 Nylon Nut	4
T08622 6.8 Ball stud	4
T08622 6.8 Ball End	4

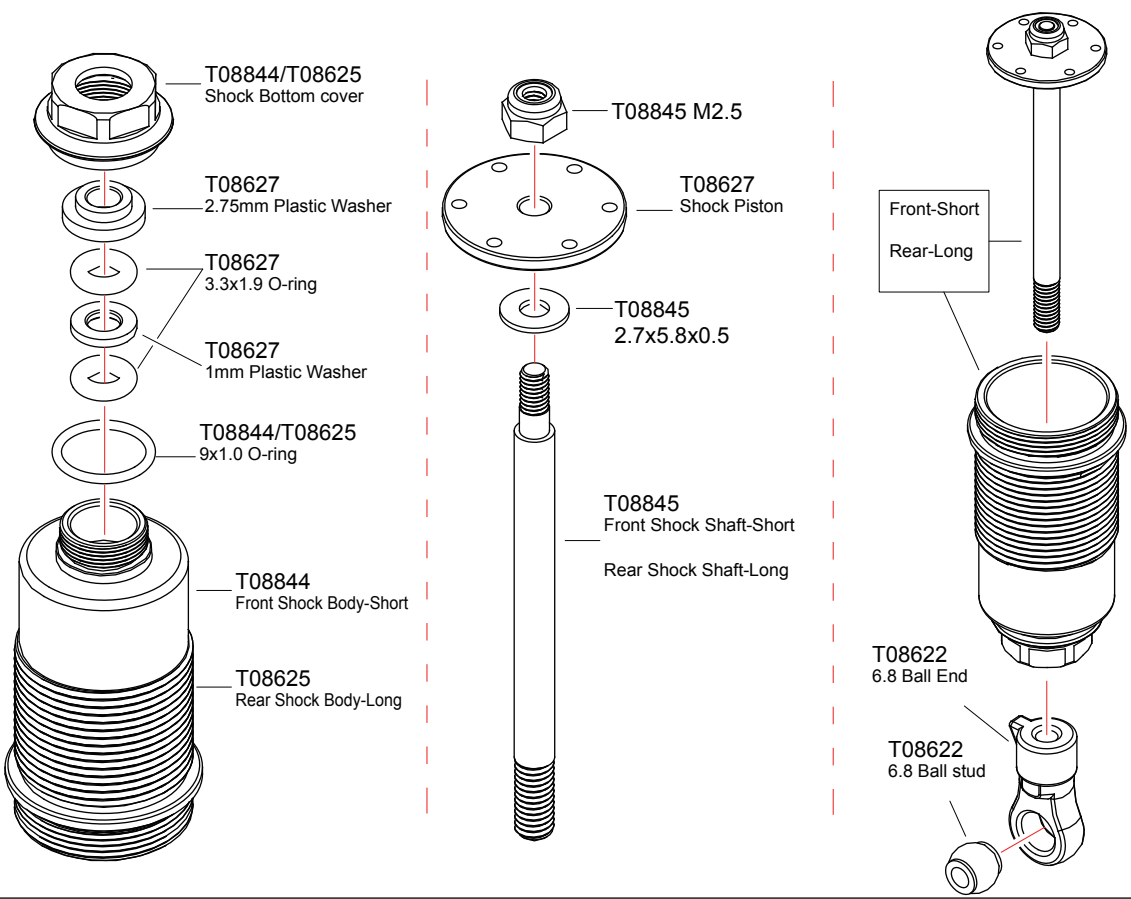

F/R Assemble both Front and Rear

x2 Assemble as many times as specified

32 Shock

Bag-F

F/R x2

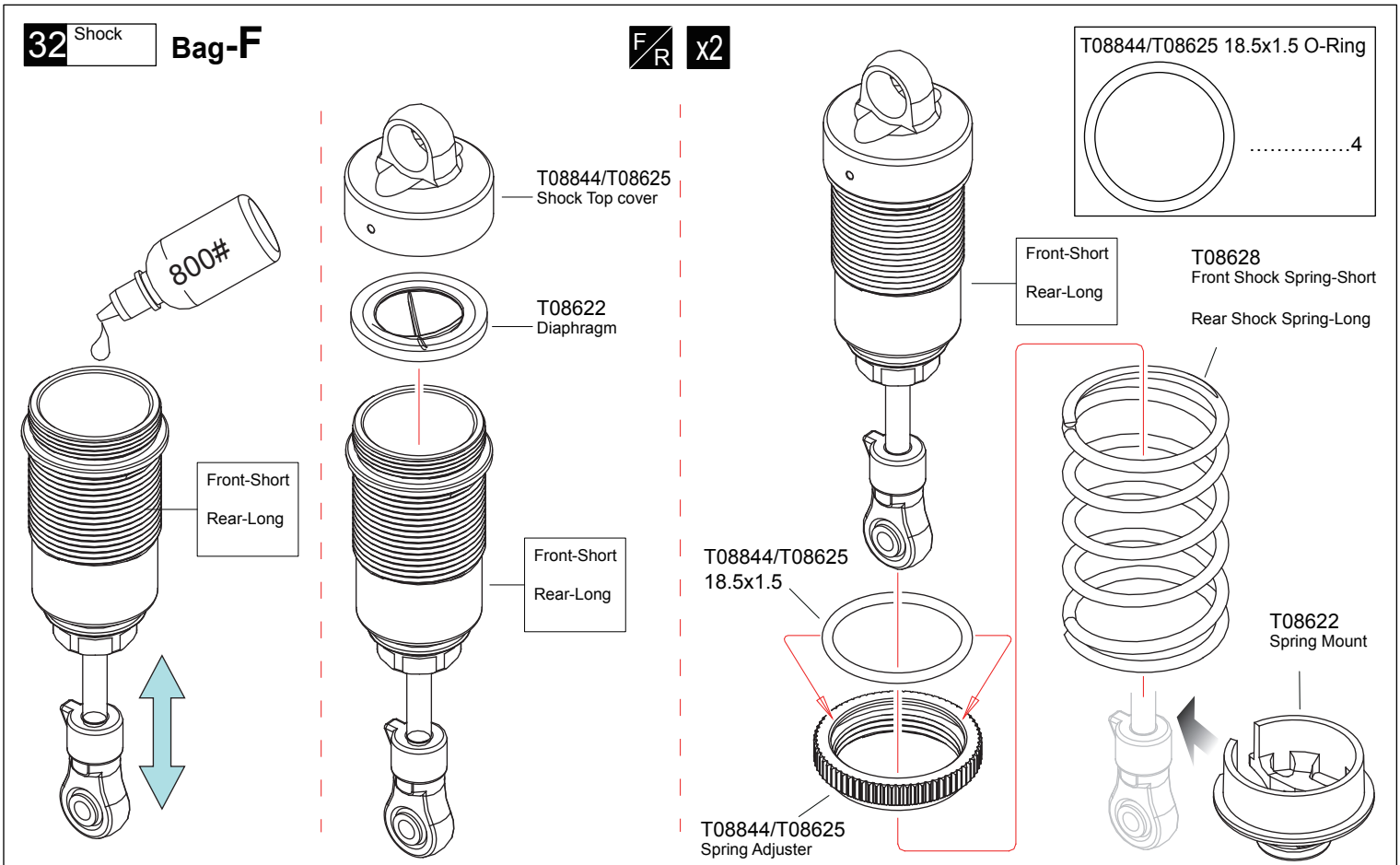

33 Front Shock

Bag-F

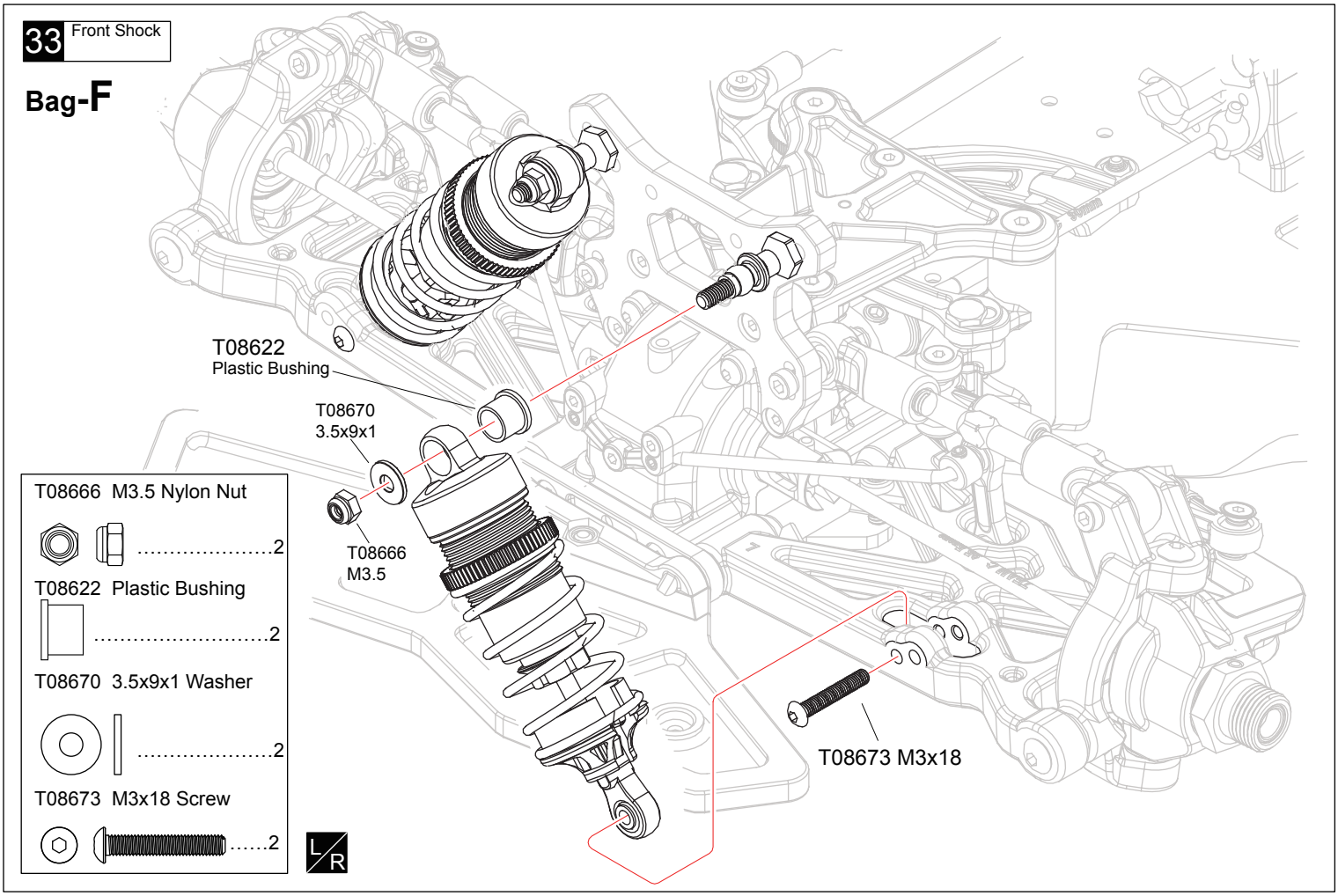

F/R Assemble both Front and Rear

x2 Assemble as many times as specified

34 Rear Shock

Bag-F

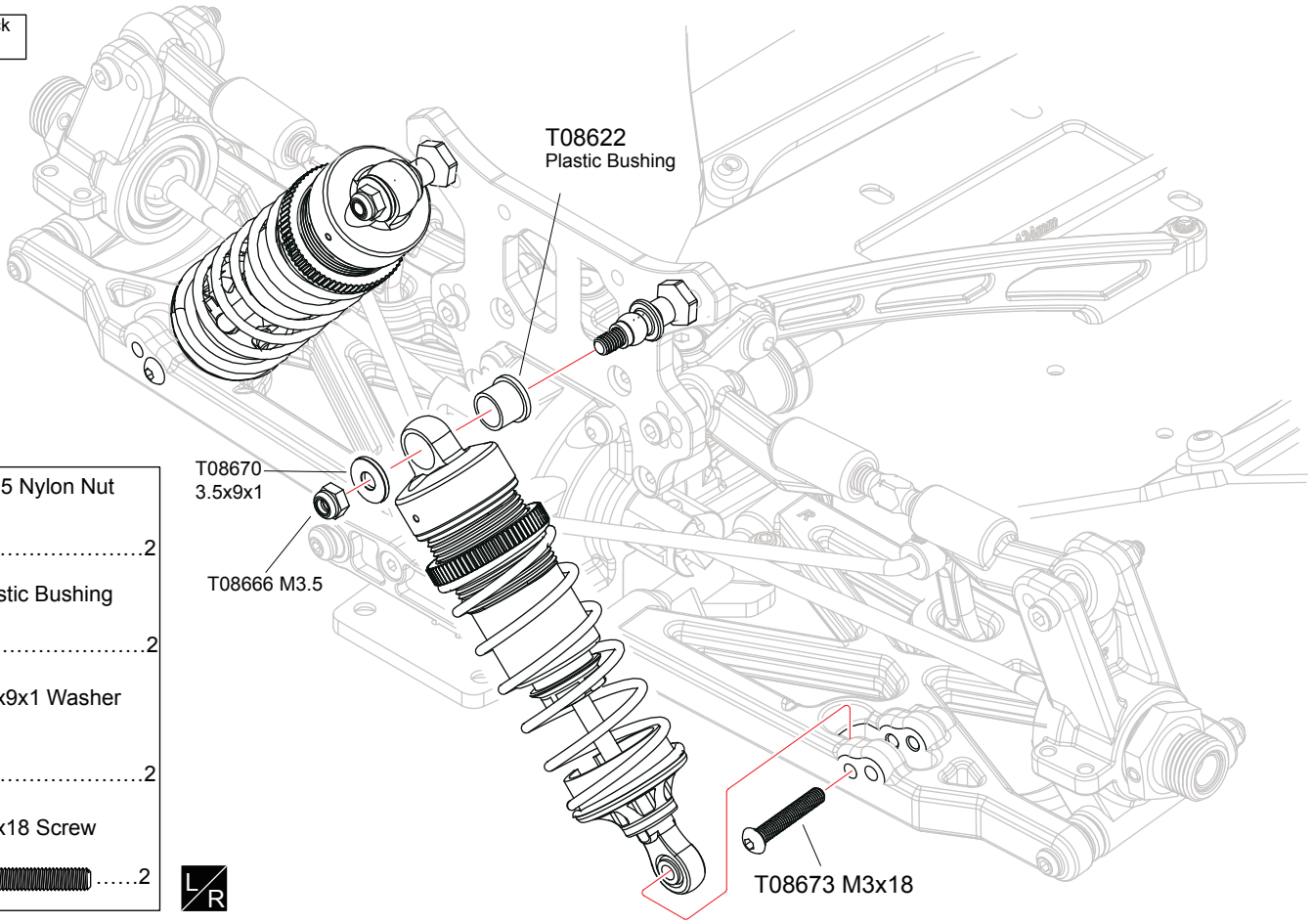

T08666 M3.5 Nylon Nut 2

T08622 Plastic Bushing 2

T08670 3.5x9x1 Washer 2

T08673 M3x18 Screw 2

L/R

35 Front Bumper

Bag-I

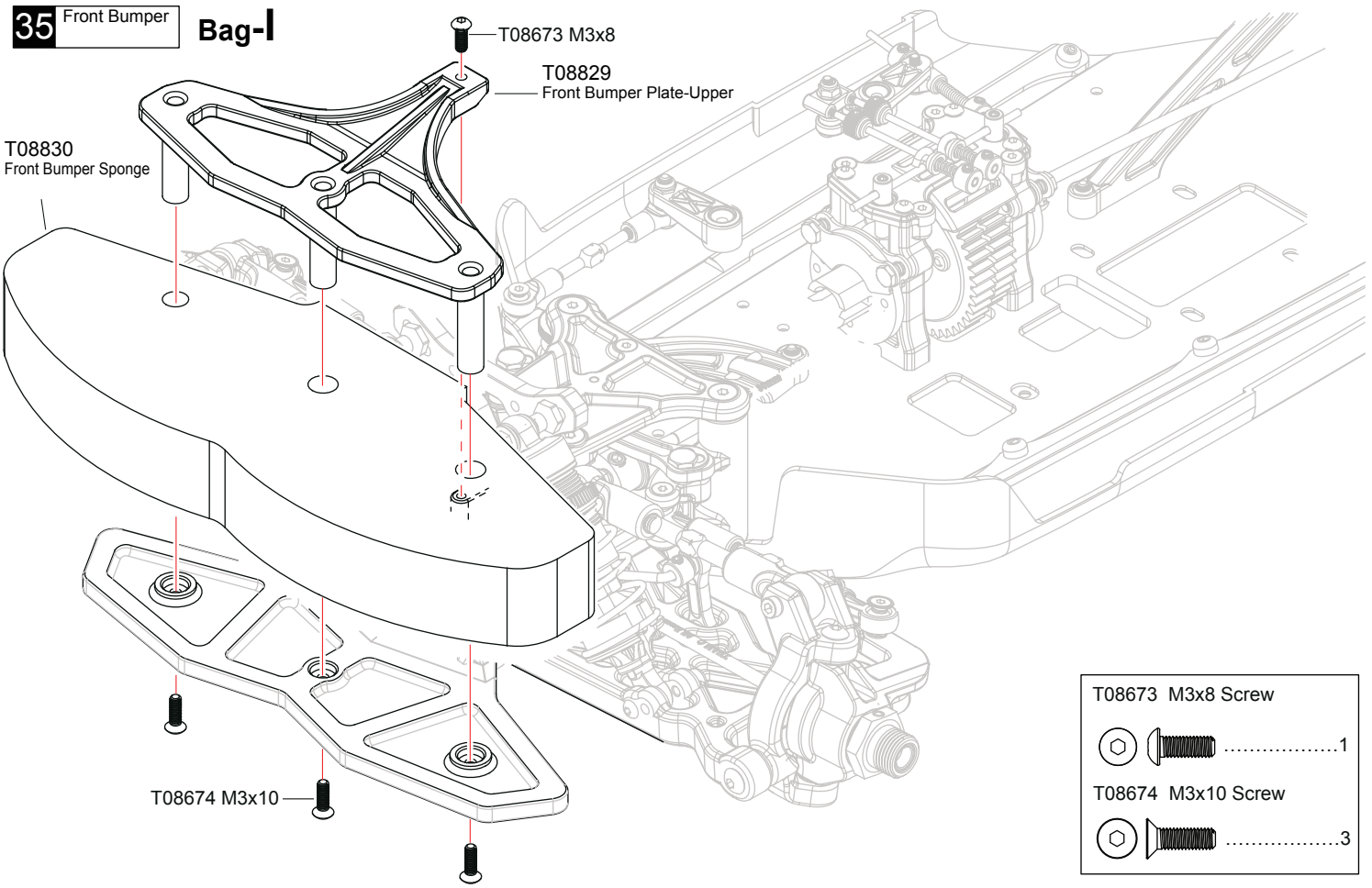

T08673 M3x8 Screw 1

T08674 M3x10 Screw 3

L/R Assemble both Left and Right

36 Rear Bumper Plate Bag-I

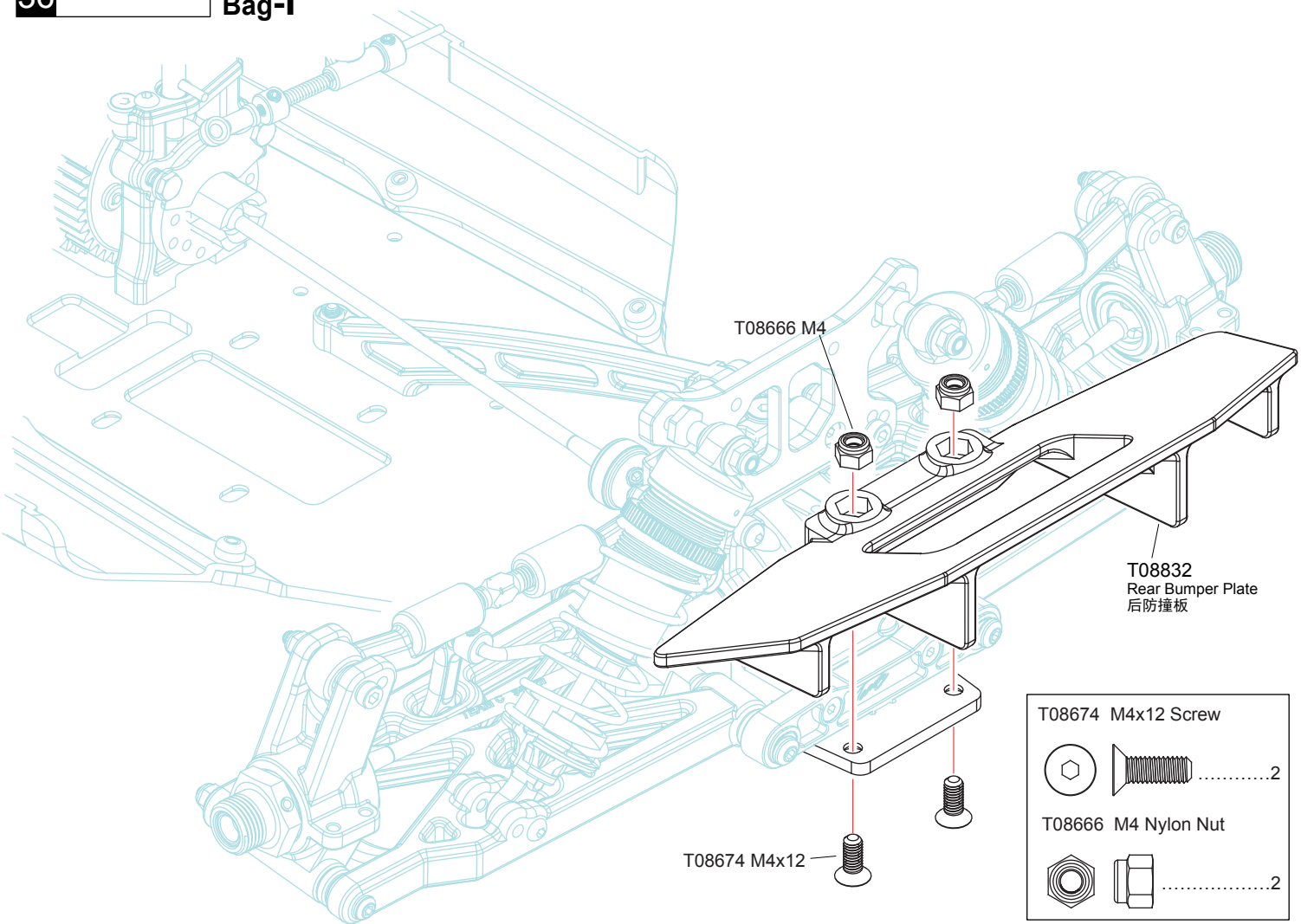

37 Body Mount Bag-I

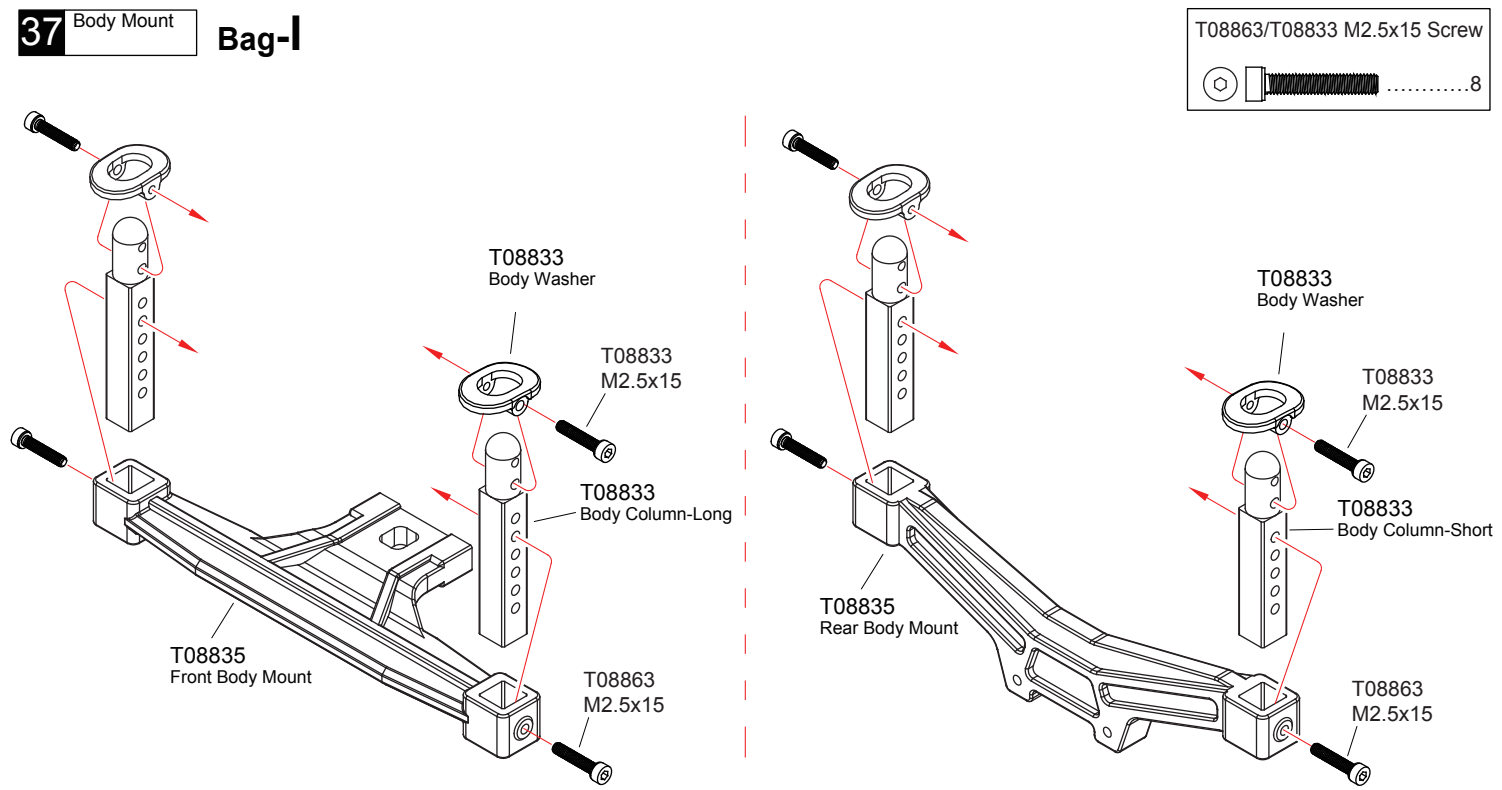

38 Front Body Mount

Bag-I

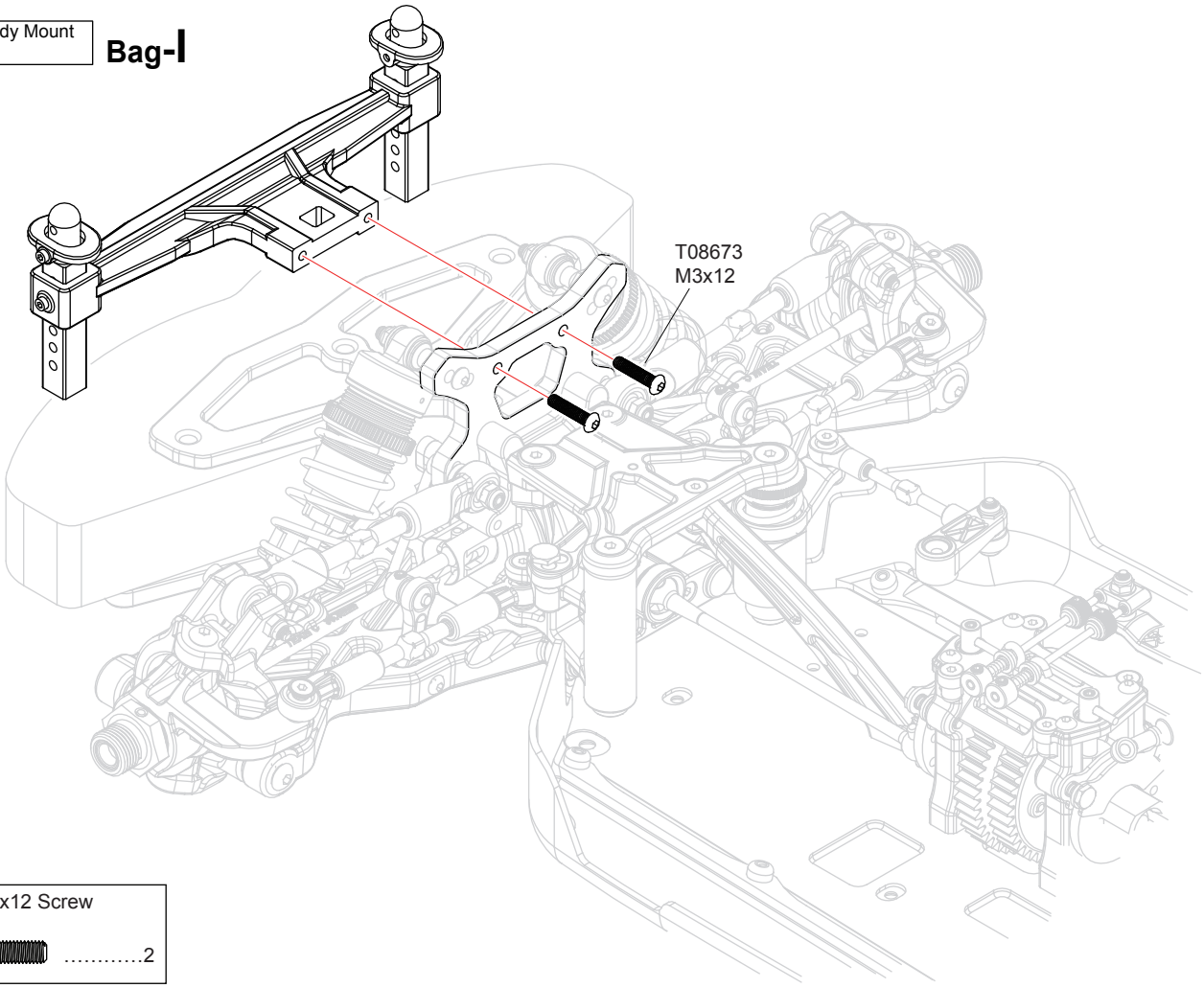

T08673 M3x12 Screw

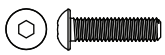

.....2

39 Rear Body Mount

Bag-I

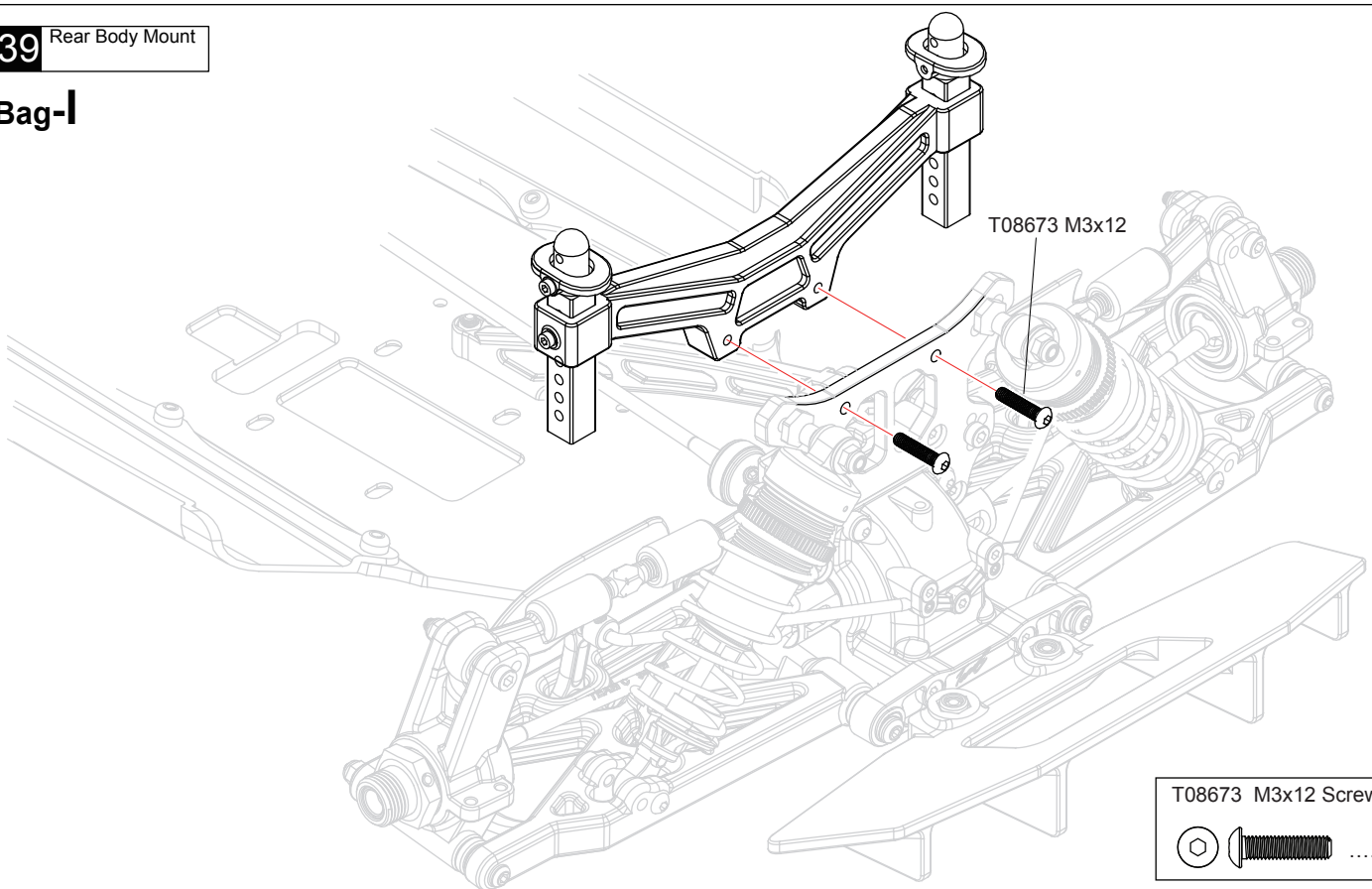

T08673 M3x12 Screw

.....2

40 Radio Plate Bag-B

T08673 M3x8 Screw 4

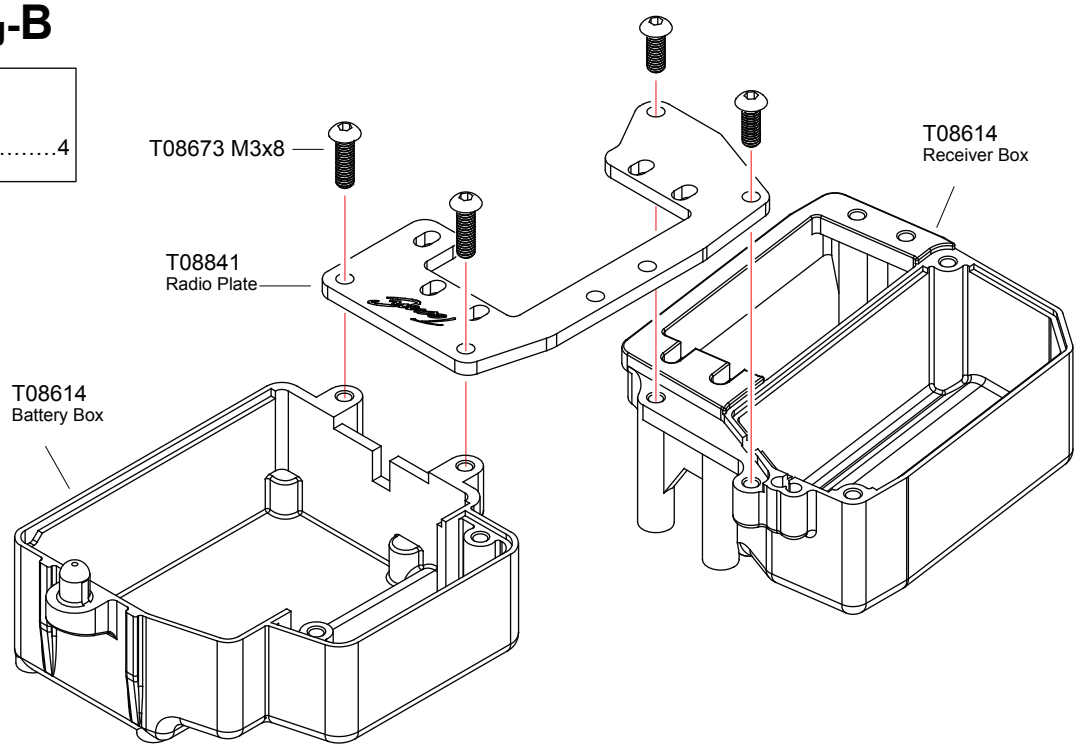

41 Servo Bag-B

T08793 M3x15 Screw 8

T02081 3x7x0.8 Washer 8

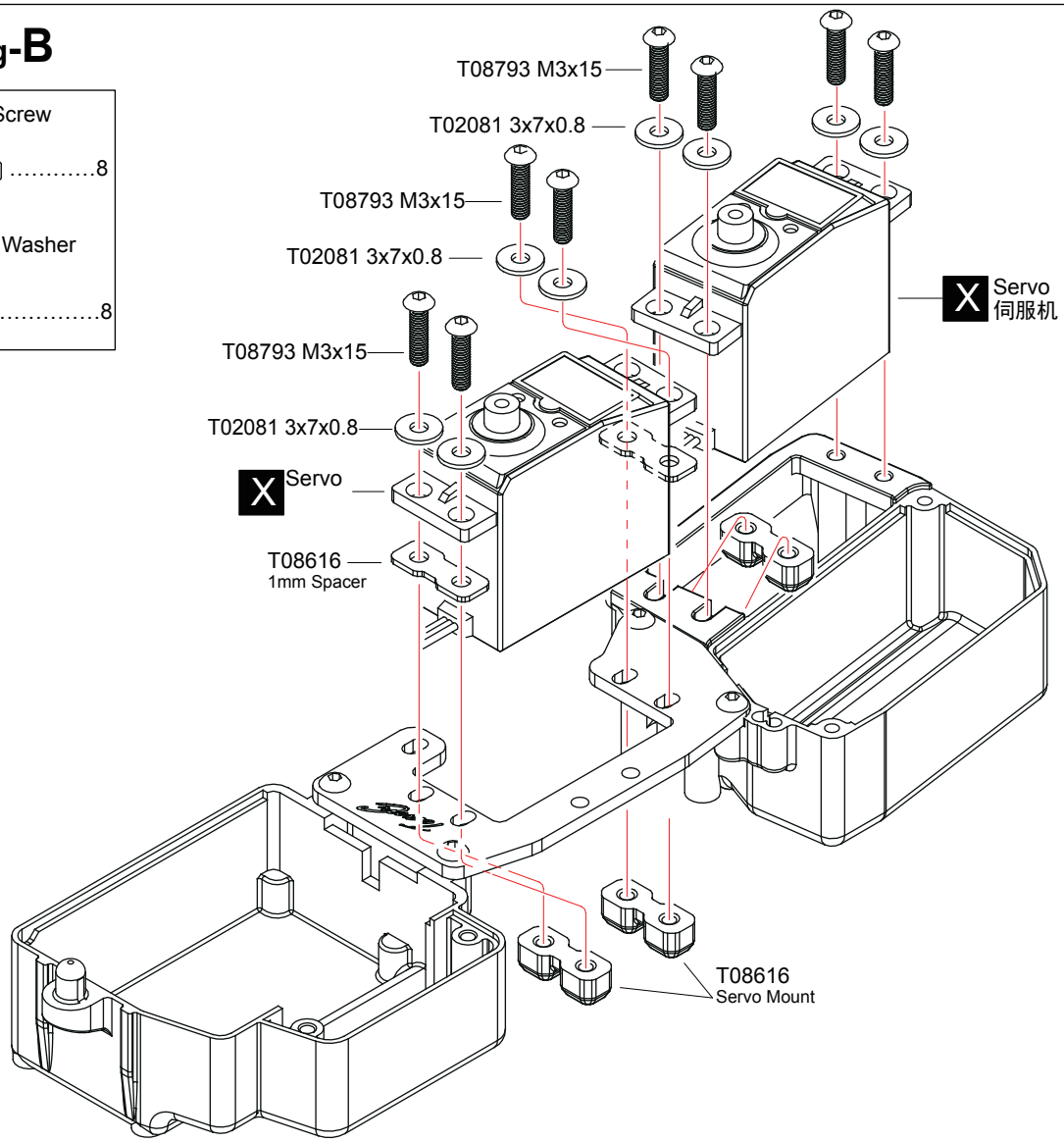

X Must be purchased separately

42 Servo / Battery / Receiver

Bag-B Bag-L

T08673 M3x5 Screw	3
T08673 M3x8 Screw	3
T08673 M3x10 Screw	2
T08674 M3x8 Screw	1
T08675 M3x5 Screw	1
T08660 Small Clip	1

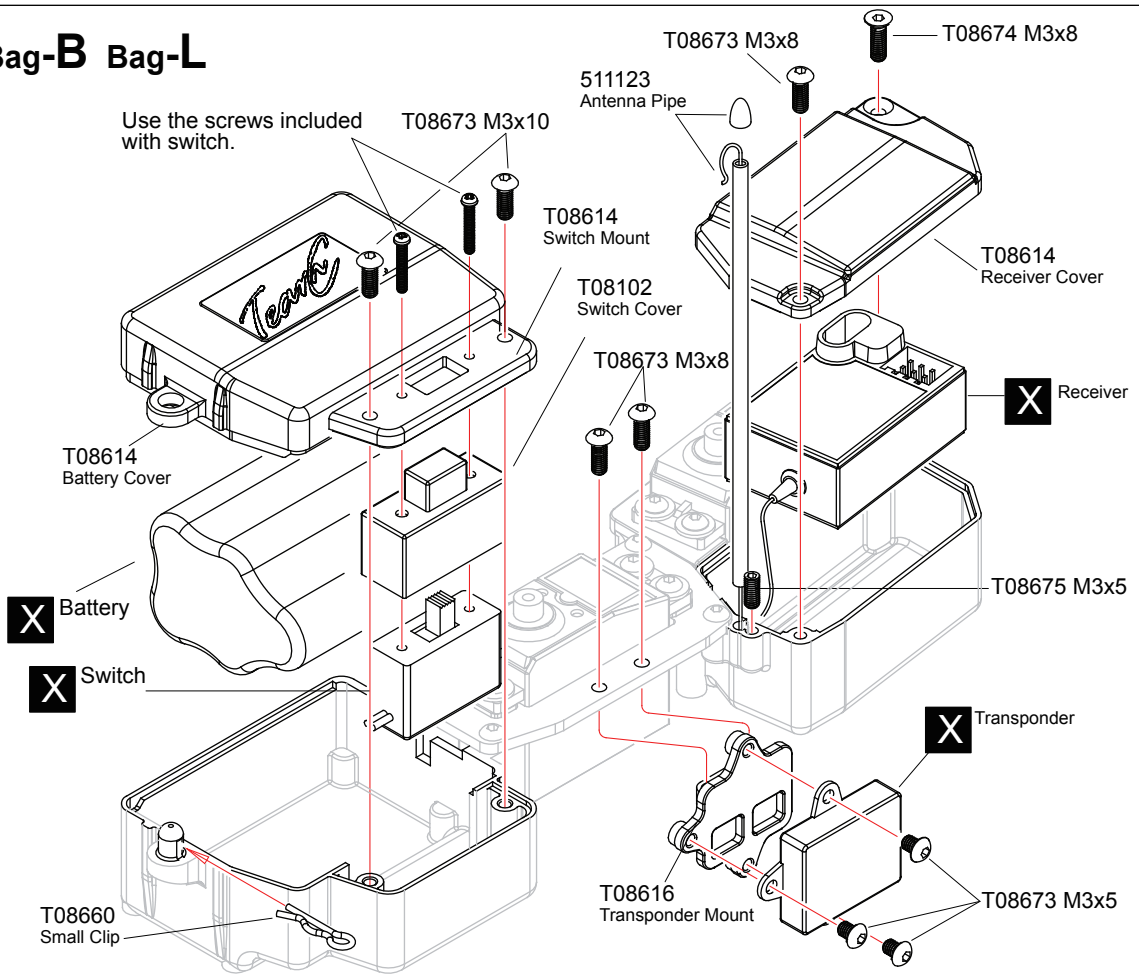

43 Servo / Battery / Receiver

Bag-B

T08674 M3x10 Screw	8
T08673 M3x10 Screw	1

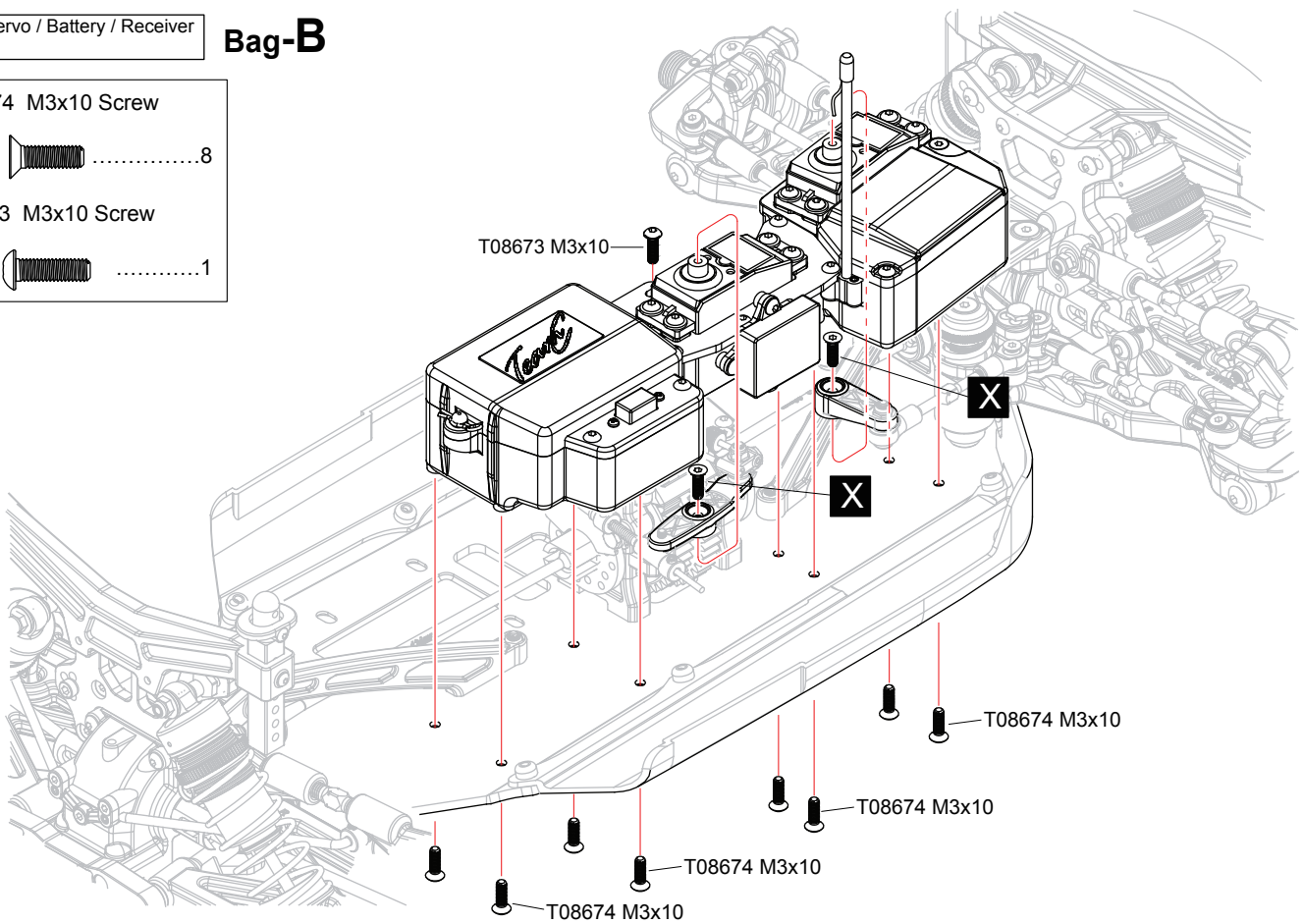

X Must be purchased separately

44 Fueltank Bag-G

TG8008 M3x12 Screw 2

TG8008 3x7x0.8Washer 2

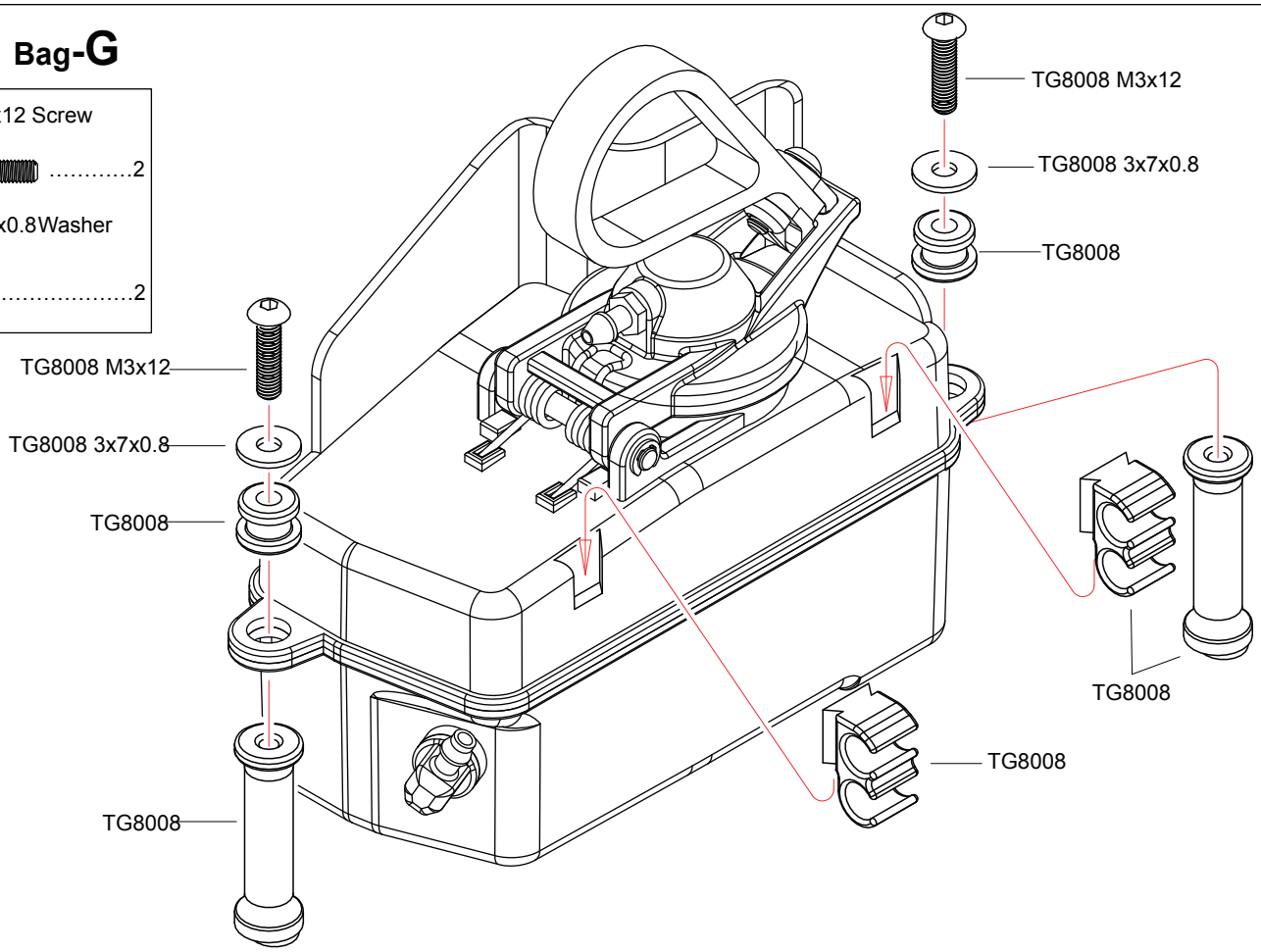

45 Fueltank Bag-G

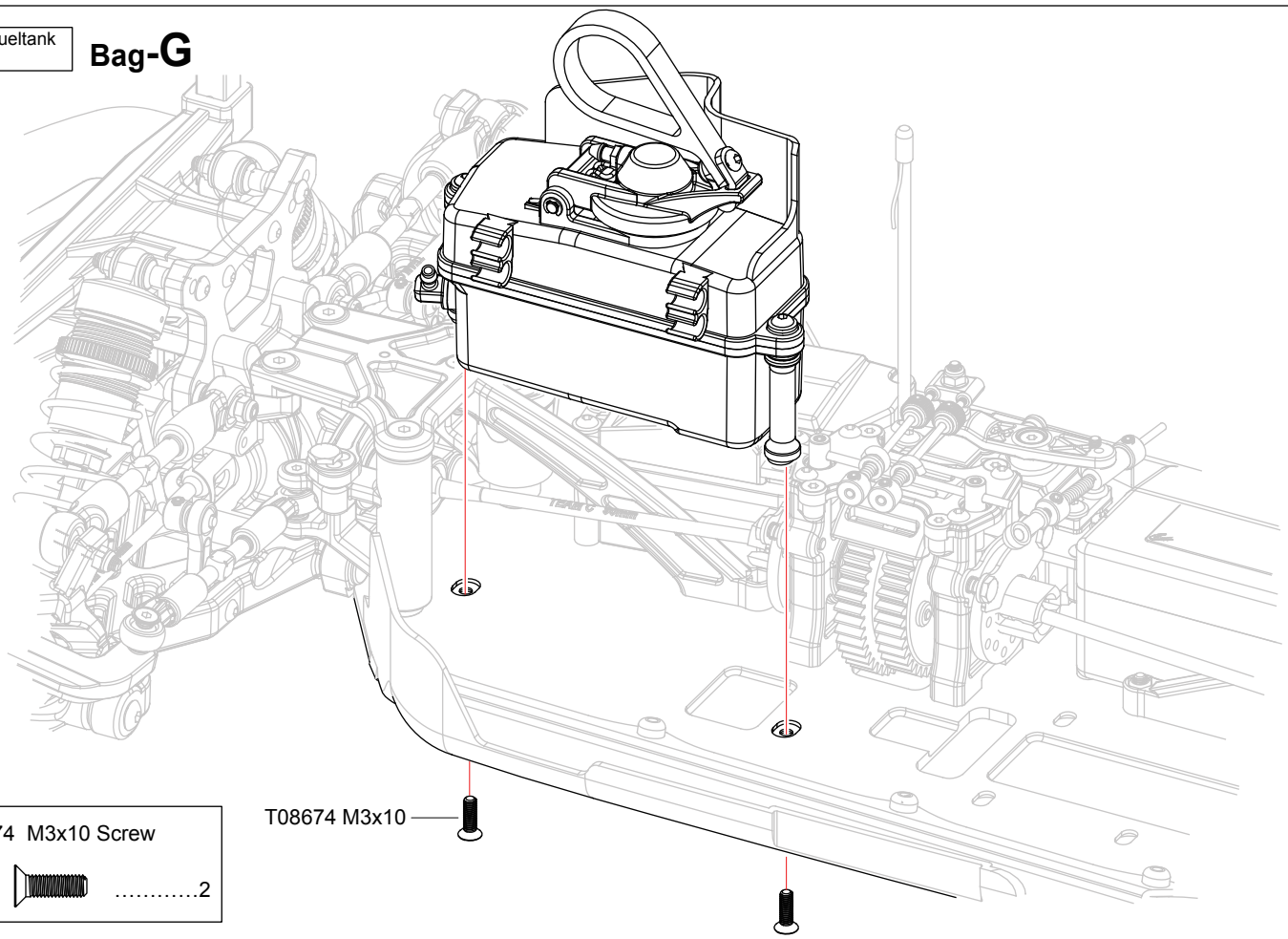

T08674 M3x10 Screw 2

46 Engine Bag-H

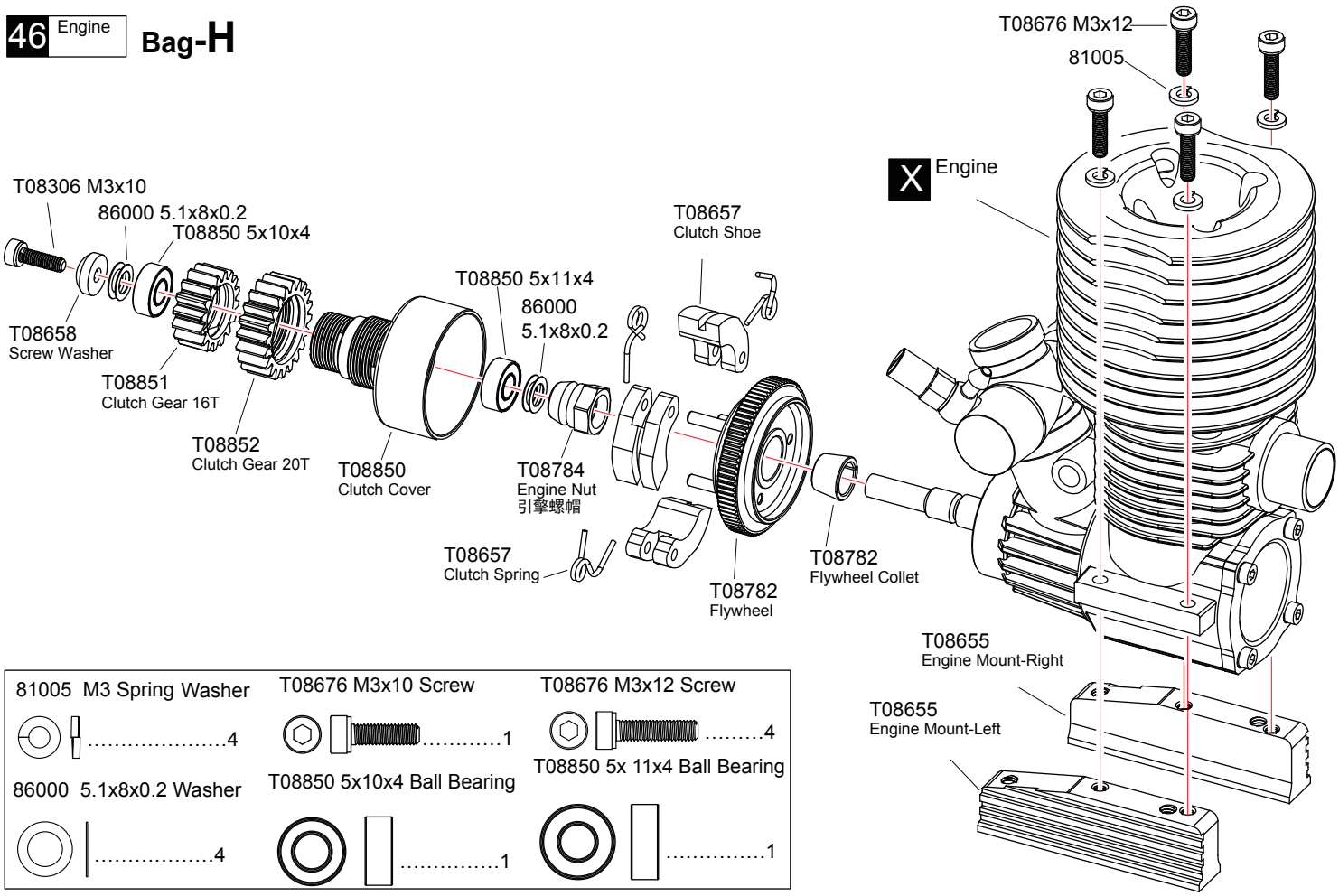

81005 M3 Spring Washer ……4	T08676 M3x10 Screw ……1	T08676 M3x12 Screw ……4
86000 5.1x8x0.2 Washer ……4	T08850 5x10x4 Ball Bearing ……1	T08850 5x 11x4 Ball Bearing ……1

47 Air Filter Bag-H

T08621 M3x8 Screw ……1

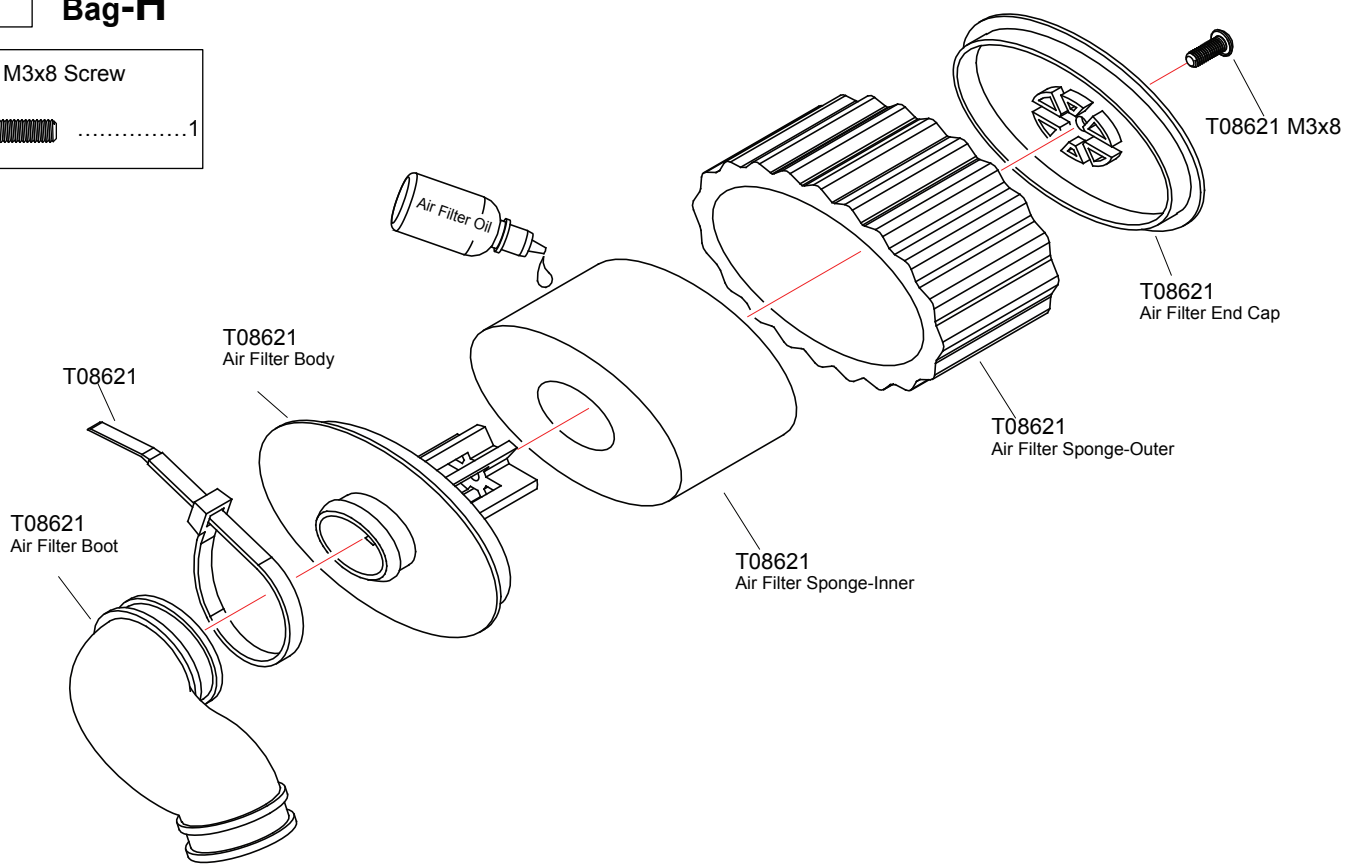

X Must be purchased separately

48 Air Filter/Tunedpipe

Bag-H

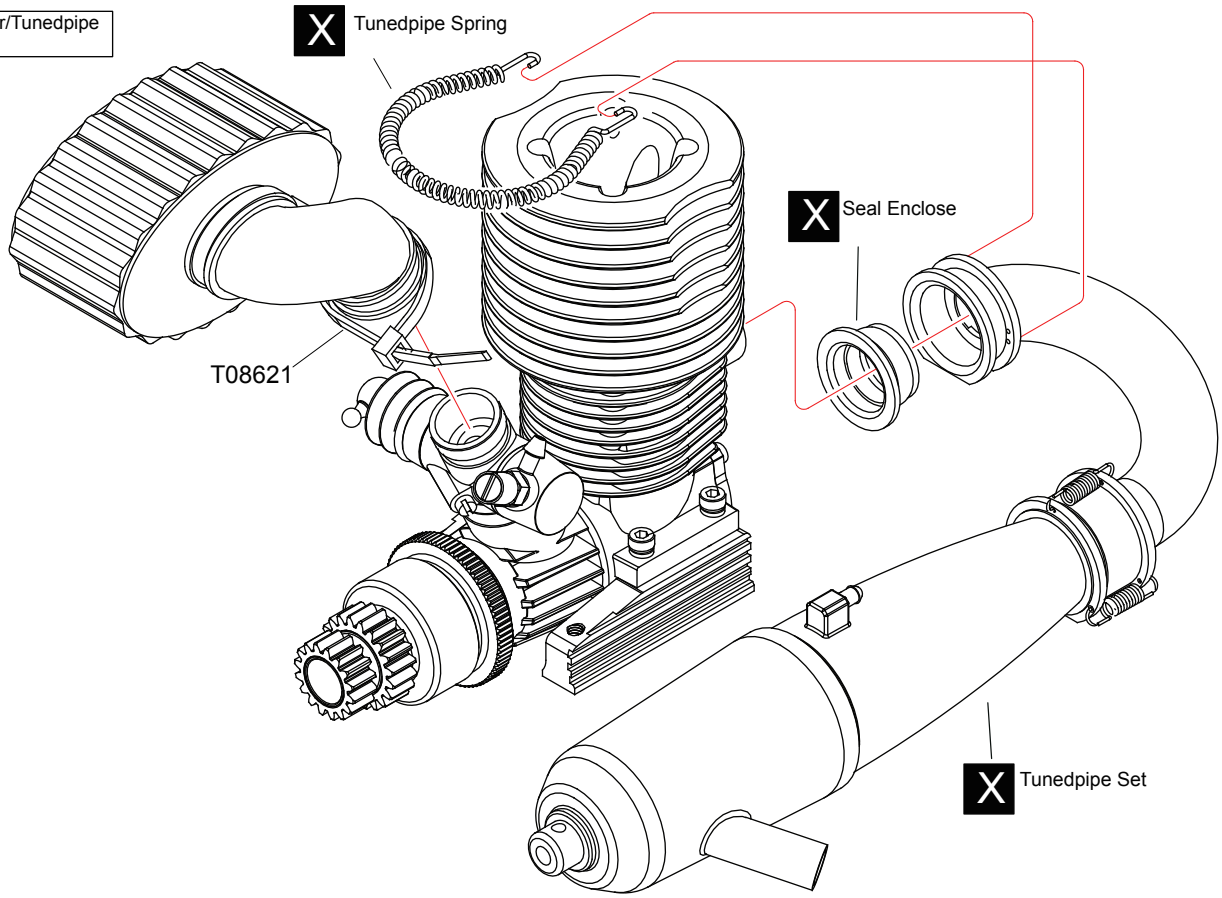

49 Engine

Bag-H

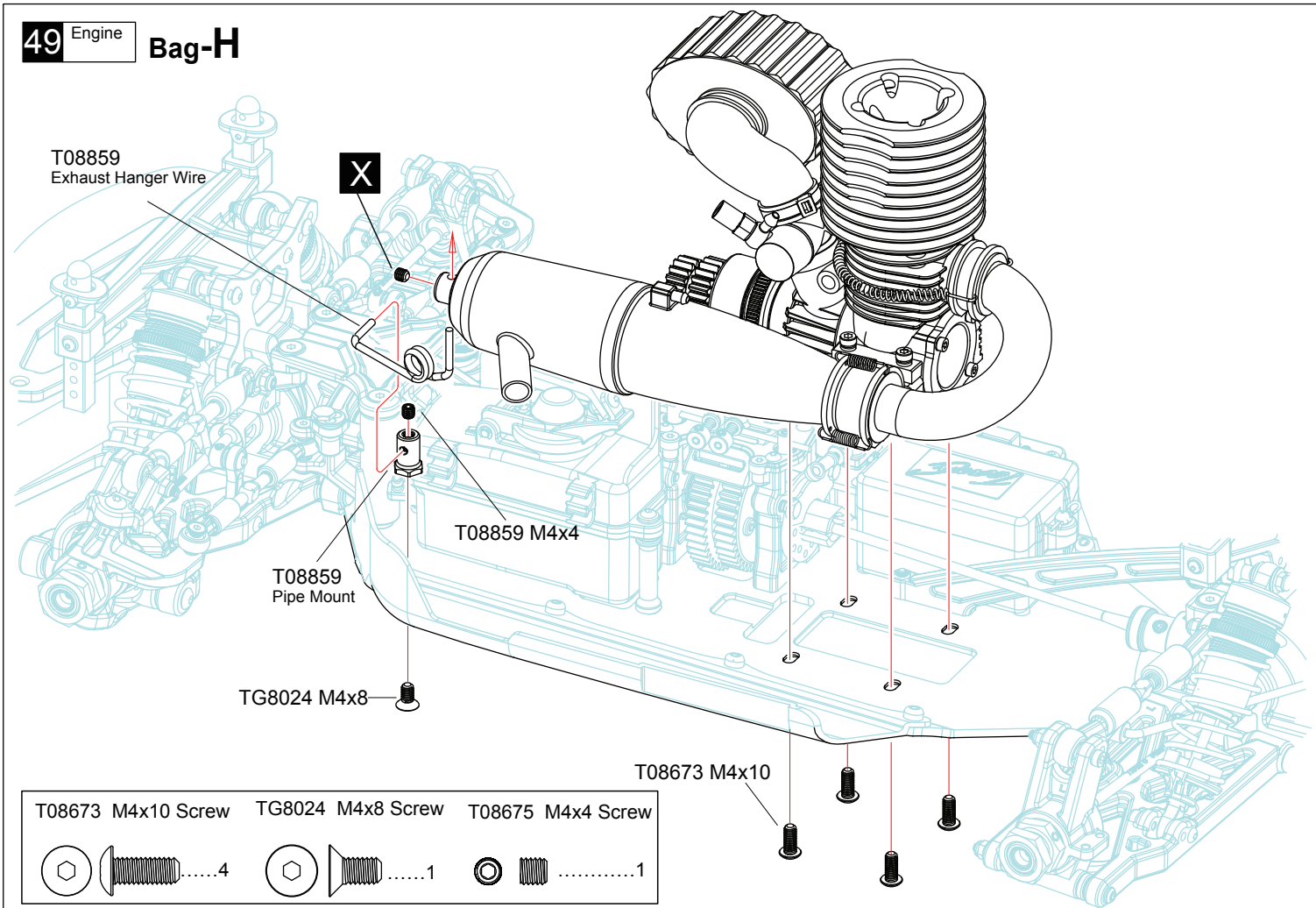

X Must be purchased separately

50 Oil Pipe Bag-H

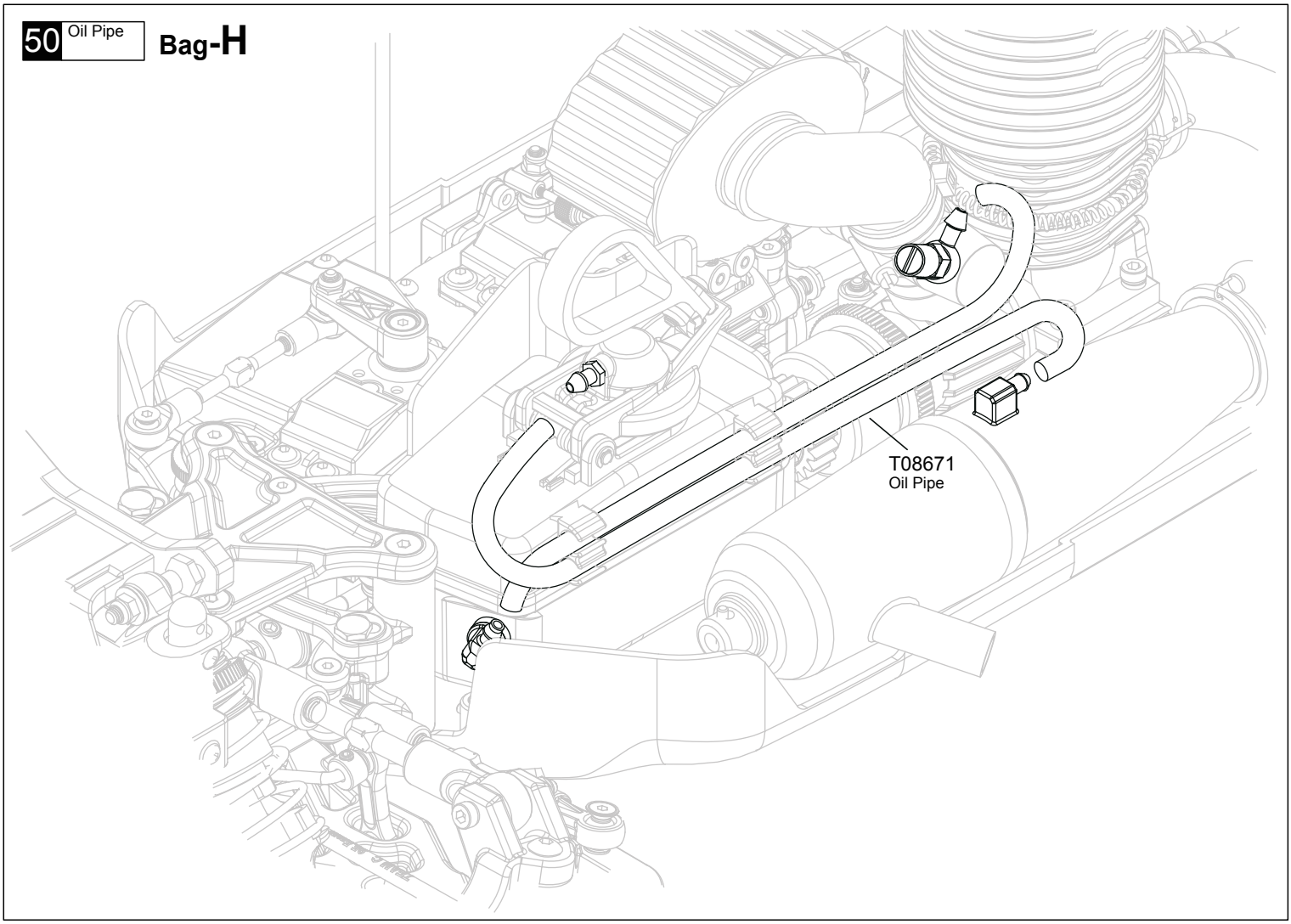

51 Tyre Bag-J

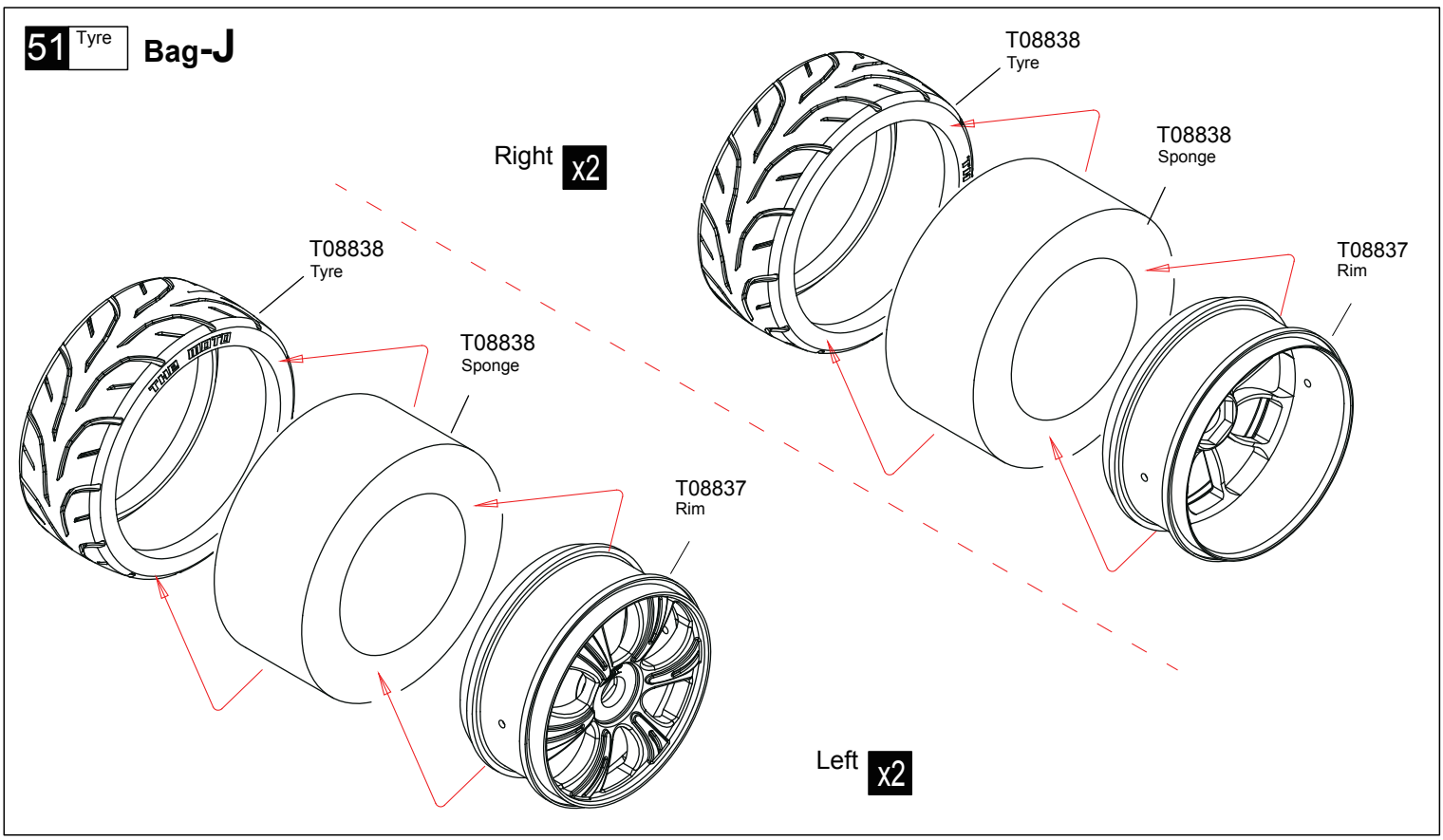

x2 Assemble as many times as specified

52 Tyre Bag-J

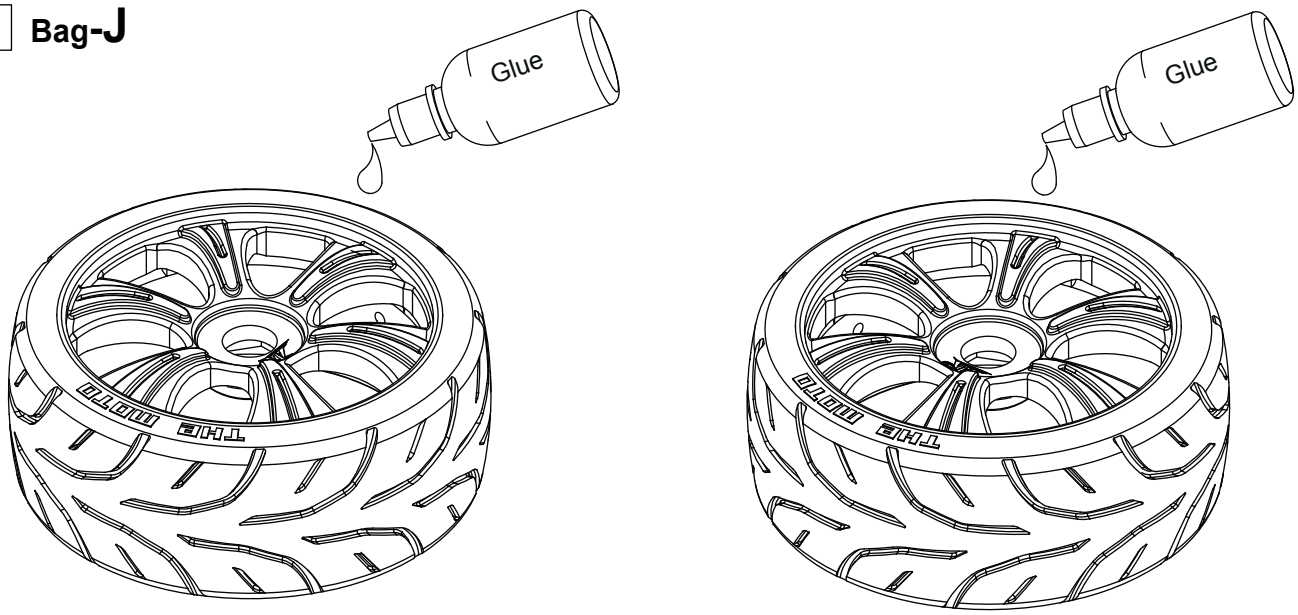

Left 左 x2

Right 右 x2

53 Tyre Bag-D Bag-E

T08649 17mm Hex Nut

.....4

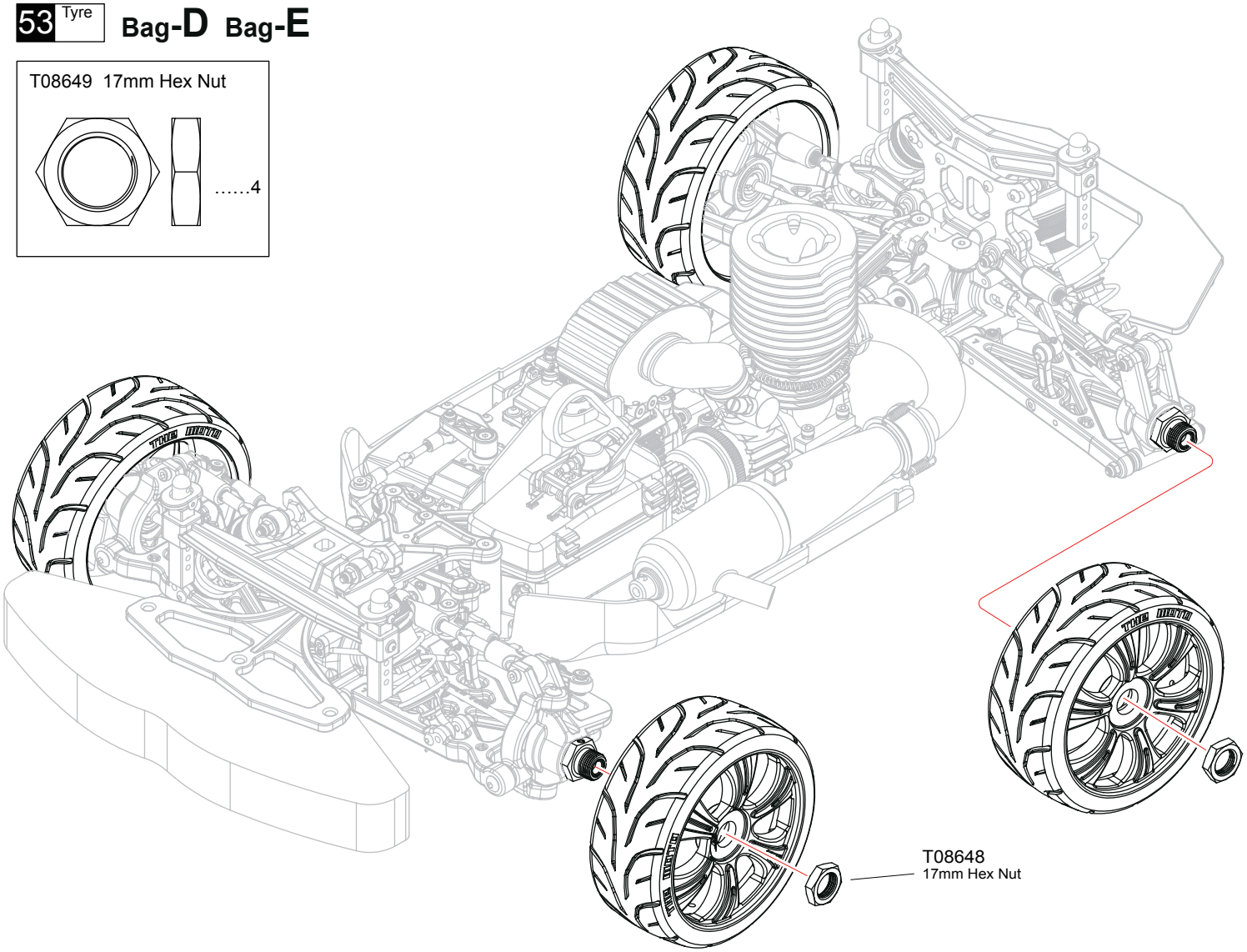

L/R

x2 Assemble as many times as specified

L/R Assemble both Left and Right

54 Body / Wing Bag-K

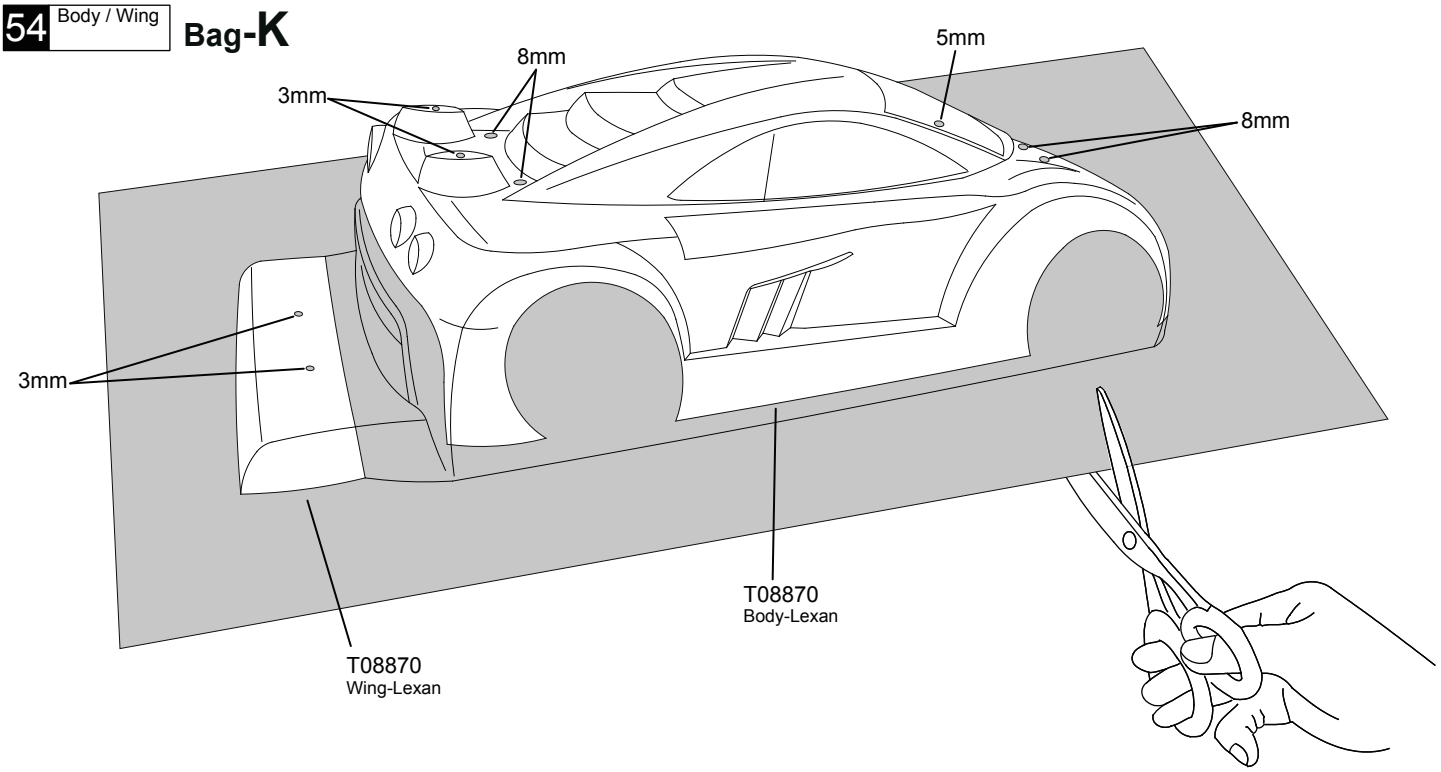

55 Body / Wing Bag-K

Mask sticker the windows from the inside.

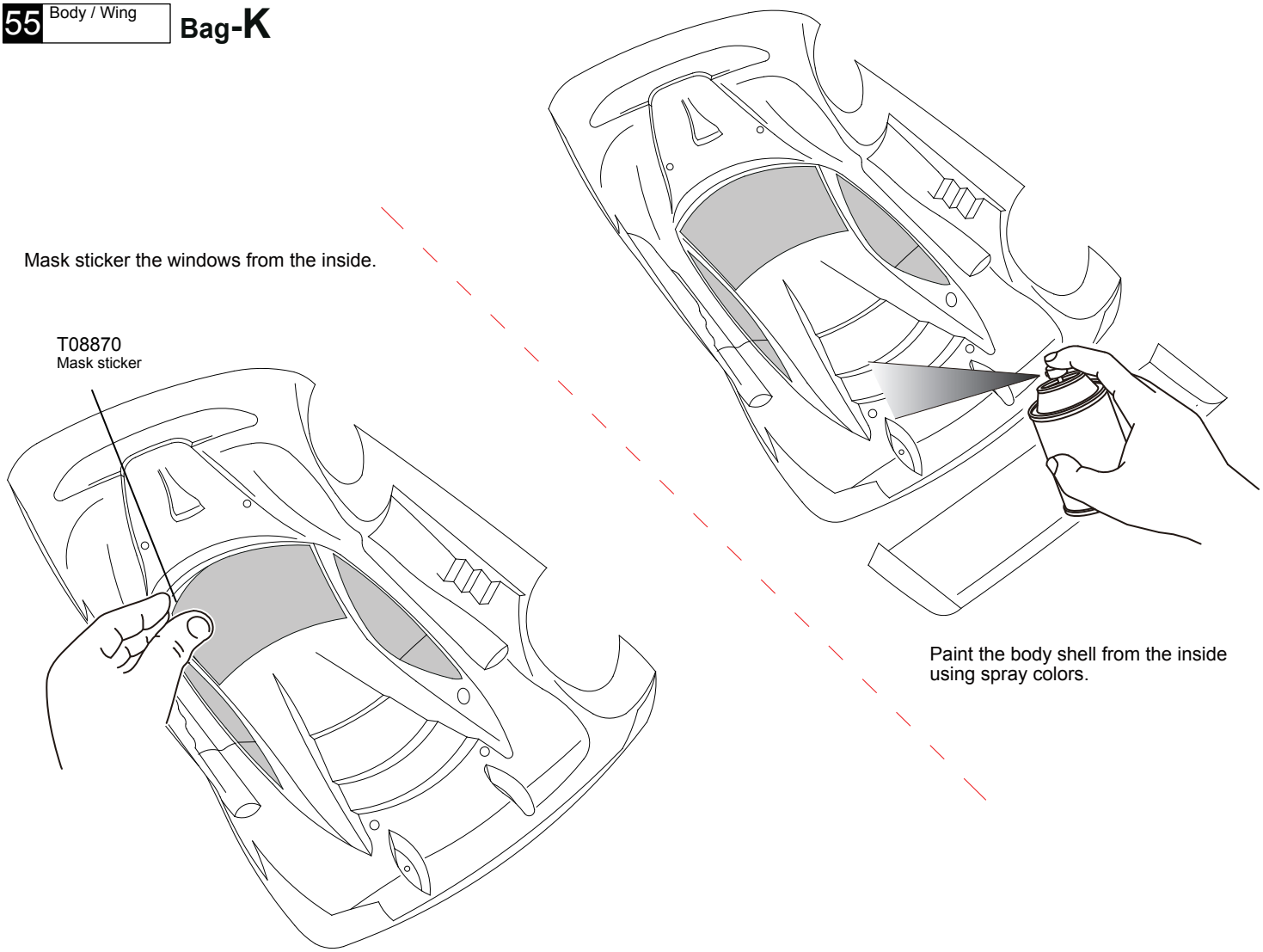

Paint the body shell from the inside using spray colors.

56 Wing Bag-K

T08870 M3x6 Screw 2

T08870 M3 Nylon Nut 2

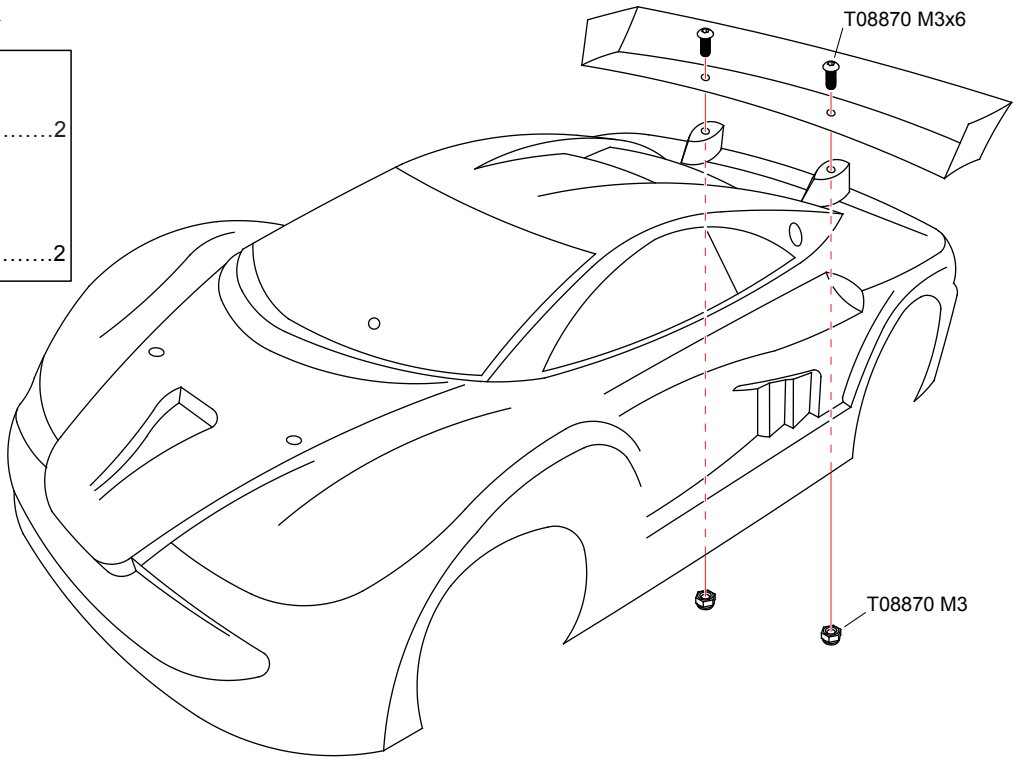

57 Body Bag-L

T08660 Mid Clip 4

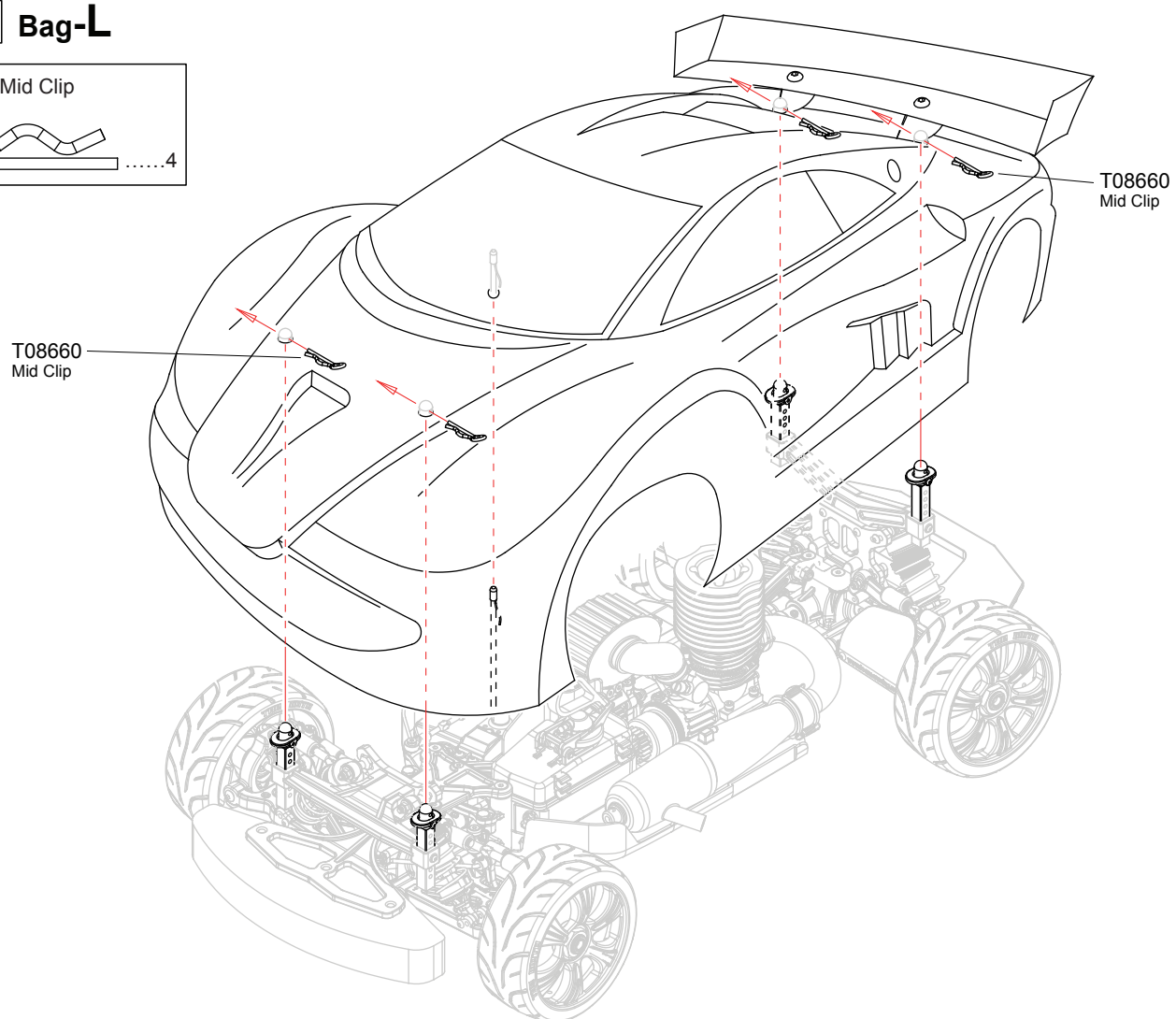

Exploded View

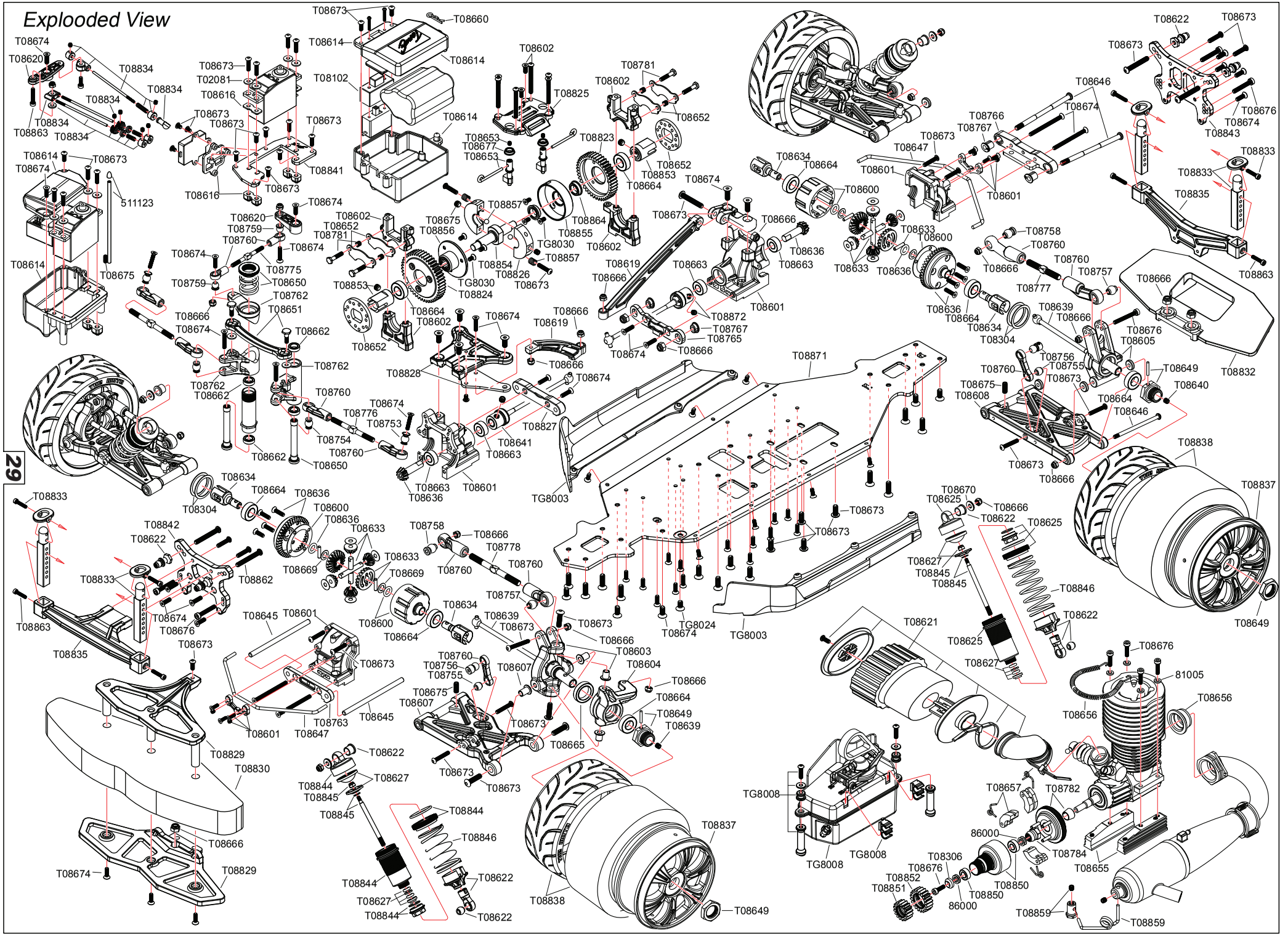

Parts list for GT8 1/8 GP 4WD Touring Car-1

T08870

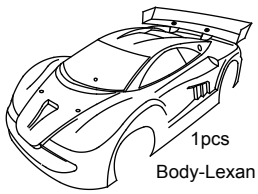

1pcs
Body-Lexan

T08871

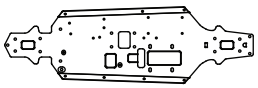

Chassis
1pcs

T08872

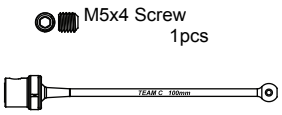

100mm Center Rear CVD
1pcs

T08823

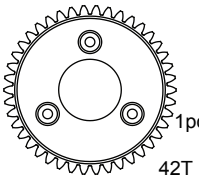

1pcs
42T Gear

T08824

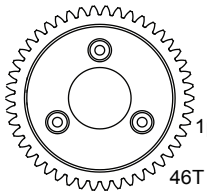

1pcs
46T Gear

T08825

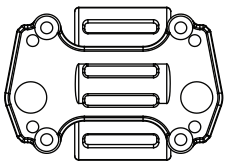

Center Diff Upper Plate
1pcs

T08826

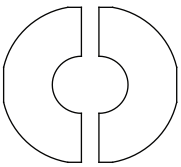

Clutch Shoe
1 set

T08827

1pcs

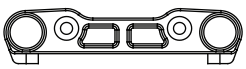

Arm Mount Front-R

T08828

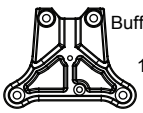

Buffer Plate-Plastic
1pcs

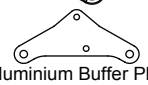

Aluminium Buffer Plate-Black
1pcs

T08829

1pcs

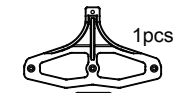

1pcs

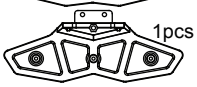

Front Bumper Plate

T08830

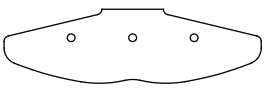

Front Bumper Sponge
1pcs

T08832

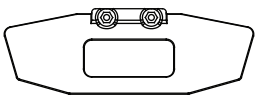

Rear Bumper Plate
1pcs

T08833

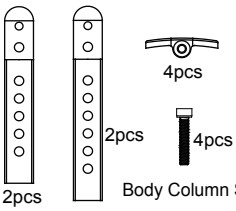

4pcs
2pcs
4pcs
2pcs
Body Column Set

T08834

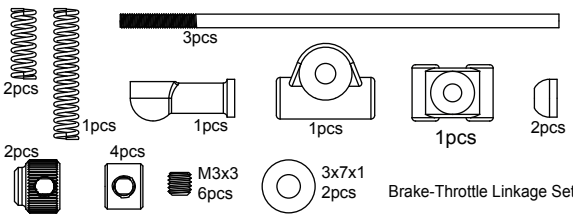

3pcs
2pcs
1pcs
1pcs
1pcs
1pcs
2pcs
2pcs
4pcs
M3x3
6pcs
3x7x1
2pcs
Brake-Throttle Linkage Set

T08835

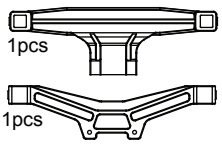

1pcs
1pcs
Body Mount

T08837

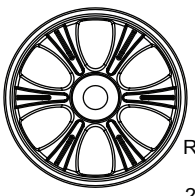

Rim
2pcs

T08838

Tyre
2pcs

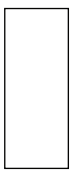

Tyre Sponge
2pcs

T08841

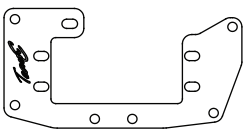

Radio Plate
1pcs

T08842

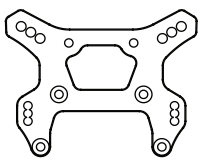

Front Shock Tower
1pcs

T08843

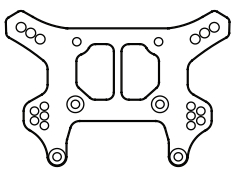

Rear Shock Tower
1pcs

T08844

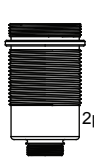

2pcs

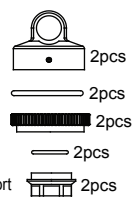

2pcs
2pcs
2pcs
2pcs
2pcs

Front Shock Body-Short

T08845

4pcs 4pcs

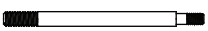

Front Shock Shaft
2pcs

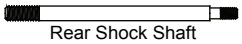

Rear Shock Shaft
2pcs

T08846

Front Shock Spring
2pcs

Rear Shock Spring
2pcs

T08850

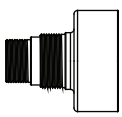

Clutch Cover
1pcs

5x10x4 Ball Bearing
1pcs

5x11x4 Ball Bearing
1pcs

T08847

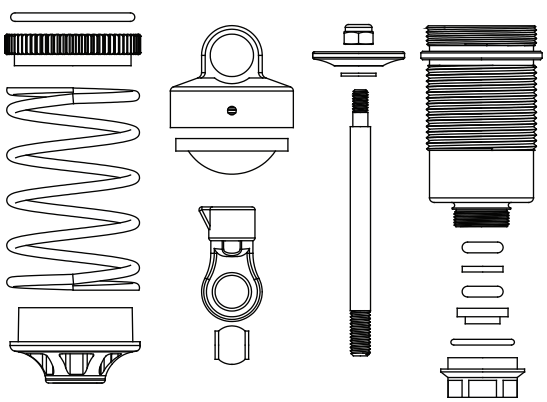

Front Shock Absorber
2Set

T08848

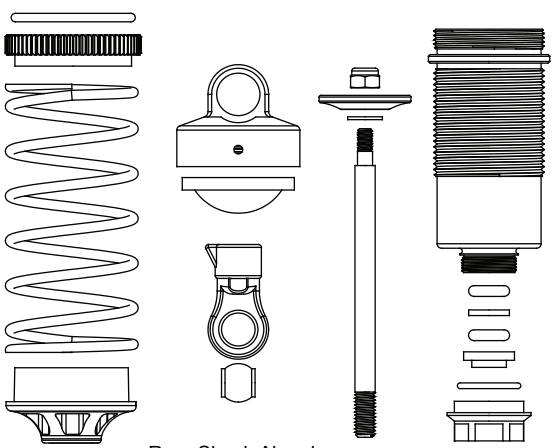

Rear Shock Absorber
2Set

T08851

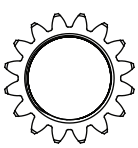

16T Clutch Gear
1pcs

T08852

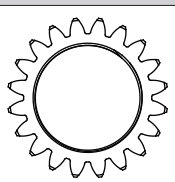

20T Clutch Gear
1pcs

Parts list for GT8 1/8 GP 4WD Touring Car-2

T08853

M5x4 Screw
2pcs

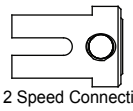
2pcs
2 Speed Connecting Cup

T08854

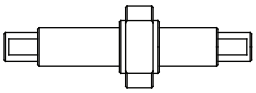
2 Speed Clutch Shaft
1pcs

T08855

8x12x3.5 Ball Bearing
2pcs

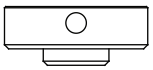
2nd Spur Gear Mount
1pcs

T08856

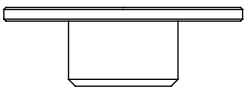
1nd Spur Gear Mount
1pcs

T08857

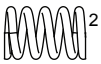
2 Speed Clutch Spring
2pcs

4.0 Ball
2pcs

T08859

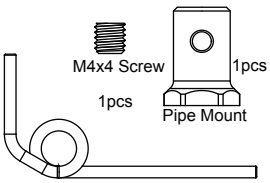
M4x4 Screw
1pcs
1pcs
Pipe Mount
Exhaust Hanger Wire
1pcs

T08862

M3.5x28 Button Head Hex Screw
8pcs

T08863

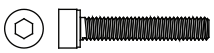
M2.5x15 Cup Head Hex Screw
8pcs

T08864

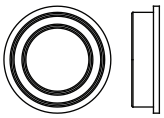
8x12x3.5 Ball Bearing
6pcs

TG8003

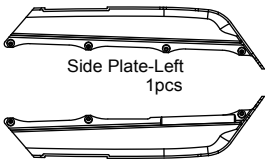
Side Plate-Left
1pcs
Side Plate-Right
1pcs

TG8008

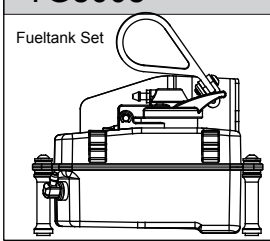
Fueltank Set

TG8024

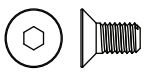
M4x8 Screw
8pcs

TG8030

M3x6 Screw
8pcs

T08600

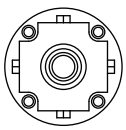
Differential Housing
1pcs

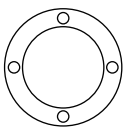
Diferential Pads
1pcs

O-ring
0环 1pcs

T08603

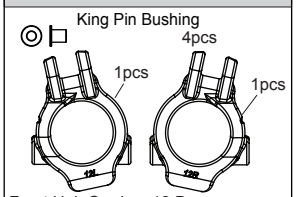
King Pin Bushing
4pcs
1pcs
1pcs
Front Hub Carriers 12 Degree

T08601

Swaybar Mount
1pcs

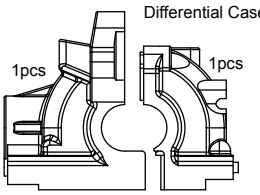
Differential Case
1pcs
1pcs

M3x3 2pcs

M2.5x8 3pcs

T08602

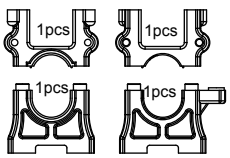
1pcs
1pcs
1pcs
1pcs

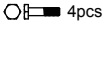
4pcs

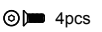
4pcs

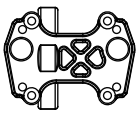
1pcs

4pcs

Center Differential Mount Set

T08604

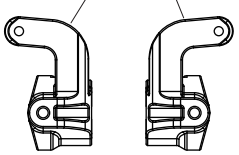
Left 1pcs
Right 1pcs
Steering Block

T08605

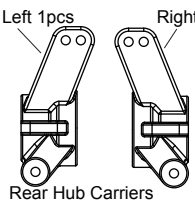
Left 1pcs
Right 1pcs

Washer
4pcs

Rear Hub Carriers

T08607

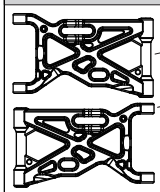
Left 1pcs
Right 1pcs

4pcs
Front Hub
Carrier Bushing

Front Lower Arm

T08608

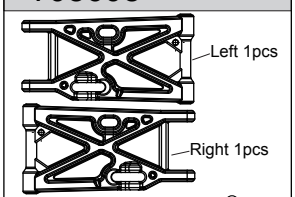
Left 1pcs
Right 1pcs

Rear Lower Arm

2pcs

T08614

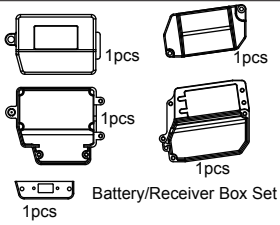
1pcs
1pcs
1pcs
1pcs
1pcs

Battery/Receiver Box Set

T08616

1mm
2pcs
1. 5mm
2pcs
2mm
2pcs
3pcs
Servo Mount

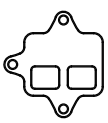
Transponder Mount
1pcs

T08619

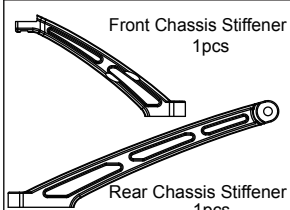
Front Chassis Stiffener
1pcs
Rear Chassis Stiffener
1pcs

T08620

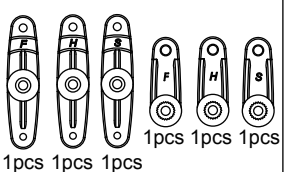
1pcs 1pcs 1pcs
1pcs 1pcs 1pcs
Servo Arm

T08621

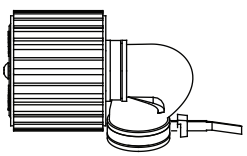
Air Filter Set

T08622

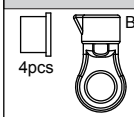
4pcs
Ball End
4pcs

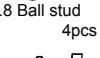
6.8 Ball stud
4pcs

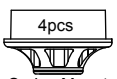
4pcs
Spring Mount

Ball stud
4pcs

T08625

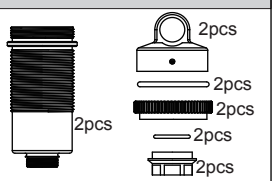
2pcs
2pcs
2pcs
2pcs
2pcs
2pcs
Rear Shock Body-Long

T08627

Diaphragm
4pcs

1mm Plastic Washer
4pcs

2.75mm Plastic Washer
4pcs

3.3x1.9 O-ring
8pcs

Shock Piston
4pcs

T08633

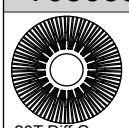
20T Diff Gear
2pcs

10T Diff Gear
4pcs

Diff Shaft
2pcs

2pcs
2.5x11.5 Pin

4pcs
4.1x12x0.2 Washer

2pcs
6.1x11x0.2 Washer

T08634

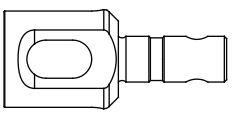
Front/Rear Diff Connecting Cup
2pcs

T08636

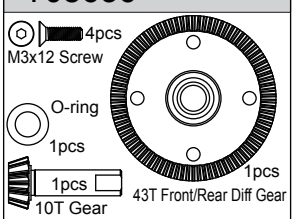
4pcs
M3x12 Screw
O-ring
1pcs
1pcs
10T Gear
1pcs
43T Front/Rear Diff Gear

Parts list for GT8 1/8 GP 4WD Touring Car-3

T08639

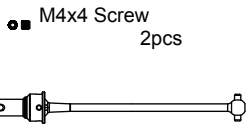

T08640

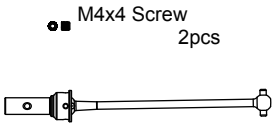

T08641

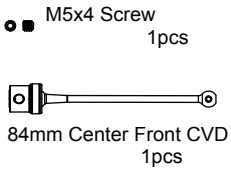

T08645

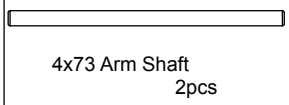

T08646

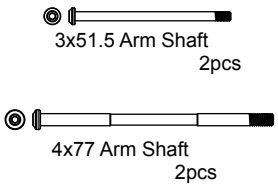

T08647

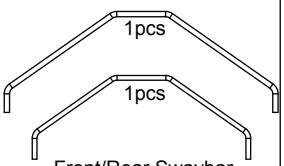

T08649

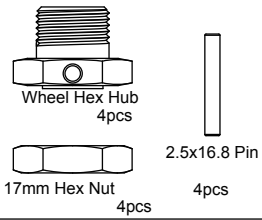

T08650

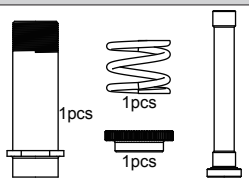

T08651

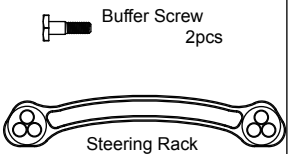

T08652

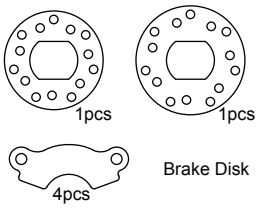

T08653

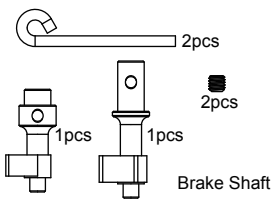

T08655

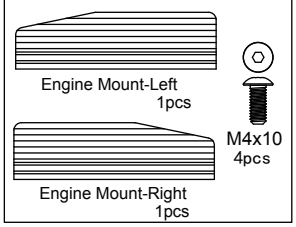

T08656

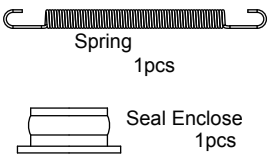

T08657

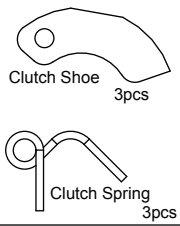

T08660

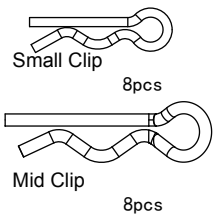

T08661

5x11x4 Ball Bearing

6pcs

T08662

6x10x3 Ball Bearing

6pcs

T08663

6x13x5 Ball Bearing

6pcs

T08664

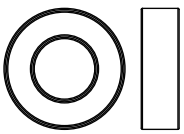

8x16x5 Ball Bearing

6pcs

T08665

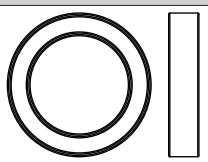

13x19x4 Ball Bearing

6pcs

T08666

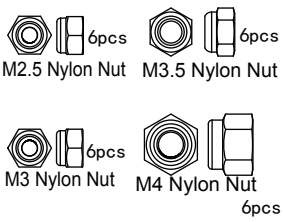

T08667

2.7x5.8x0.5 Washer

6pcs

T08668

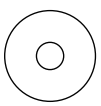

4.1x12x0.2 Washer

6pcs

T08669

6.1x11x0.2 Washer

12pcs

T08670

3.5x9x1.0 Washer

6pcs

T08671

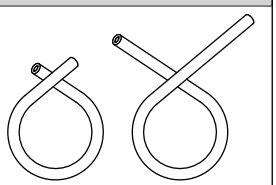

T08676

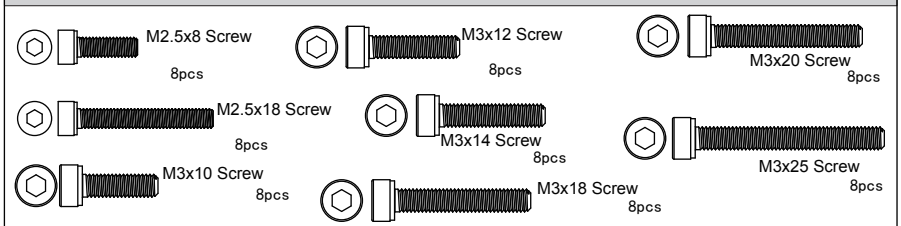

T08677

5x8x2.5 Ball bearing

6pcs

T08673

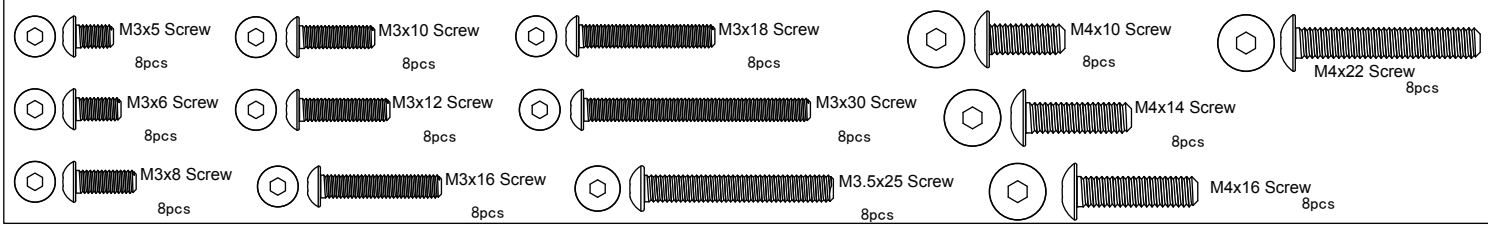

Parts list for GT8 1/8 GP 4WD Touring Car-4

T08674

- M2.5x8 Screw 8pcs
- M3x12 Screw 8pcs
- M3x16 Screw 8pcs
- M4x10 Screw 8pcs
- M3x8 Screw 8pcs
- M3x14 Screw 8pcs
- M3x18 Screw 8pcs
- M4x12 Screw 8pcs
- M3x10 Screw 8pcs
- M3x15 Screw 8pcs
- M3x35 Screw 8pcs
- M4x14 Screw 8pcs

T08675

- M3x3 Screw 8pcs
- M3x5 Screw 8pcs
- M4x4 Screw 8pcs
- M4x10 Screw 8pcs
- M5x4 Screw 8pcs

511123

- Antenna Pipe Cap 5pcs
- Antenna Pipe 5pcs

T08102

- Switch cover

86000

- 5.1x8x0.2 Washer 6pcs

T08304

- 13.1x15.9x0.2 Washer 6pcs

T02081

- 3x7x0.8 Washer 10pcs

81005

- M3 Spring Washer 6pcs

T08750

- Buffer Screw 2pcs
- 3x7x0.8 Washer 2pcs

T08751

- Front Hub Carrier Bushing 4pcs
- M4x16 4pcs

T08752

- King Pin Bushing 4pcs
- M4x14 4pcs

T08753

- 6.8 Ball Stud-Steering 6pcs

T08754

- 6.8 Ball Stud-Steering 6pcs

T08755

- 6.8 Ball Stud-Swaybar/Shock 6pcs

T08756

- M3x3 6pcs
- 6.8 Ball Stud-Swaybar 6pcs

T08757

- 7.8 Ball Stud-Front/Rear Upper 6pcs

T08758

- 7.8 Ball Stud-Front/Rear Upper 6pcs

T08759

- 5.8 Ball Stud-Steering Servo 6pcs

T08760

- 2pcs 6.8 Ball End-Swaybar
- 2pcs 7.8 Ball End-Rear Upper
- 2pcs 6.8 Ball End-Steering
- 1pcs 5.8 Ball End-Steering Servo
- 2pcs 7.8 Ball End-Front Upper

T08762

- 1pcs Rear Chassis Stiffener Mount
- Left 1pcs
- Top 1pcs
- 1pcs Bottom

T08763

- Arm Mount Front-F 1pcs

T08765

- Arm Mount Rear-F 1pcs

T08766

- Arm Mount Rear-R 1pcs

T08767

- +L 1pcs
- +R 1pcs
- 0 2pcs
- -L 1pcs
- -R 1pcs
- 1 2pcs
- Arm Adjust Set

T08768

- Shock Top Ball stud 4pcs

T08769

- Spring Mount 4pcs
- Ball End 4pcs
- Shock Top Mount 4pcs

T08770

- Shock Absorber Top cover 4pcs

T08771

- 18.5x1.5 O-ring 环 4pcs
- 9x1.0 O-ring 环 4pcs

T08772

- CVD Connecting Cup 2pcs

T08773

- 5x8.5 Shaft 2pcs
- 2.5x12.8 Pin 2pcs
- 94mm Drive Shaft 2pcs

Parts list for GT8 1/8 GP 4WD Touring Car-5

T08774

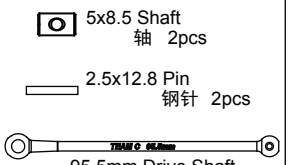

T08775

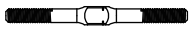

3x40 Turnbuckle

2pcs

T08776

4x53 Turnbuckle

2pcs

T08777

5x40 Turnbuckle

2pcs

T08778

5x58 Turnbuckle

2pcs

T08779

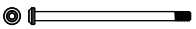

3x51.5 Arm Shaft

2pcs

T08780

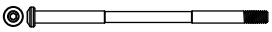

4x77 Arm Shaft

2pcs

T08781

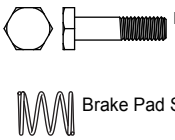

Brake Screw

4pcs

Brake Pad Spring

4pcs

T08782

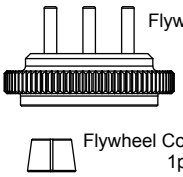

Flywheel

1pcs

Flywheel Collet

1pcs

T08784

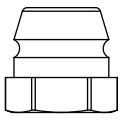

Engine Nut

1pcs

T08786	M2.5 Nylon Nut	6pcs
T08787	M3.5 Nylon Nut	6pcs
T08788	M3x5 Button Head Hex Screw	8pcs
T08790	M3x8 Button Head Hex Screw	8pcs
T08791	M3x10 Button Head Hex Screw	8pcs
T08792	M3x12 Button Head Hex Screw	8pcs
T08793	M3x15 Button Head Hex Screw	8pcs
T08794	M3x16 Button Head Hex Screw	8pcs
T08795	M3x18 Button Head Hex Screw	8pcs
T08796	M3x30 Button Head Hex Screw	8pcs
T08797	M3.5x25 Button Head Hex Screw	8pcs
T08798	M4x10 Button Head Hex Screw	8pcs
T08799	M4x14 Button Head Hex Screw	8pcs
T08800	M4x16 Button Head Hex Screw	8pcs
T08801	M4x22 Button Head Hex Screw	8pcs
T08802	M2.5x8 Flat Head Hex Screw	8pcs
T08803	M3x8 Flat Head Hex Screw	8pcs
T08804	M3x10 Flat Head Hex Screw	8pcs
T08805	M3x12 Flat Head Hex Screw	8pcs
T08806	M3x14 Flat Head Hex Screw	8pcs
T08807	M3x15 Flat Head Hex Screw	8pcs
T08808	M3x16 Flat Head Hex Screw	8pcs

T08809	M3x18 Flat Head Hex Screw	8pcs
T08810	M3x35 Flat Head Hex Screw	8pcs
T08811	M4x10 Flat Head Hex Screw	8pcs
T08812	M4x12 Flat Head Hex Screw	8pcs
T08813	M4x14 Flat Head Hex Screw	8pcs
T08814	M3x5 Set Screw	8pcs
T08815	M4x10 Set Screw	8pcs
T08816	M5x4 Set Screw	8pcs
T08817	M2.5x8 Cap Head Screw	8pcs
T08819	M3x25 Cap Head Screw	8pcs
84002	M4x4 Set Screw	8pcs
83001	M3x12 Cap Head Screw	8pcs
T08218	M3x10 Cap Head Screw	8pcs
T08219	M3x14 Cap Head Screw	8pcs
T08220	M3x18 Cap Head Screw	8pcs
T08306	Engine Screw Washer	6pcs
511129	Mid Clip	10pcs
511190	Small Clip	10pcs
84001	M3x3 Set Screw	8pcs
87004	M3 Nylon Nut	6pcs
87006	M4 Nylon Nut	6pcs

T08785

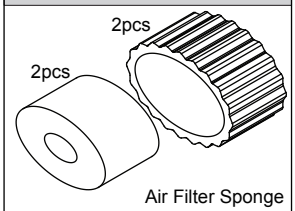

Air Filter Sponge

TU0801 OP

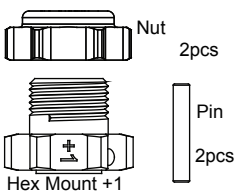

TU0802 OP

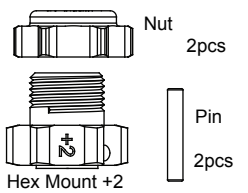

TU0813 OP

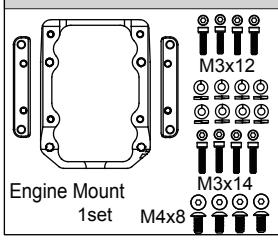

Engine Mount

1set

TU0829 OP

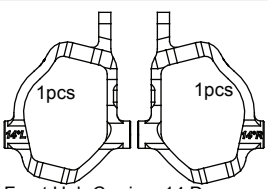

Front Hub Carriers 14 Degree

TU0830 OP

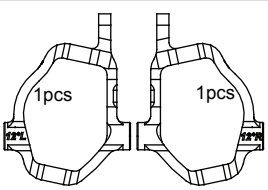

Front Hub Carriers 12 Degree

TU0831 OP

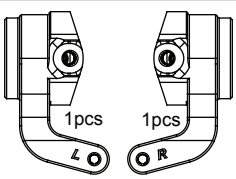

Steering Block

TU0833 OP

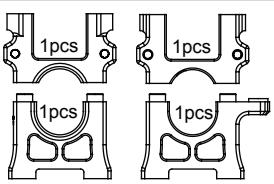

Center Diff Mount

TU0835 OP

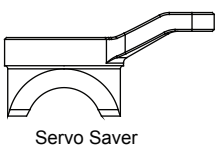

Servo Saver

1pcs

Parts list for GT8 1/8 GP 4WD Touring Car-6

TU0836 OP

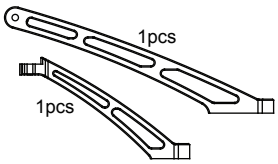

Chassis Stiffener F/R

TU0842 OP

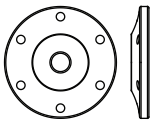

Piston 1.2x6-Black

TU0845 OP

4x52 Titan Turnbuckle
4
2pcs

TU0846 OP

5x40 Titan Turnbuckle
5
2pcs

TU0847 OP

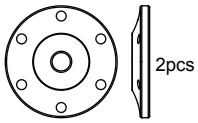

Piston 1.4x6-White
活塞1. 4x6-白色

TU0848 OP

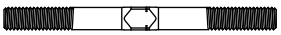

5x58 Titan Turnbuckle

2pcs

TU0860G OP

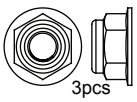

TU0861B OP

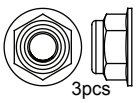

TU0862R OP

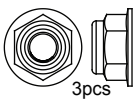

TU0866 OP

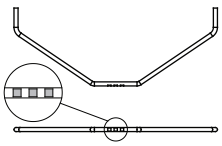

Front Sway Bar 2.3
1pcs

TU0867 OP

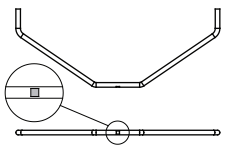

Front Sway Bar 2.6
1pcs

TU0868 OP

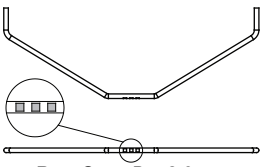

Rear Sway Bar 2.6
1pcs

TU0869 OP

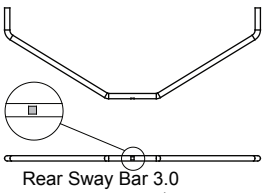

Rear Sway Bar 3.0
1pcs

TU0870 OP

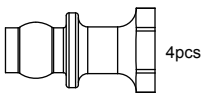

Shock Top Ball stud-Aluminium

TU0871 OP

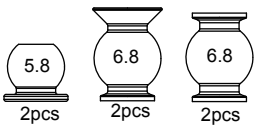

5.8/6.8mm Ball Stud-Aluminium

TU0872 OP

Front Hub Carriers 12 Degree

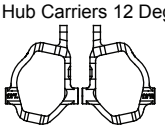

1 set

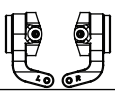

Steering Block

TU0874 OP

Front Hub Carriers 14 Degree

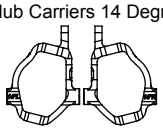

1 set

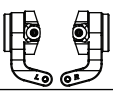

Steering Block

TU0875 OP

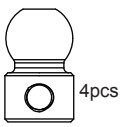

6.8 Swaybar Ball Stud-Aluminium

TU0876 OP

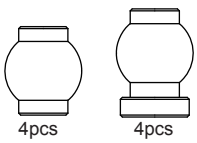

7.8mm Arm Ball Stud-Aluminium

TU0877 OP

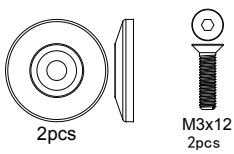

Wing Washer-Aluminium

TU0878 OP

Diff Shaft-Aluminium

6pcs

TU0879 OP

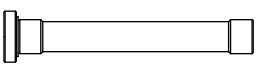

Servo Saver Shaft-Aluminium
2pcs

GT8

SETUP SHEET for the TeamC GT8

Driver _____

Track / City _____

Event _____ *Date* ____ / ____ / ____

Track Condition

☐ Smooth ☐ Bumpy ☐ Low traction ☐ Med traction ☐ High traction

☐ Sandy ☐ Soft dirt ☐ Grass ☐ Hard soil ☐ Clay ☐ Wet ☐ Dry ☐ Dusty ☐ Other

Front Suspension *Shock Mounting&Camber link*

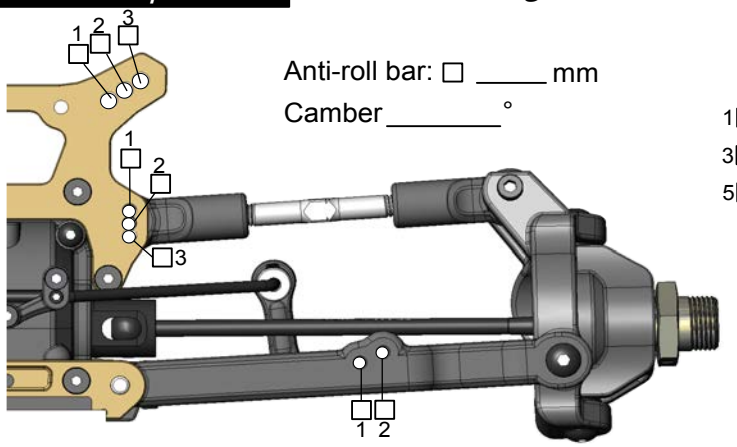

Anti-roll bar: ☐ _____ mm

Camber _____ °

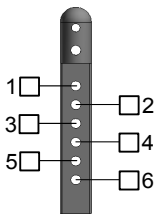

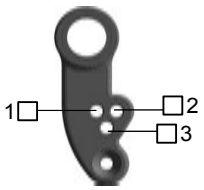

Degree _____ °

Ride height _____ mm

Front Shocks

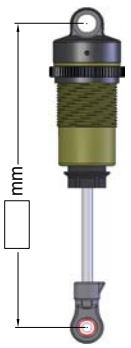

Spring _____

Oil _____ wt

Piston # _____

Rear Suspension *Shock Mounting&Camber link*

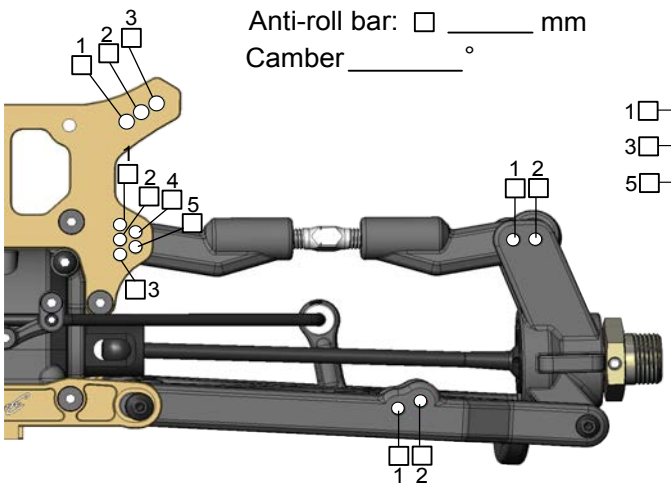

Anti-roll bar: ☐ _____ mm

Camber _____ °

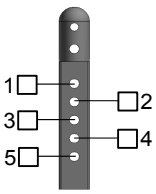

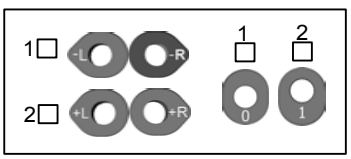

Wheelbase

☐ Long

☐ Medium

☐ Short

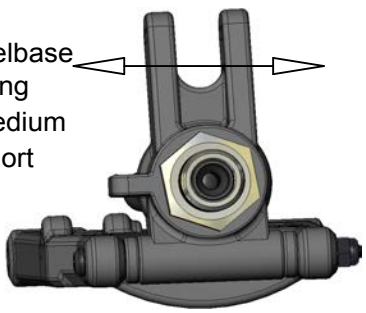

Ride height _____ mm

Rear Shocks

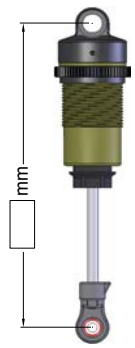

Spring _____

Oil _____ wt

Piston # _____

Tires

Brand _____

Compound _____

Insert _____

Wheel _____

Front

Brand _____

Compound _____

Insert _____

Wheel _____

Rear

Note _____

Diff

Brand _____

Oil wt _____

Front

Brand _____

Oil wt _____

Center

Brand _____

Oil wt _____

Rear

Motor

Engine _____

Glow plug _____

Spur _____

Pinion _____

Fuel _____

Clutch _____

Pipe _____

Note _____

HOBBYPRO COMPANY LTD.

Flat C-D, 5/F.,

Speedy Ind. BLDG.,

114 How Ming Street,

Kwun Tong, KLN., Hong Kong.

Team C Headquarter

www.teamcracing.net

Team C America

www.teamcamerica.com

Team C Europe

www.teamceurope.com