www.teamcracing.net

T8 V3

Instruction manual

1:8 SCALE GP 4WD TOURING CAR

Dimensions 尺寸：

Length 長度 630mm

Width 寬度 320mm

Height 高度 160mm

Transmitter Preparation
調整遙控器

Set up the radio control system as indicated below.
如下圖所示安裝接收機控制系統.

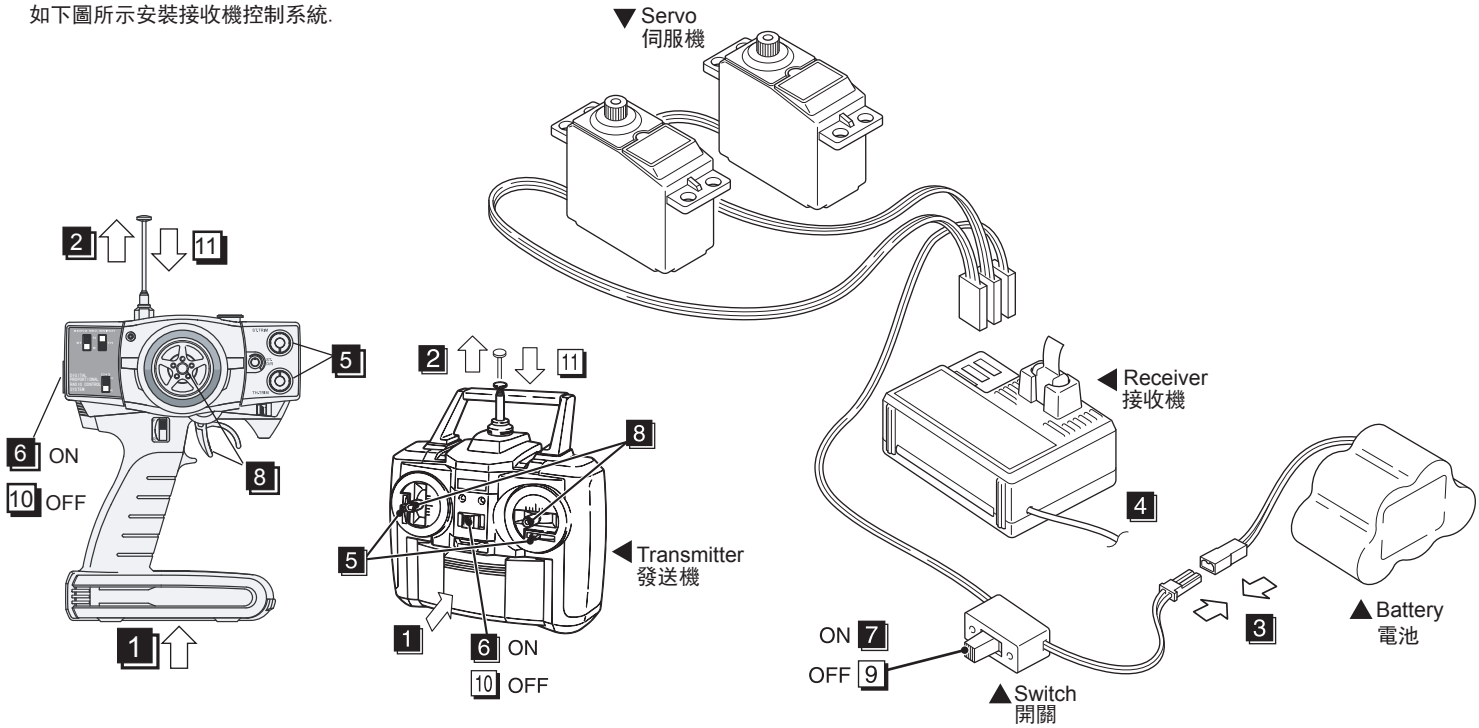

● Start

1. Install batteries.(Transmitter)
2. Extend the antenna.(Transmitter)
3. Connect the battery
4. Extend the antenna.(Reveiver)
5. Center the trims.
6. Switch on.(Transmitter)
7. Switch on.(Reveiver)
8. Make sure the servos are in command.

● Finish

9. Switch off.(Reveiver)
10. Switch off.(Transmitter)
11. Retract the antenna(Transmitter)

● 開始

1. 安裝電池(發送機)
2. 拉出天線(發送機)
3. 連接電池
4. 拉出天線(接收機)
5. 中心對整齊
6. 打開開關(發送機)
7. 打開開關(接收機)
8. 確定控制伺服機

● 結束

9. 關閉開關(接收機)
10. 關閉開關(發送機)
11. 收回天線(發送機)

Tools required
組裝需要的工具

● Needie Nose Pllers
尖嘴鉗

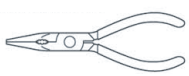

● Awl
錐

● Grease
潤滑油

● Screw Cement
螺絲膠水

● ***H162***
Instant Glue
瞬間膠水

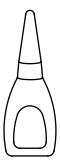

● Differential Grease
差速油

● Molybdenum Grease(Black)
鉬油(黑)

● ***H154***
Body Reamer
車殼絞刀

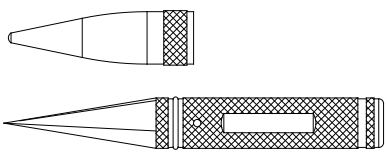

No need to pre-drill precise holes
(1mm to 15mm)can be drilled
可以對預鑽的孔準確地鑽1mm-15mm

● Wire Cutters
鋼絲鉗

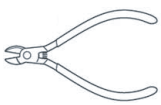

● ***H096***
ROUND CUTTER
剪刀

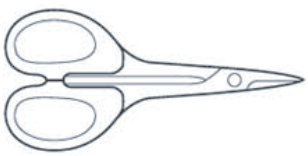

● Hex Wrench
六角板手

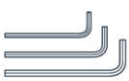

● Hex Wrench
十字套筒

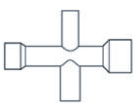

● Sharp Hobby knife
美工刀

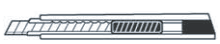

For trimming bodies!
用於修剪車殼!

1 Servo Saver Turnbuckle 伺服拉桿

T08643 3x40 Turnbuckle
3x40 拉桿 1

T08606 5.8 Ball End
5. 8 球頭座 2

T08606 5.8 Ball stud
5. 8球頭 2

T08666 M3 Nylon Nut
M3尼龍螺母 1

T08674 M3x15 Screw
M3x15螺絲 1

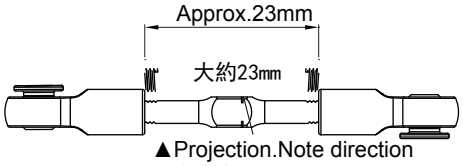

▲Projection.Note direction
注意方向

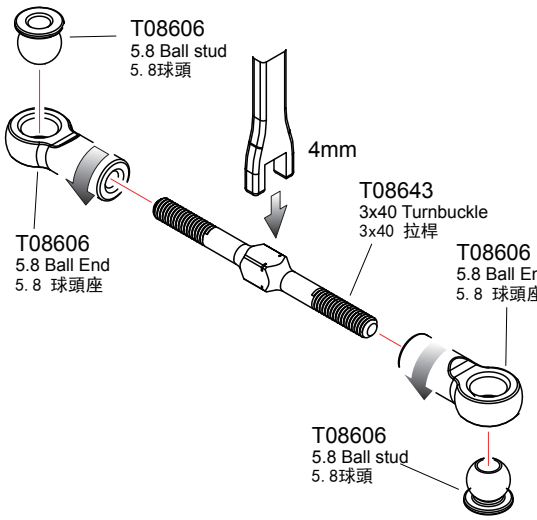

Select the servo horn matching the servo being used.
根據伺服機選擇伺服臂

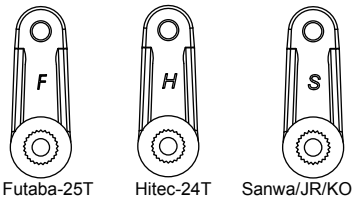

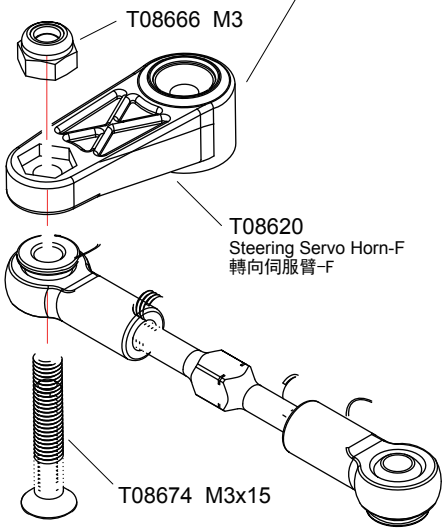

1 Buffer 缓冲 Bag-A

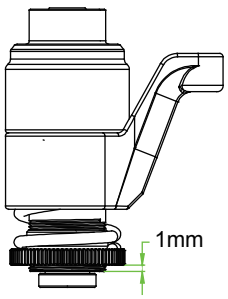

T08651 Buffer Screw
缓冲螺丝 2

W3708 3x7x0.8 Washer
3x7x0. 8垫片 2

T08666 M3 Nylon Nut
M3尼龙螺母 1

T08674 M3x14 Screw
M3x14螺丝 1

T08953

1pcs
Rear Chassis Stiffener Mount
后支撑杆固定座

Top 1pcs
Left 1pcs
Bottom 1pcs

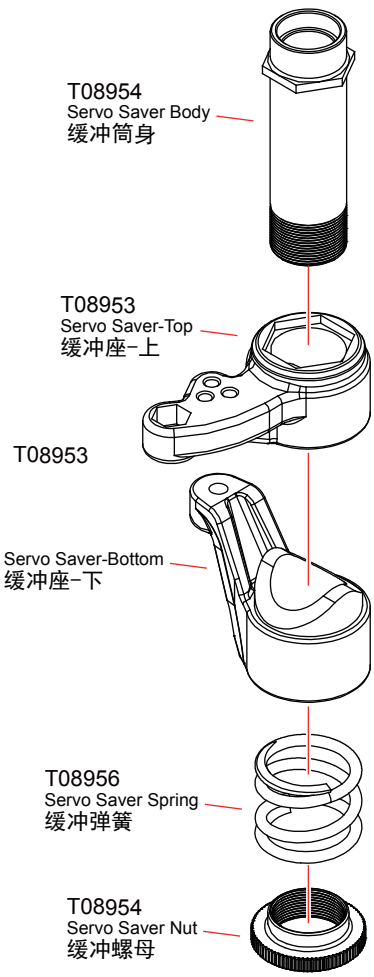

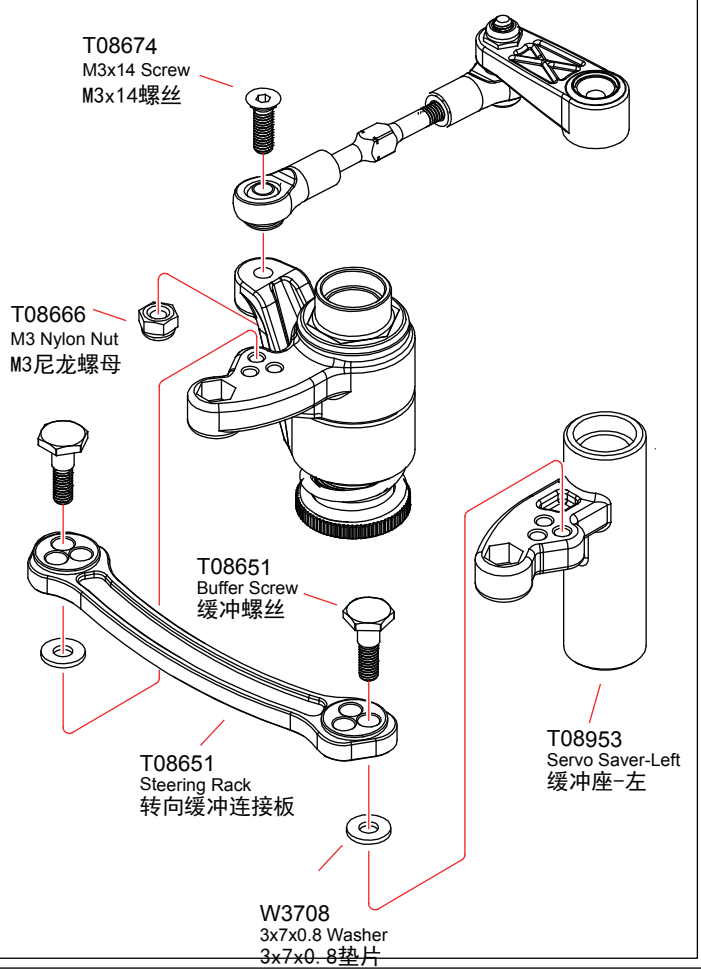

1: Ture-to -scale diagram
圖形比例

3 Servo Saver Post/Side Plate 緩沖柱/側板

Bag-A Bag-B

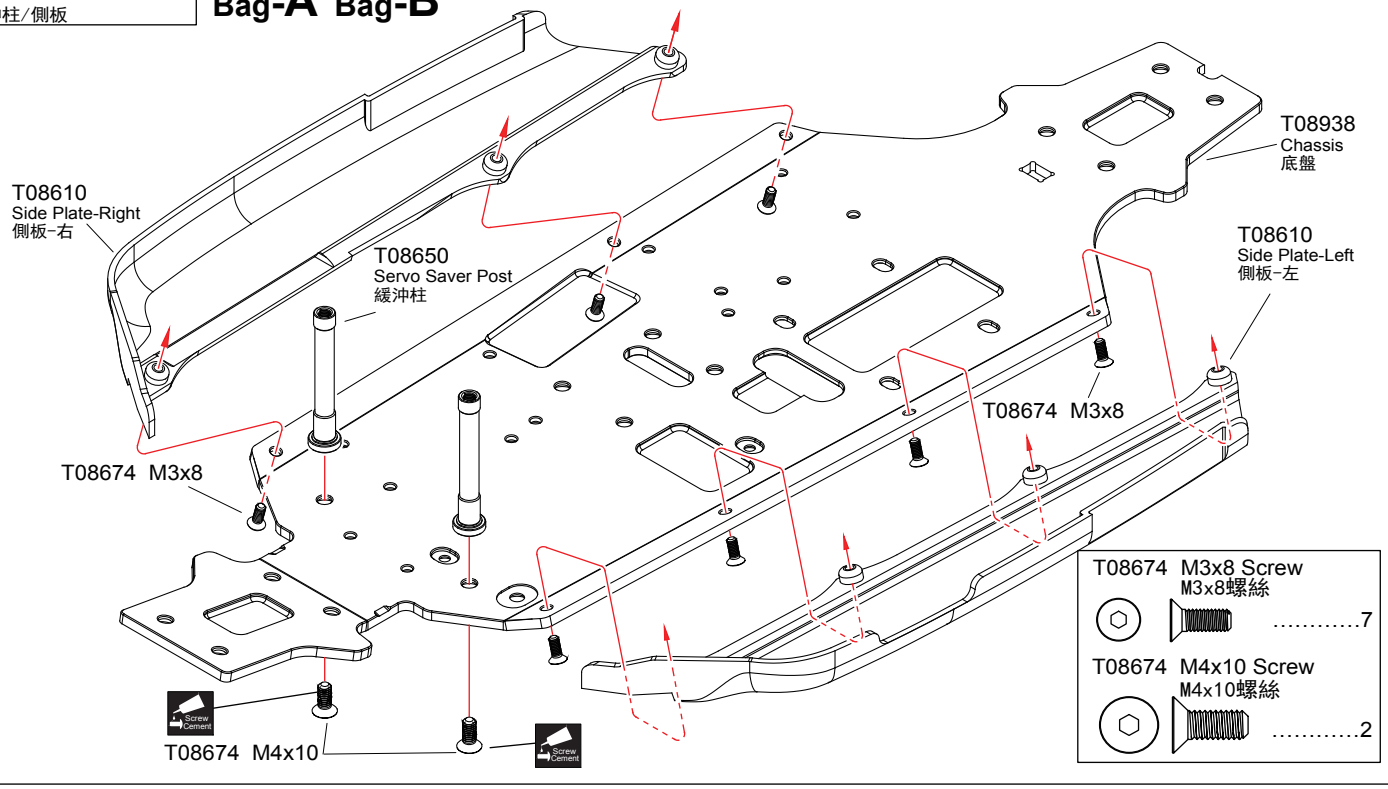

4 Buffer 緩沖

Bag-A

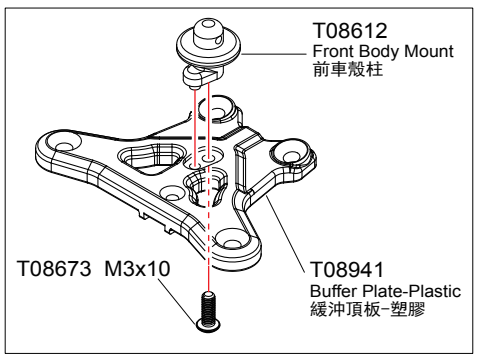

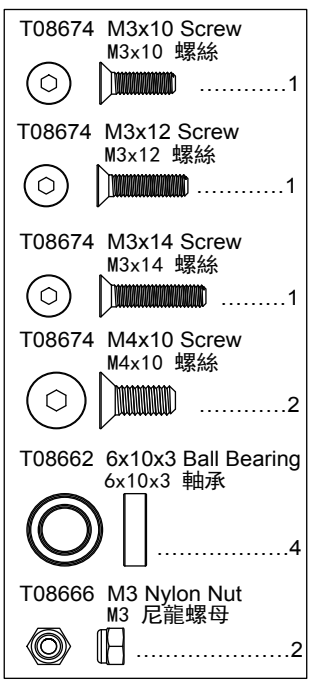

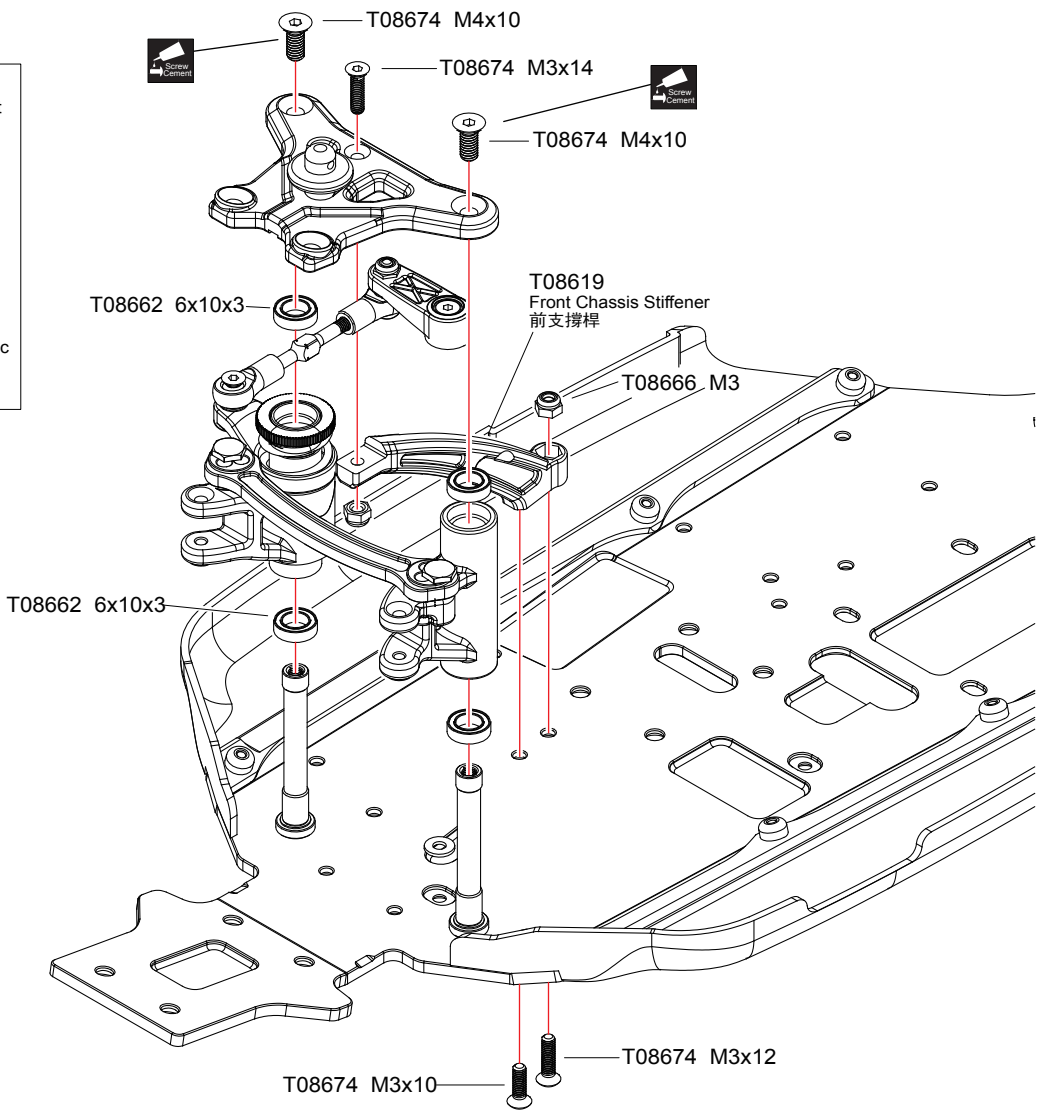

Screw Cement Apply threadlocker(screw cement)
打螺絲膠水

5 Front/Rear Differential 前/後差速器

x2 **Bag-C**

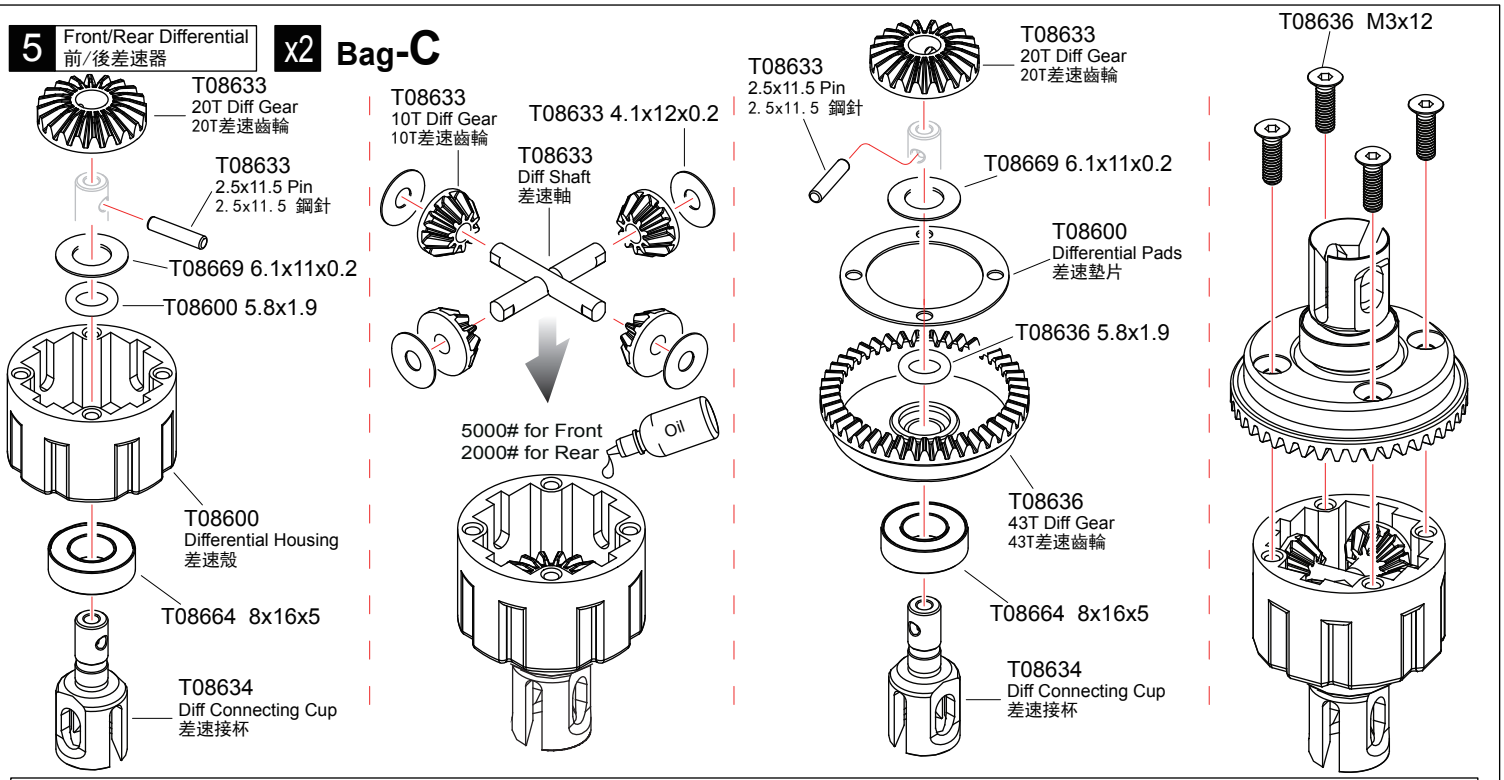

T08600/T08636 5.8x1.9 O-Ring 5. 8x1. 9 0環	T08633 4.1x12x0.2 Washer 4. 1x12x0. 2墊片	T08669 6.1x11x0.2 Washer 6. 1x11x0. 2墊片	T08664 8x16x5 Ball Bearing 8x16x5 軸承	T08636 M3x12 Screw M3x12螺絲
.....4	8	4	4	8

6 Front Differential Case 前差速箱

Bag-C Bag-D

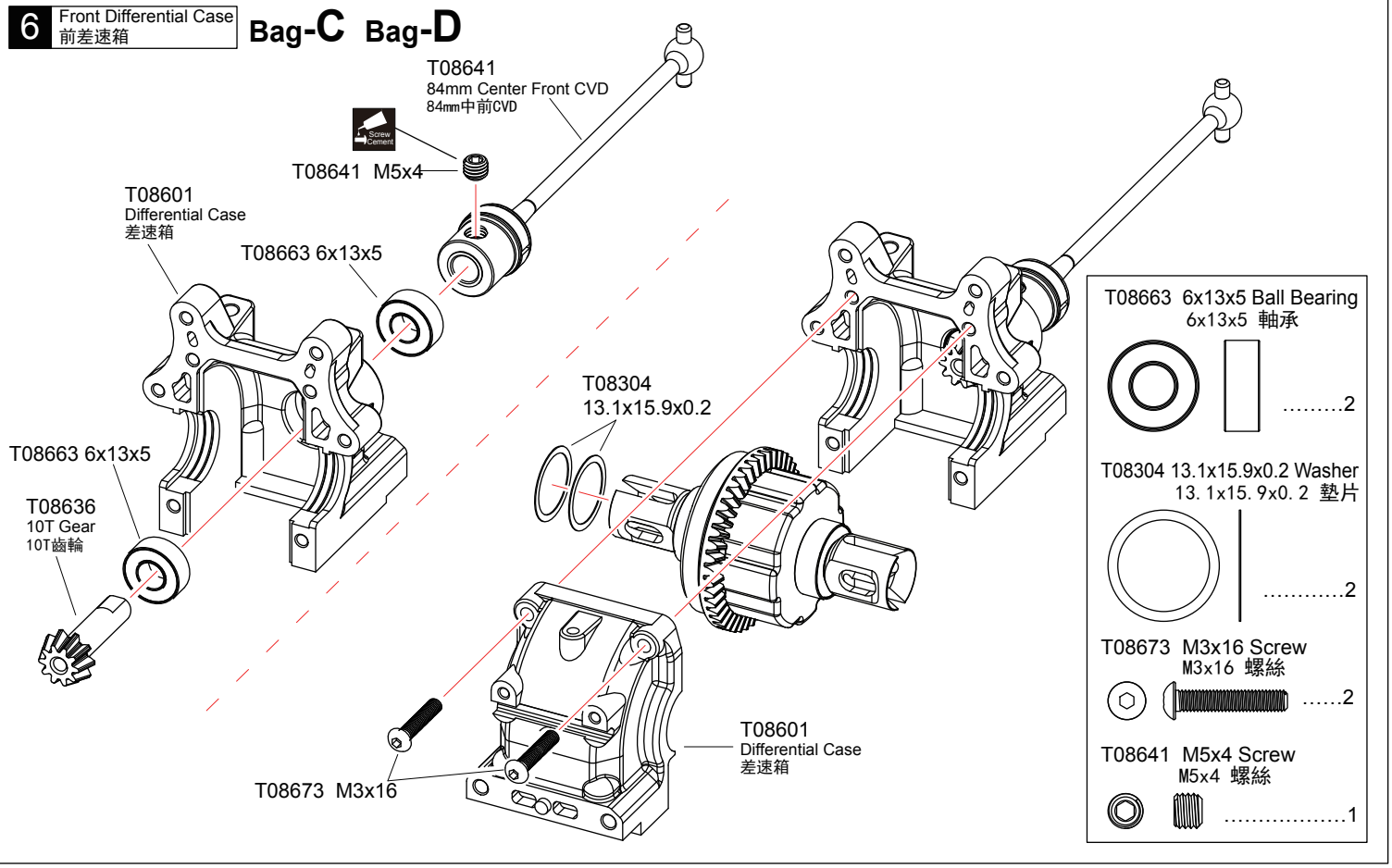

Screw Cement Apply threadlocker(screw cement) 打螺絲膠水

x2 Assemble as many times as specified 需組裝數量

7 Front Swaybar 前防傾桿 Bag-D

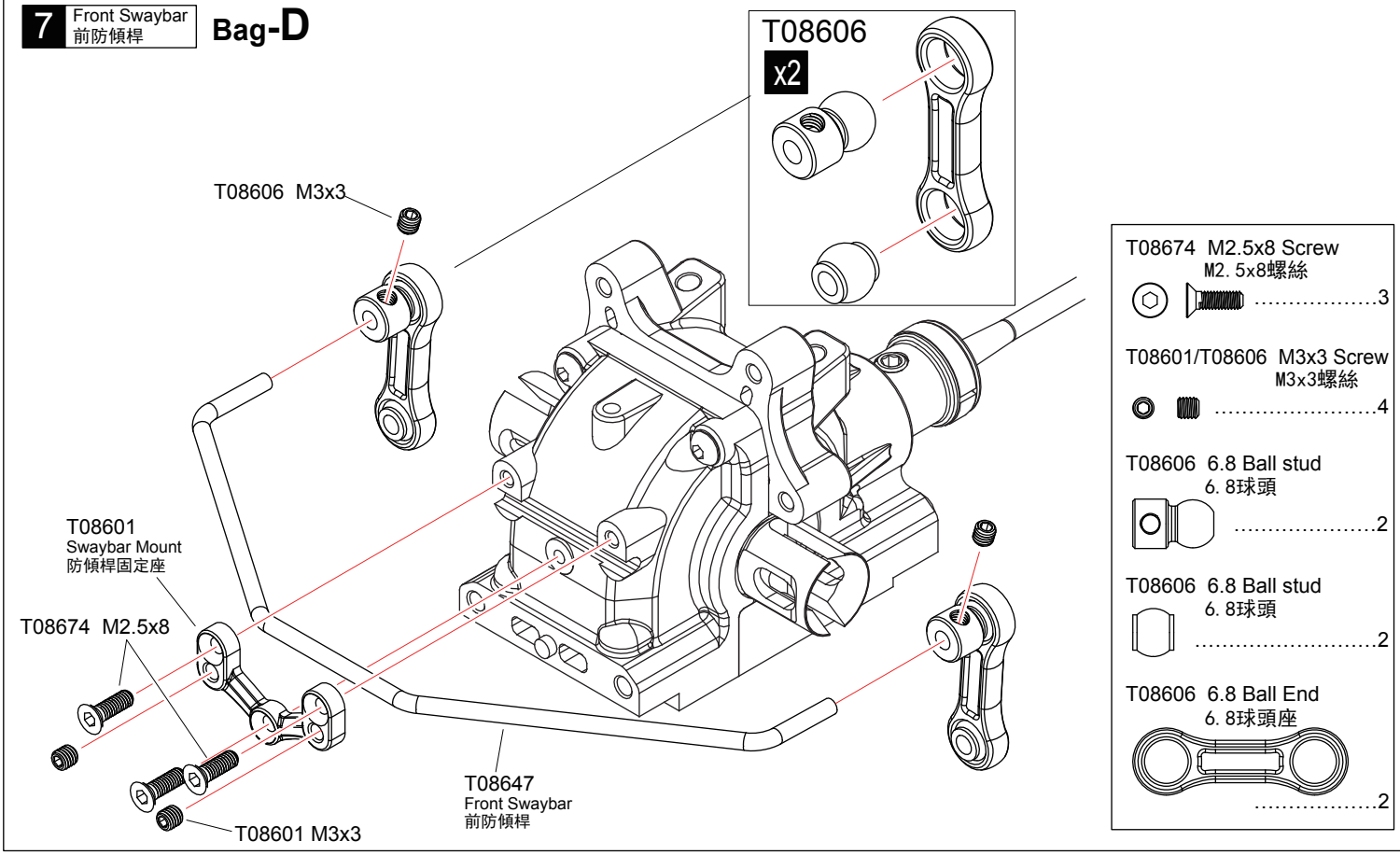

8 Front Hub Carrie 前輪座 Bag-D

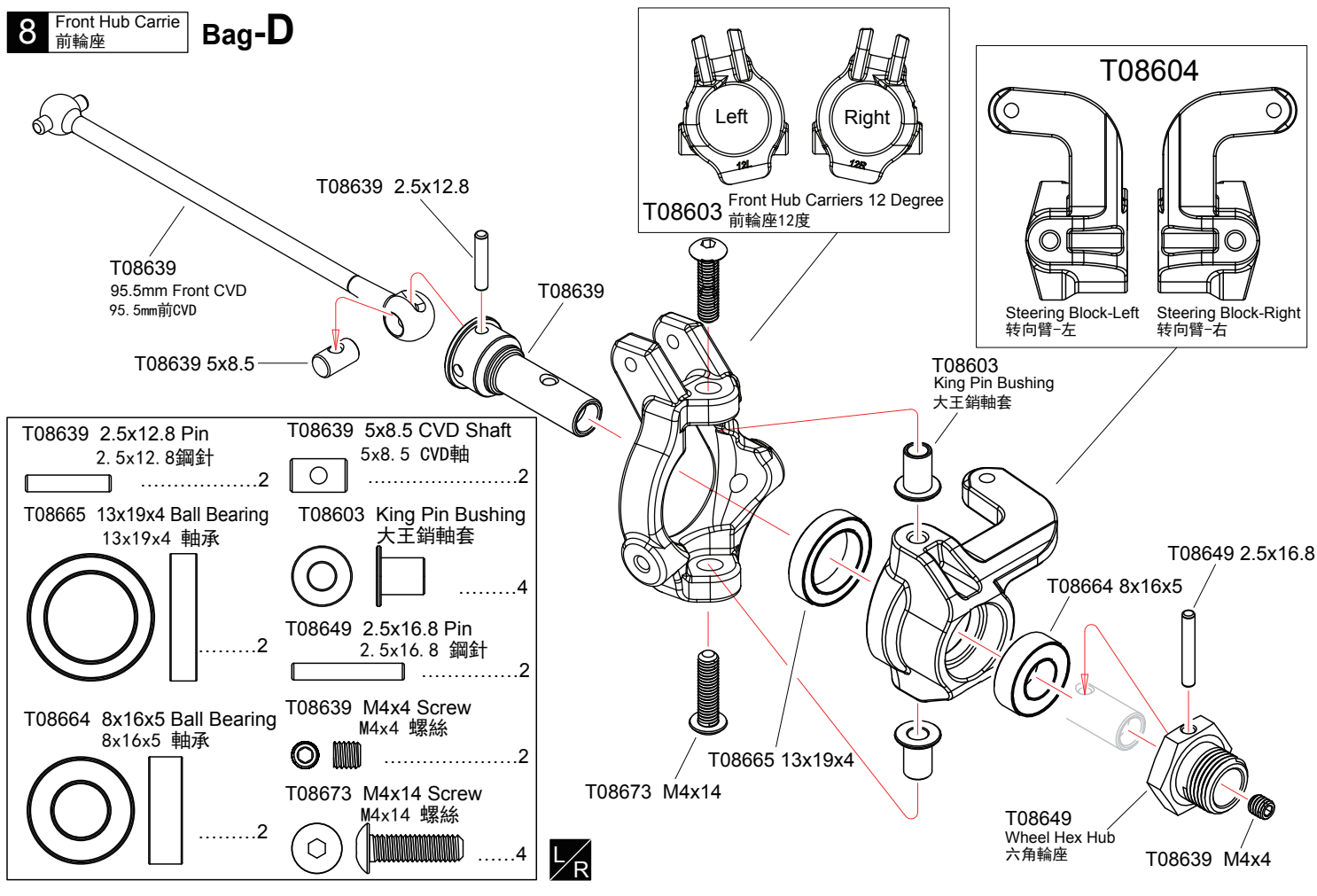

L/R Assemble both Left and Right
組裝左和右

x2 Assemble as many times as specified
需組裝数量

9 Front Hub Carrie 前輪座 Bag-D

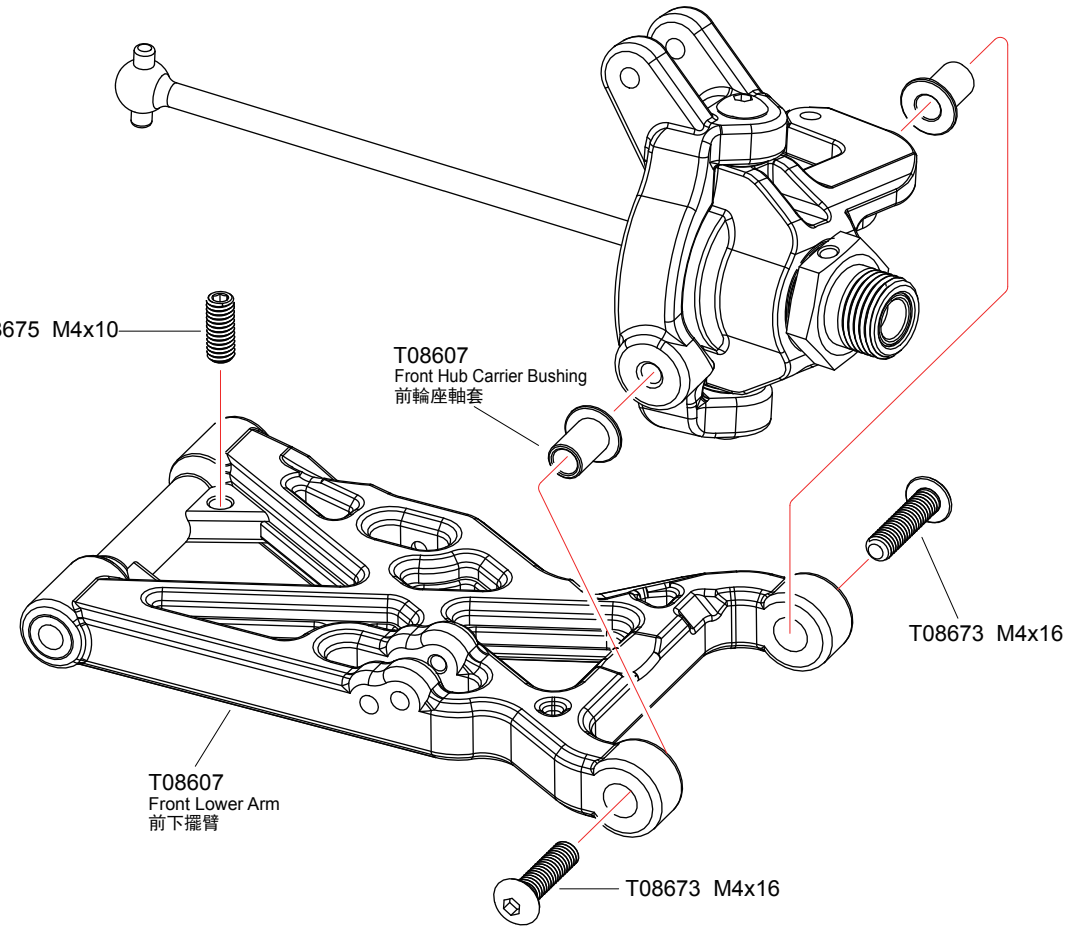

T08675 M4x10 Screw
M4x10 螺絲 2

T08607 Front Hub Carrier Bushing
前輪座軸套 4

T08673 M4x16 Screw
M4x16 螺絲 4

L/R

10 Front Suspension 前懸吊系統 Bag-D

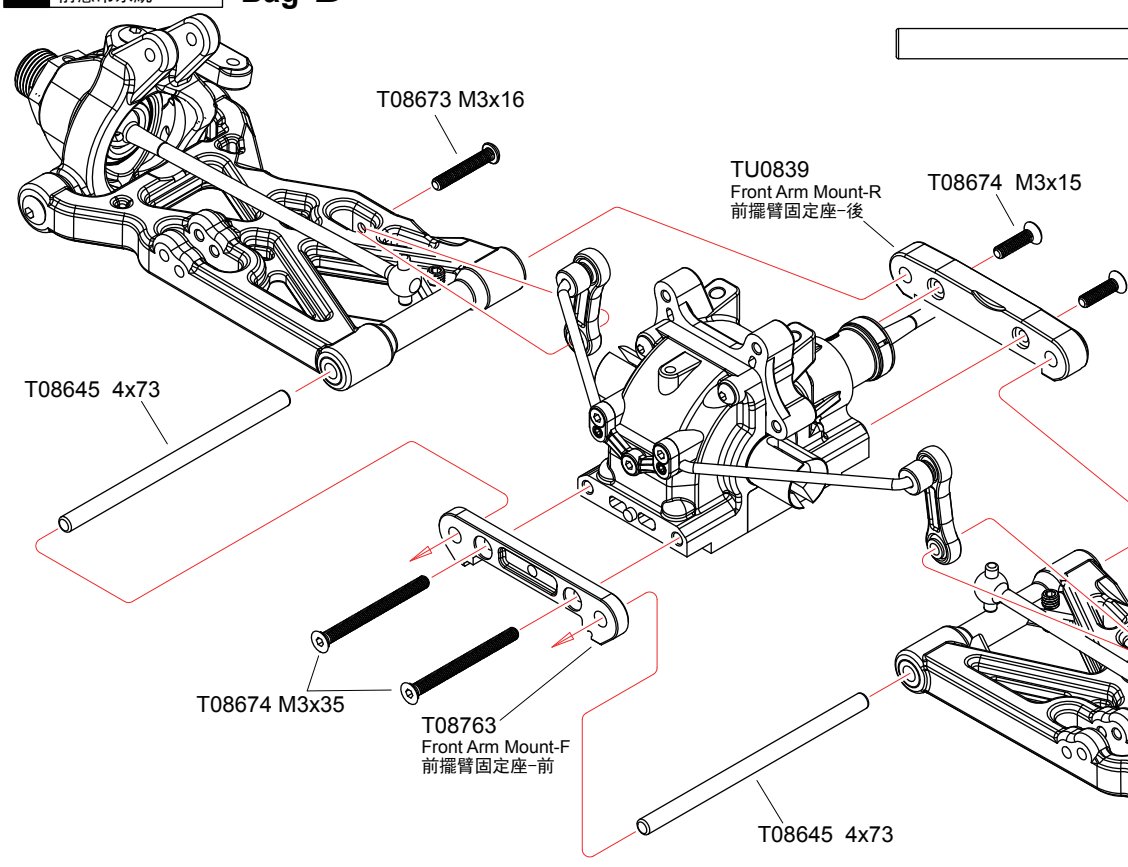

T08645 4x73 Arm Pin
4x73 擺臂軸 2

T08674 M3x35 Screw
M3x35 螺絲 2

T08674 M3x15 Screw
M3x15 螺絲 2

T08673 M3x16 Screw
M3x16 螺絲 2

L/R Assemble both Left and Right
組裝左和右

11 Front Shock Tower 前避震架 Bag-D

T08673
M3.5x25

T08622
Ball stud
球頭

T08674 M3x12

T08631
Front Shock Tower
前避震架

T08674 M3x12 Screw M3x12 螺絲	T08673 M3.5x25 Screw M3. 5x25 螺絲	T08622 Shock cap ball 避震蓋球頭
.....4	...2	2

12 Front Upper Turnbuckle 前上拉桿 Bag-D

T08606
7.8 Ball stud
7. 8 球頭

5mm

T08643
5x58 Turnbuckle
5x58 拉桿

T08606
7.8 Ball End-Front Upper
7. 8 球頭座-前上

T08606
7.8 Ball stud
7. 8 球頭

T08606
7.8 Ball End-Front Upper
7. 8 球頭座-前上

1:1 x1 Front Upper-Left
前上-左

Approx.32mm
大約32mm

▲Projection.Note direction
注意方向

1:1 x1 Front Upper-Right
前上-右

Approx.32mm
大約32mm

▲Projection.Note direction
注意方向

T08643 5x58 Turnbuckle 5x58 拉桿	T08606 7.8 Ball stud 7. 8 球頭	T08606 7.8 Ball stud 7. 8 球頭	T08606 7.8 Ball End-Front Upper 7. 8 球頭座-前上
.....2	2	2	4

1:1 Ture-to -scale diagram 圖形比例

x1 Assemble as many times as specified 需組裝数量

Apply threadlocker(screw cement) 打螺絲膠水

13 Steering Turnbuckle 轉向拉桿

Bag-D

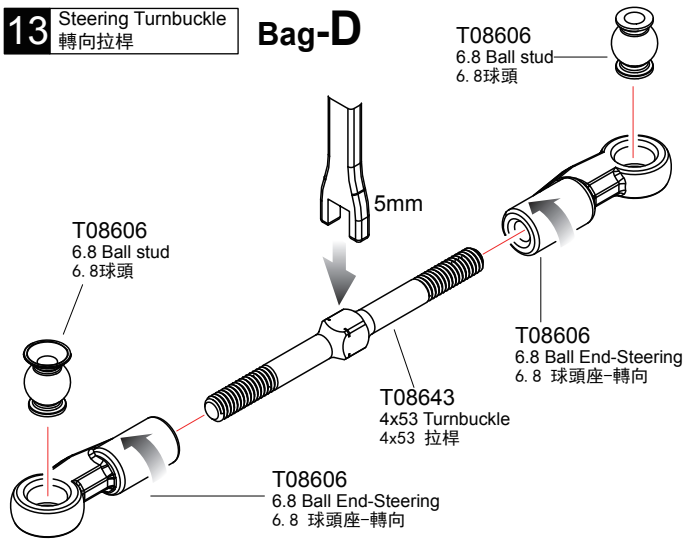

1:1 x1 Steering-Left 轉向-左

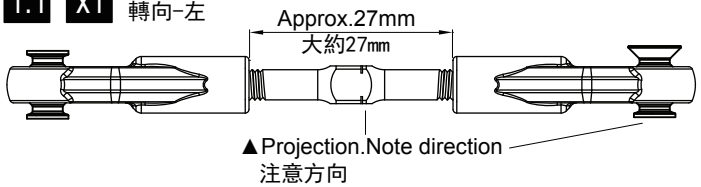

1:1 x1 Steering-Right 轉向-右

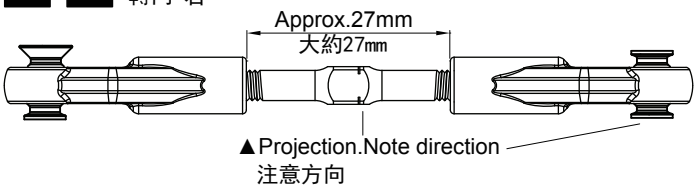

T08643 4x53 Turnbuckle 4x53 拉桿 ……2	T08606 6.8 Ball stud 6. 8球頭 ……2	T08606 6.8 Ball stud 6. 8球頭 ……2	T08606 6.8 Ball End-Steering 6. 8 球頭座-轉向 ……4

14 Front Upper/Steering Turnbuckle 前上/轉向拉桿

Bag-D

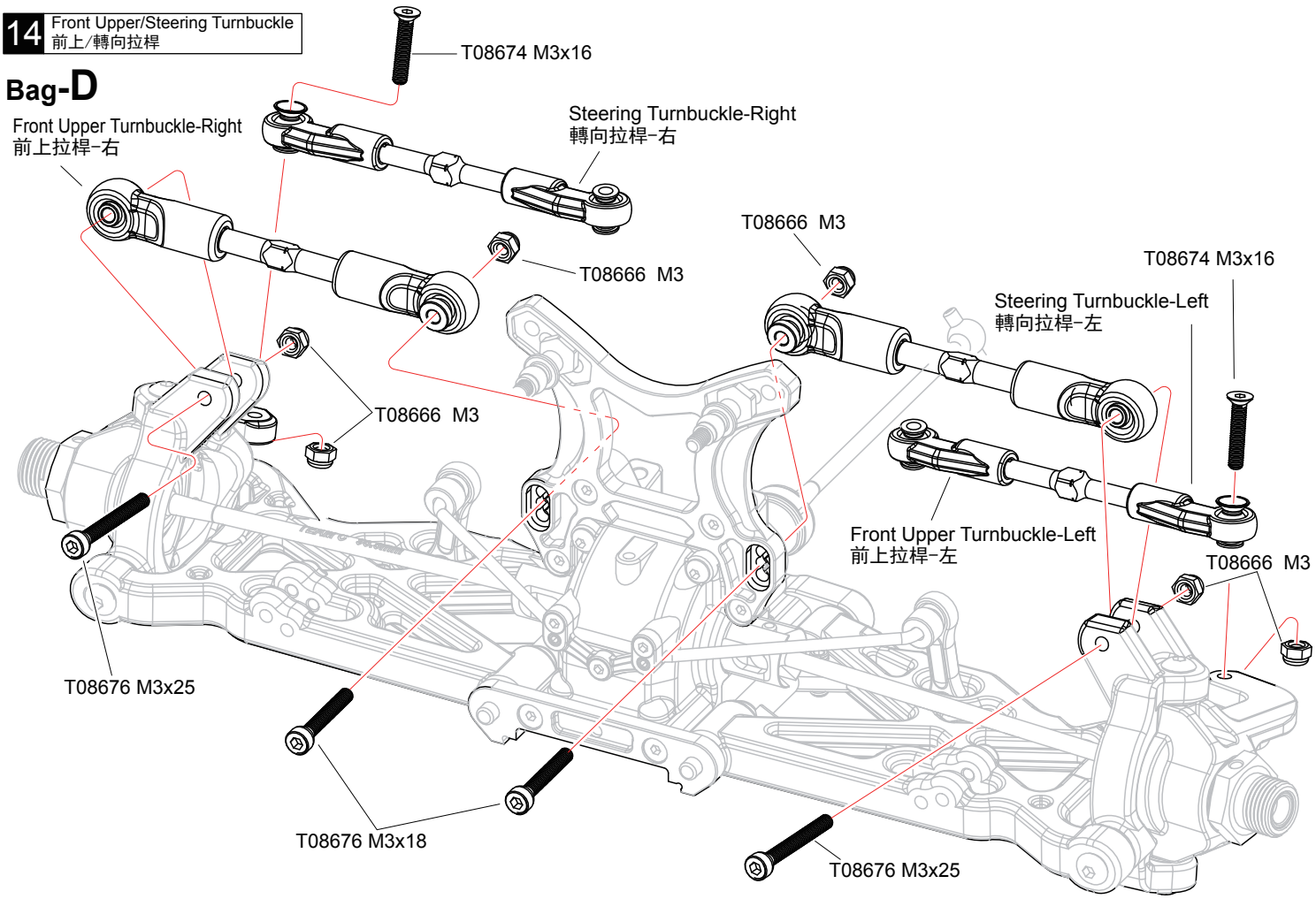

T08674 M3x16 Screw M3x16 螺絲 ……2	T08666 M3 Nylon Nut M3尼龍螺母 ……6	T08676 M3x25 Screw M3x25 螺絲 ……2	T08676 M3x18 Screw M3x18 螺絲 ……2

1:1 Ture-to -scale diagram 圖形比例

x1 Assemble as many times as specified 需組裝数量

15 Front Suspension 前懸吊系統 Bag-D

T08674 M3x18 Screw
M3x18 螺絲 2

T08674 M4x10 Screw
M4x10 螺絲 2

T08674 M4x14 Screw
M4x14 螺絲 4

T08674 M3x18

T08674 M4x10

T08674 M4x14

T08611
Front Bumper
前防撞板

16 Center Differential 中央差速器 Bag-C

T08633
20T Diff Gear
20T差速齒輪

T08633
2.5x11.5 Pin
2. 5x11. 5 鋼針

T08669 6.1x11x0.2

T08600 5.8x1.9

T08600
Differential Housing
差速殼

T08664 8x16x5

T08635
Center Diff Connecting Cup
中差速接杯

T08633
10T Diff Gear
10T差速齒輪

T08633 4.1x12x0.2

T08633
Diff Shaft
差速軸

5000#

T08633
20T Diff Gear
20T差速齒輪

T08633
2.5x11.5 Pin
2. 5x11. 5 鋼針

T08669 6.1x11x0.2

T08600
Differential Pads
差速墊片

T08637 5.8x1.9

T08638
44T Center Diff Gear
44T 中差速齒輪

T08664 8x16x5

T08635
Center Diff Connecting Cup
中差速接杯

T08636 M3x12

T08600/T08636 5.8x1.9 O-Ring
5. 8x1. 9 O環 2

T08633 4.1x12x0.2 Washer
4. 1x12x0. 2墊片 4

T08669 6.1x11x0.2 Washer
6. 1x11x0. 2墊片 2

T08664 8x16x5 Ball Bearing
8x16x5 軸承 2

T08636 M3x12 Screw
M3x12螺絲 4

17 Brake 剎車 Bag-C

T08602 Brake Screw
剎車螺絲
.....4

T08602
Center Differential Mount-Front Top
中央差速器固定座-前上

T08652
Brake Disk Rotor-Small
剎車盤-小

T08602
Center Differential Mount-Rear Top
中央差速器固定座-後上

T08652
Disk Brake Plate
剎車夾片

T08781
Brake Pad Spring
剎車夾片彈簧

T08781
Brake Screw
剎車螺絲

T08602
Center Differential Mount-Rear Bottom
中央差速器固定座-後下

3.5

T08652
Brake Disk Rotor-Big
剎車盤-大

T08602
Center Differential Mount-Front Bottom
中央差速器固定座-前下

18 Brake 剎車 Bag-C

T08677 5x8x2.5 Ball bearing
5x8x2. 5軸承
.....2

T08653 M3x3 Screw
M3x3螺絲
.....2

T08602 M3x8 Screw
M3x8 螺絲
.....4

T08602 M3x30 Screw
M3x30 螺絲
.....4

T08653 M3x3 (Screw Cement)

T08602 M3x30

T08602 M3x8

T08653
Brake Rod
剎車桿

T08602

T08677 5x8x2.5

T08653 M3x3 (Screw Cement)

T08653
Brake Shaft-Rear
剎車軸-後

T08677 5x8x2.5

T08653
Brake Shaft-Front
剎車軸-前

T08653
Brake Rod
剎車桿

Apply threadlocker(screw cement)
打螺絲膠水

19 Brake/Throttle 剎車/油門 Bag-C

T08618 M3x3 Screw
M3x3螺絲 6

T08666 M2.5 Nylon Nut
M2. 5尼龍螺母 1

T08666 3.1x7x1 Plastic Washer
3. 1x7x1 塑膠墊片 2

T08676 M2.5x8 Screw
M2. 5x8 螺絲 1

T08676 M2.5x18 Screw
M2. 5x18 螺絲 1

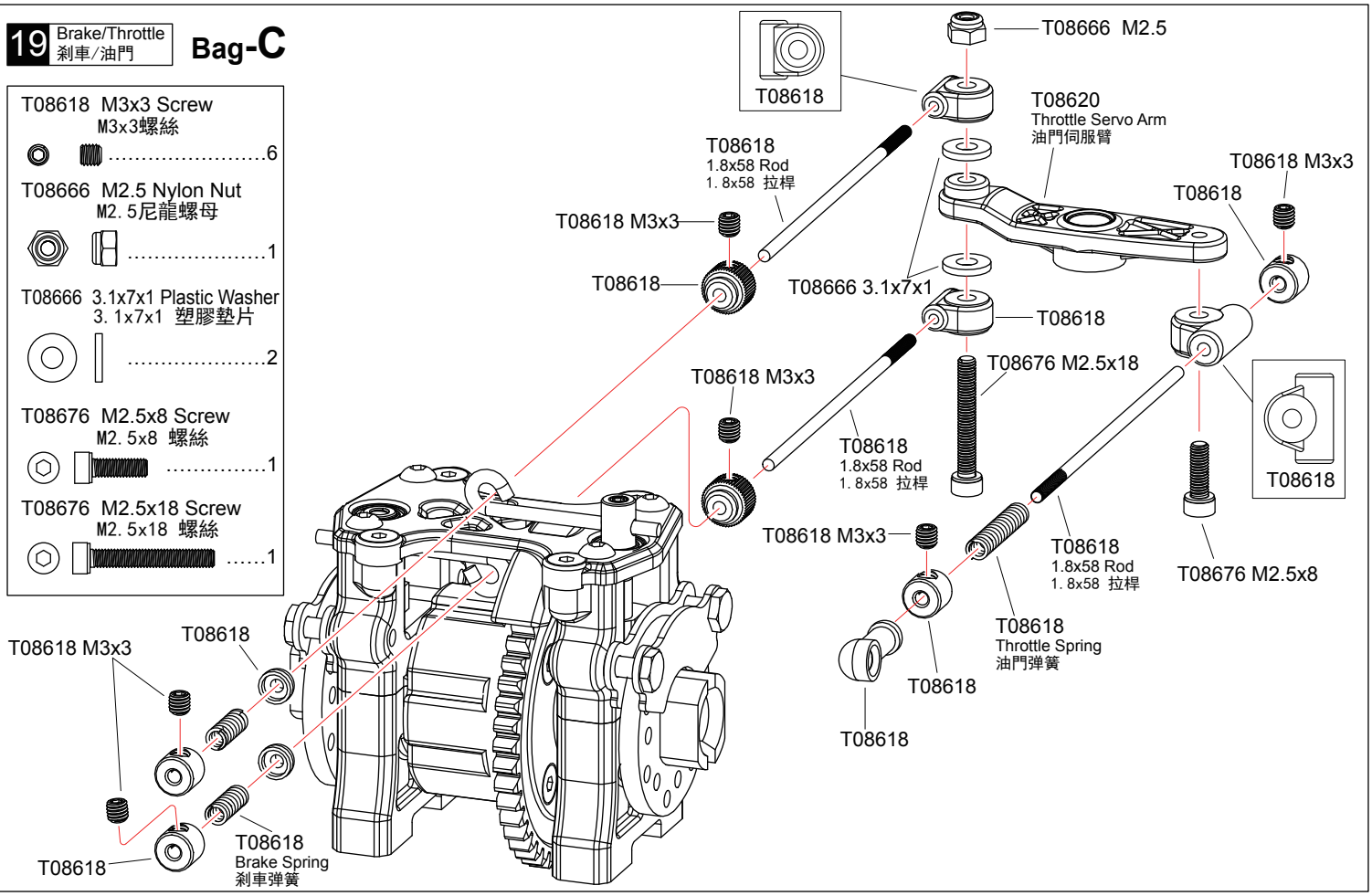

20 Center Differential 中央差速器 Bag-C

T08674 M4x12 Screw
M4x12螺絲 4

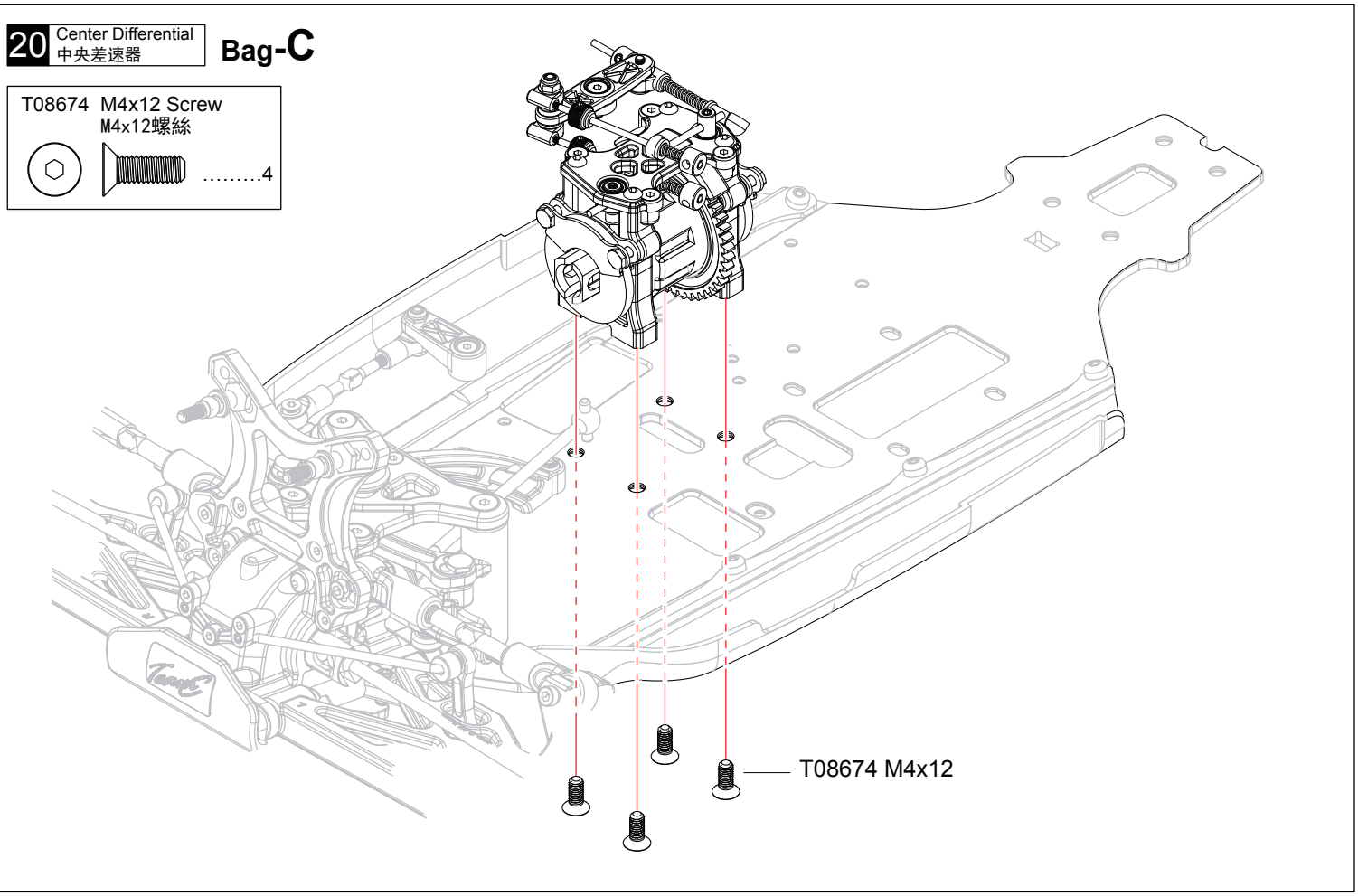

21 Rear Differential Case 後差速箱

Bag-C Bag-E

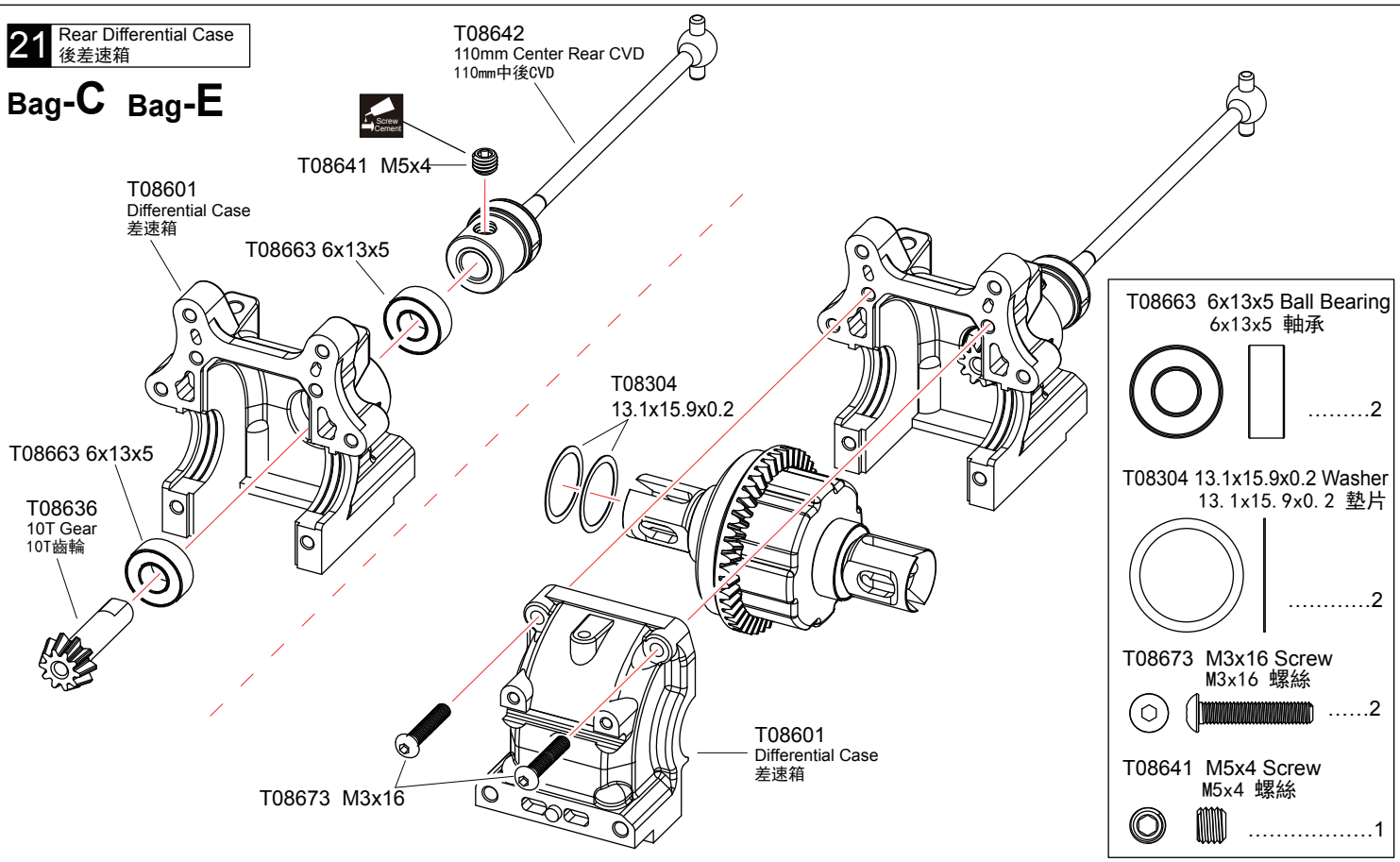

22 Rear Swaybar 後防傾桿

Bag-E

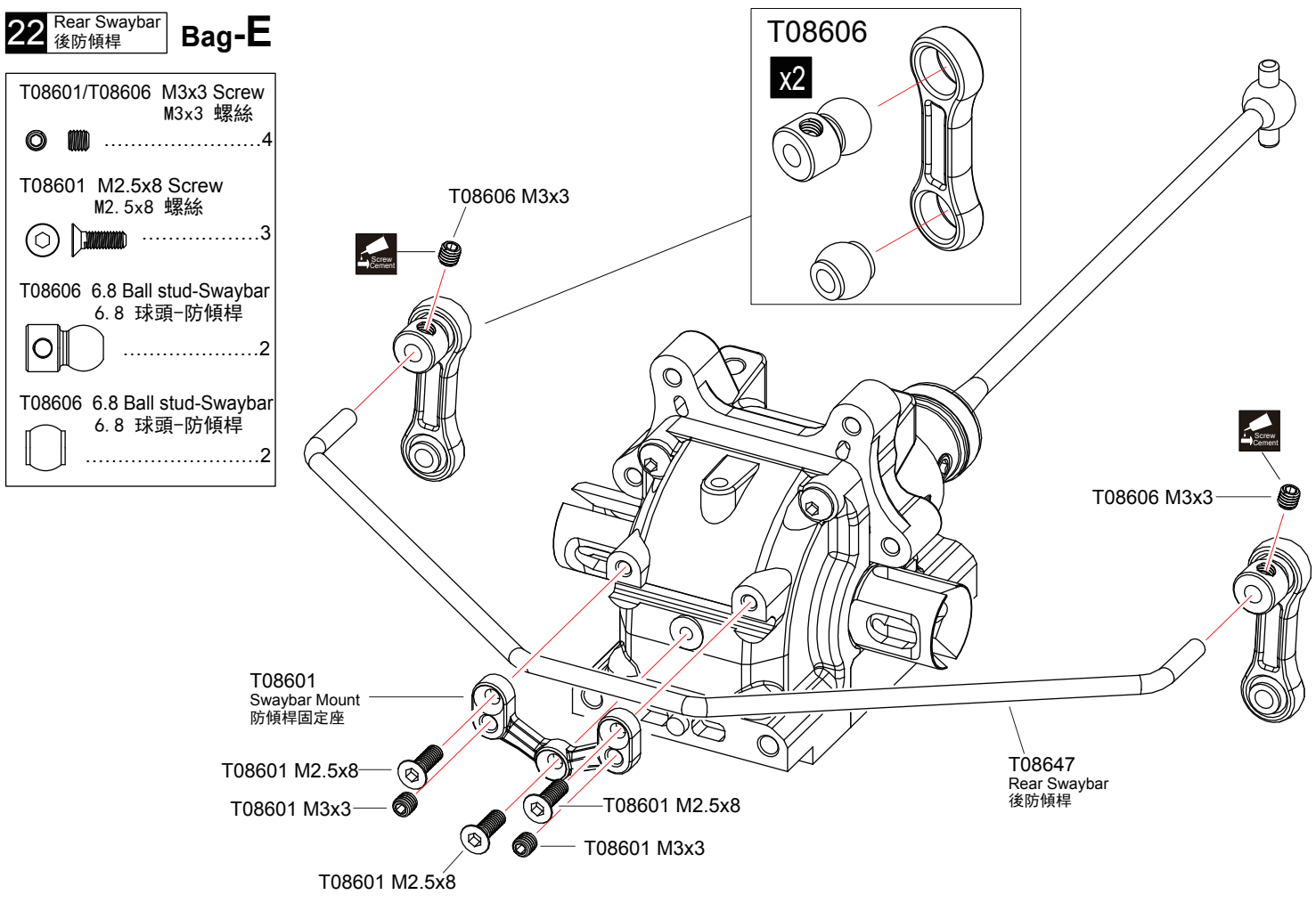

Screw Cement Apply threadlocker(screw cement) 打螺絲膠水

x2 Assemble as many times as specified 需組裝数量

23 Rear Hub Carrie 後輪座 Bag-E

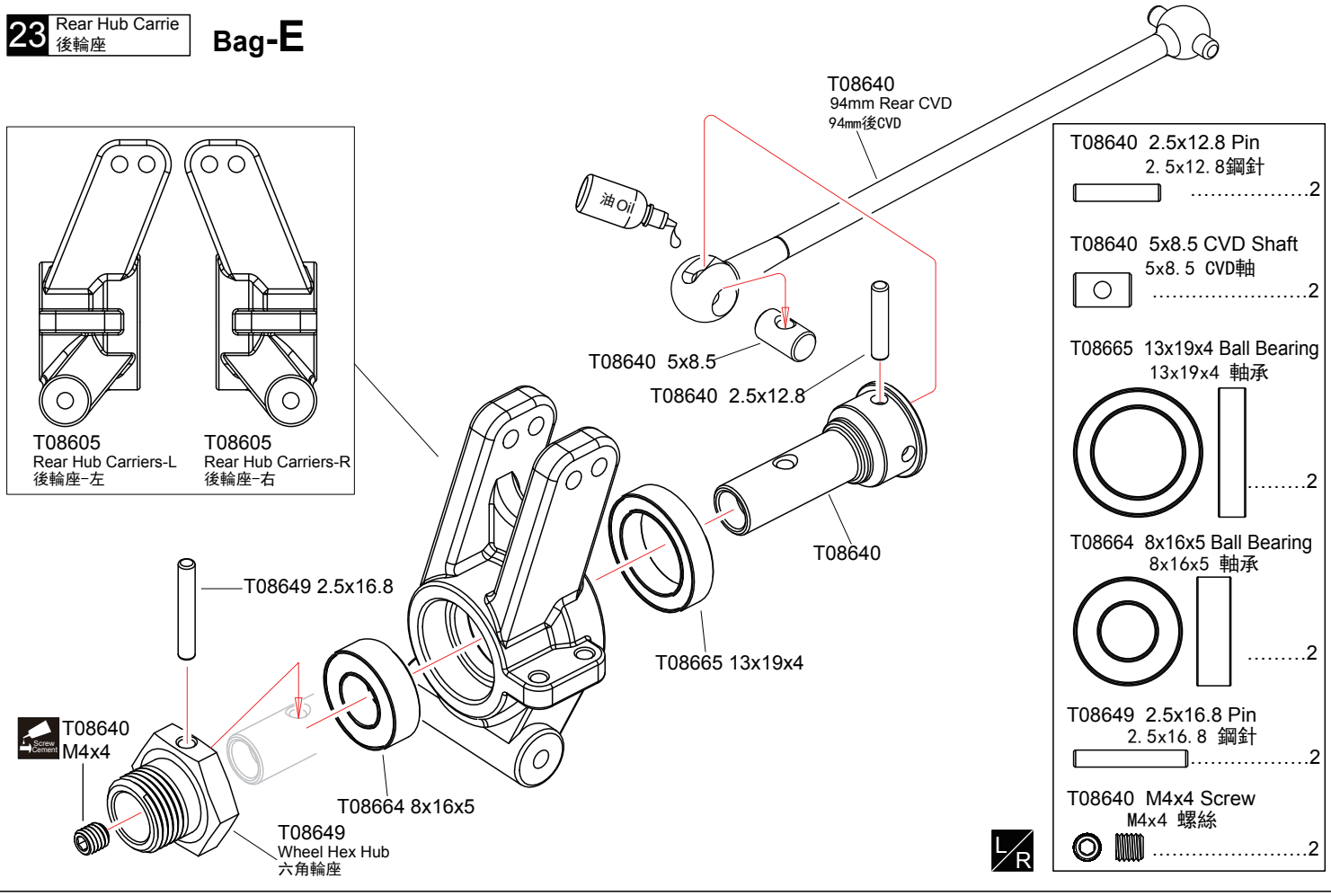

24 Rear Hub Carrie 後輪座 Bag-E

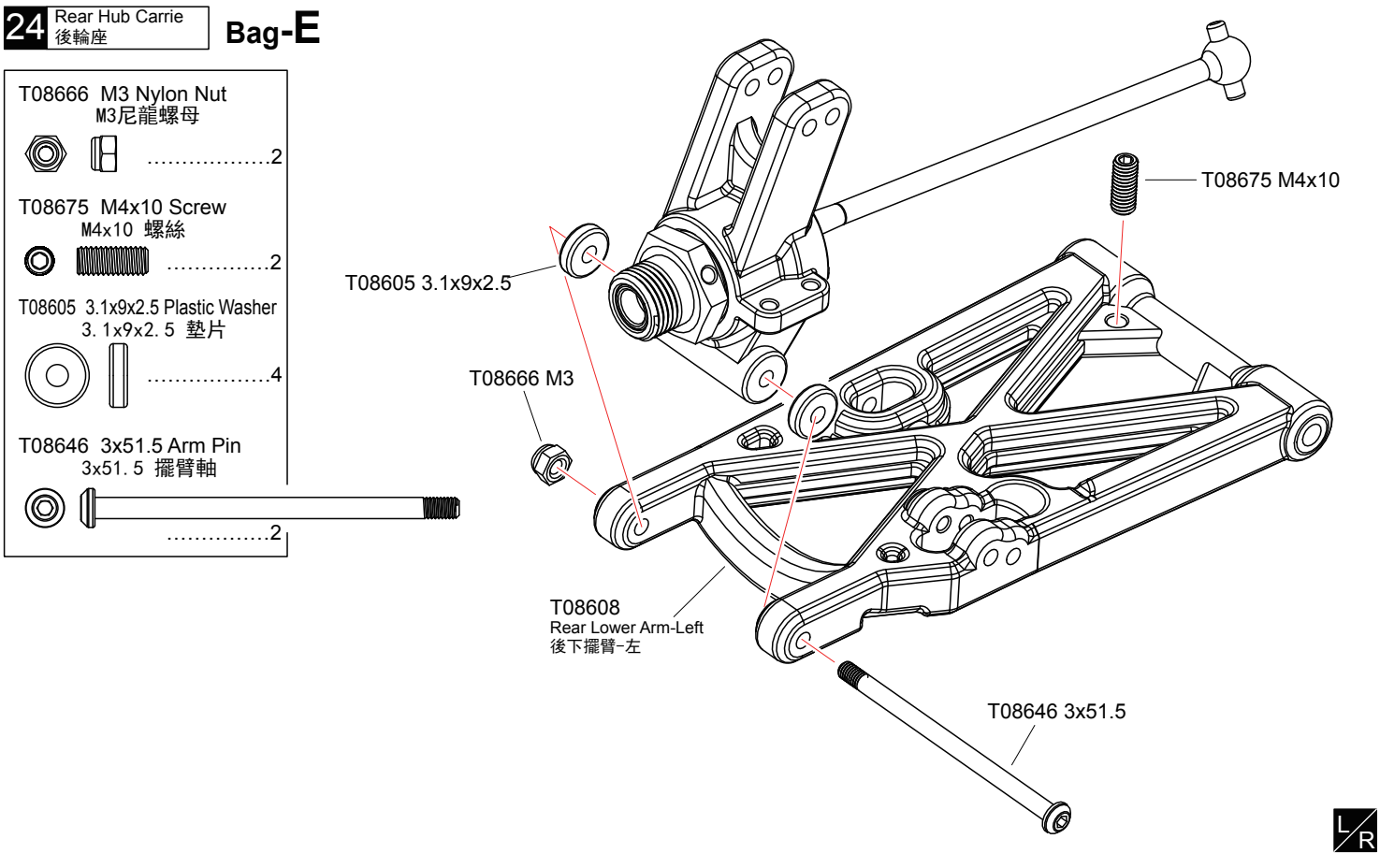

Apply threadlocker(screw cement) 打螺絲膠水

L/R Assemble both Left and Right 組裝左和右

Bag-E

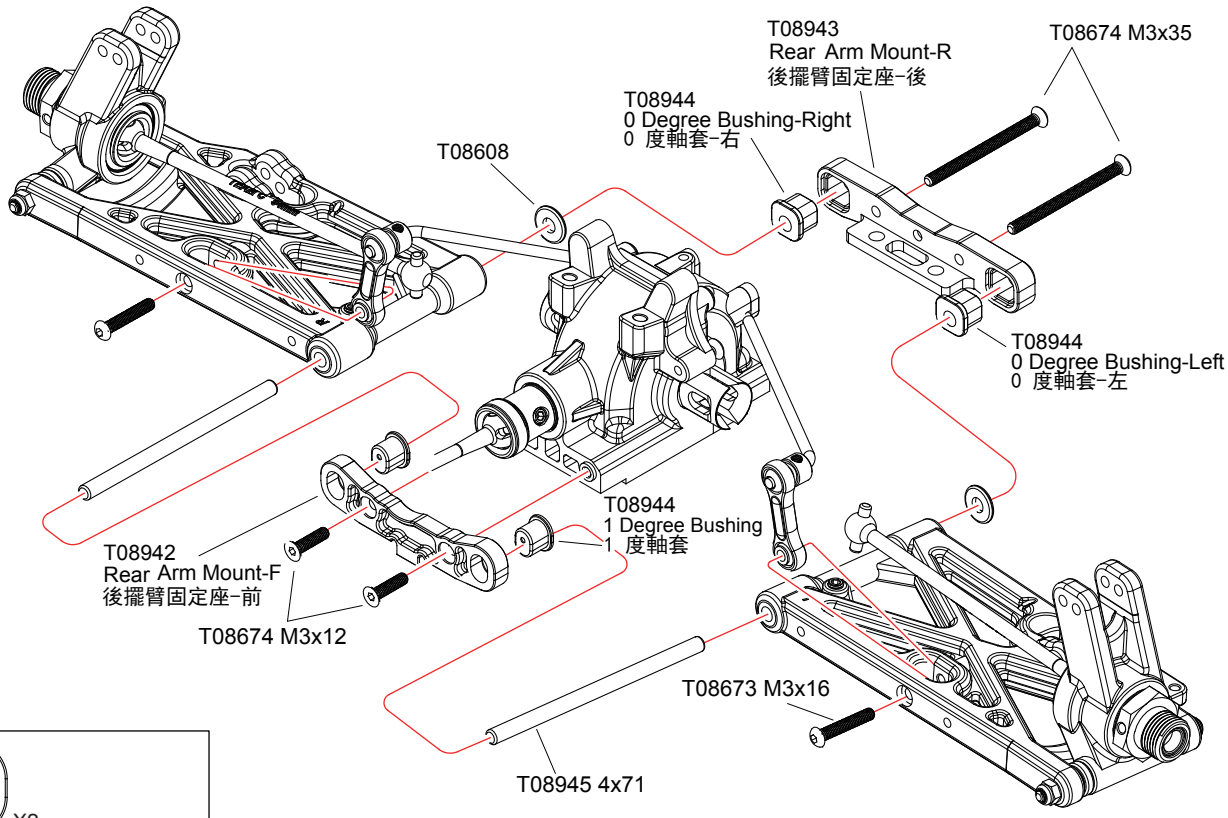

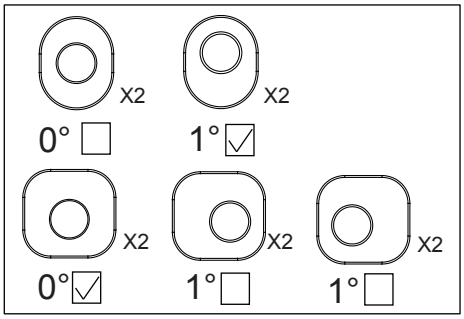

T08673 M3x16 Screw M3x16 螺絲	2
T08674 M3x35 Screw M3x35 螺絲	2
T08674 M3x12 Screw M3x12 螺絲	2
T08945 4x71 Arm Pin 4x71 擺臂軸	2

ANTI -SQUAT

	=3.5°	=2.5°	=1.5°
RR	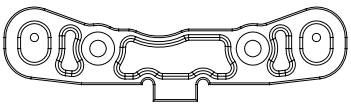	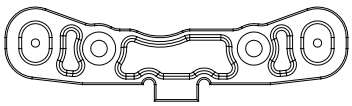	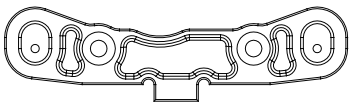
RF	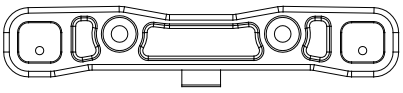	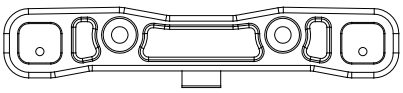	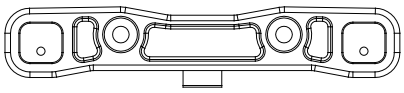
	=2.5°	=1.5°	=0.5°
RR	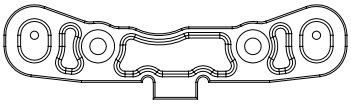	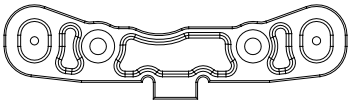	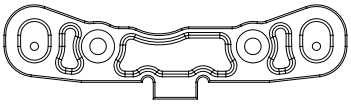
RF	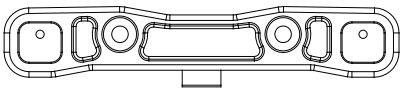	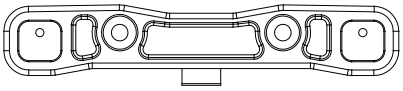	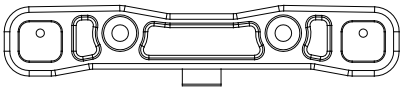

TOE -IN

	=4°	=3°	=2°
RF	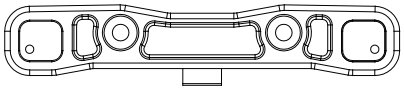	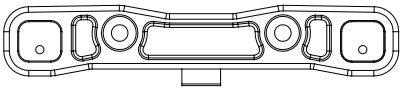	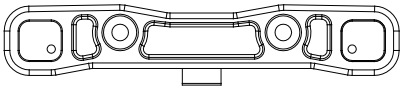

Apply threadlocker(screw cement)
打螺絲膠水

26 Rear Shock Tower 後避震架 Bag-E

T08674 M3x10 Screw
M3x10螺絲 2

T08673 M3x6 Screw
M3x6 螺絲 4

T08673 M3x10 Screw
M3x10 螺絲 1

T08673 M3.5x25 Screw
M3. 5x25 螺絲 2

T08622 Shock cap ball
避震蓋球頭 2

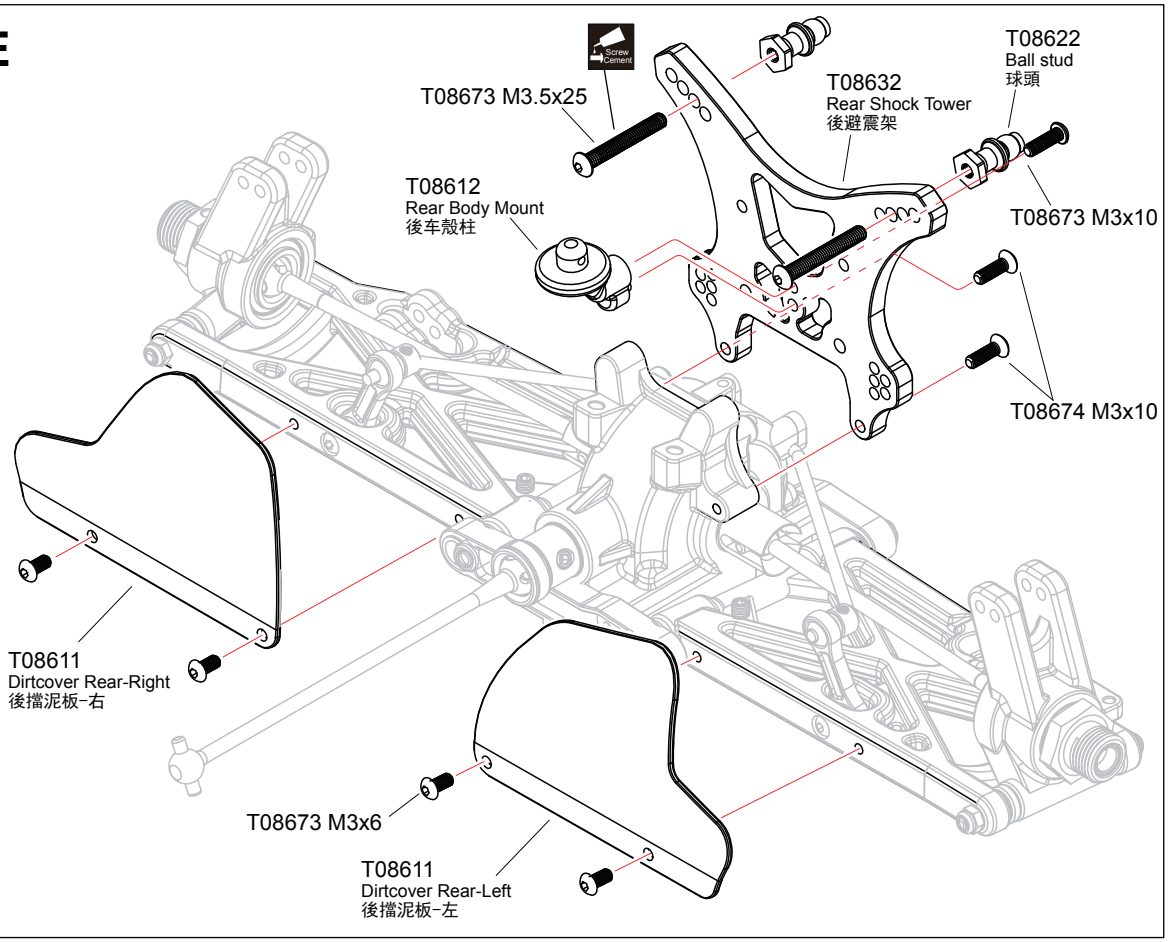

27 Wing 尾翼 Bag-E

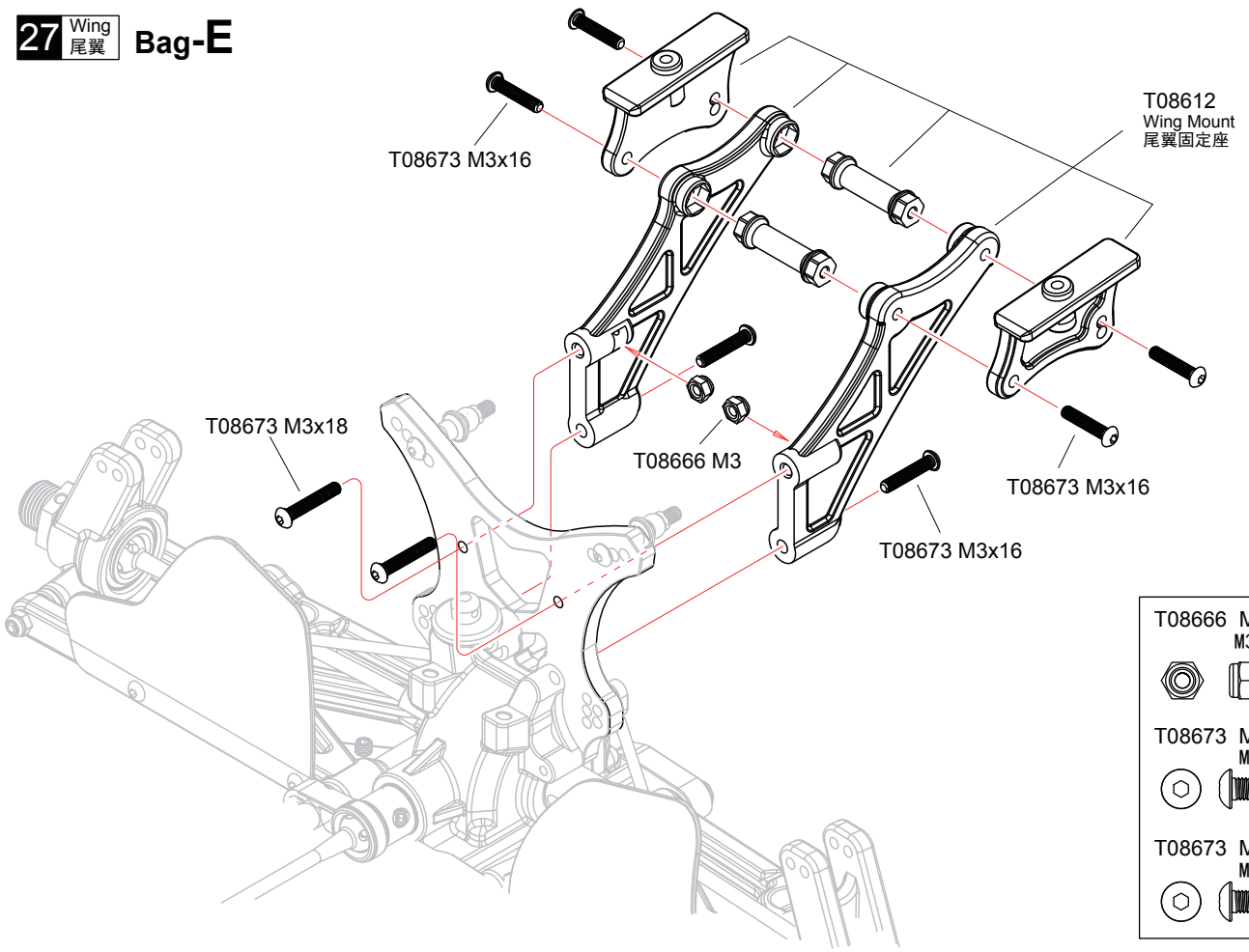

T08666 M3 Nylon Nut
M3尼龍螺母 2

T08673 M3x16 Screw
M3x16 螺絲 6

T08673 M3x18 Screw
M3x18 螺絲 ...2

1:1 Ture-to -scale diagram 圖形比例

x1 Assemble as many times as specified 需組裝数量

28 Rear Upper Turnbuckle 後上拉桿

Bag-E

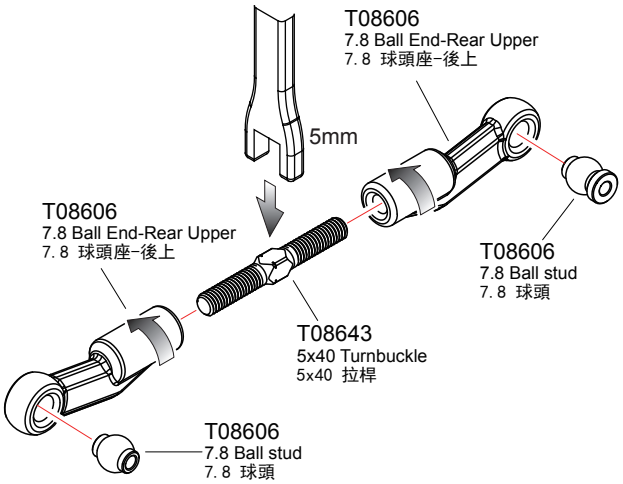

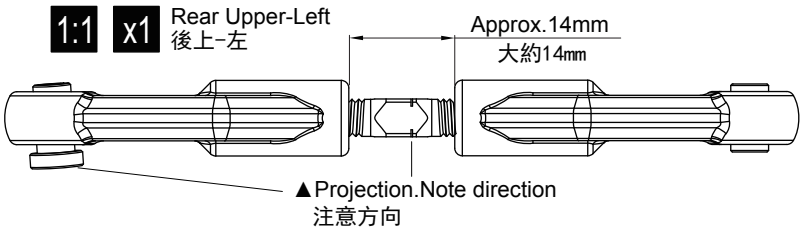

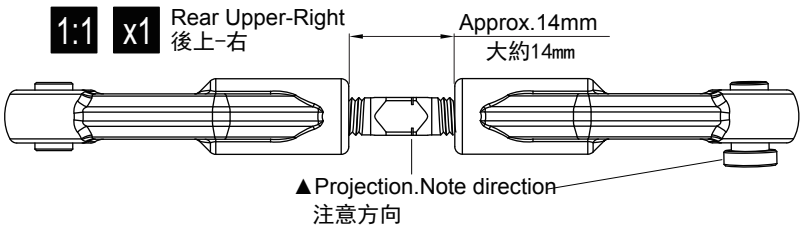

T08643 5x40 Turnbuckle 5x40 拉桿	T08606 7.8 Ball End-Rear Upper 7. 8 球頭座-後上	T08606 7.8 Ball stud 7. 8 球頭	T08606 7.8 Ball stud 7. 8 球頭
.....2	4	2	2

29 Rear Upper Turnbuckle 後上拉桿

Bag-E

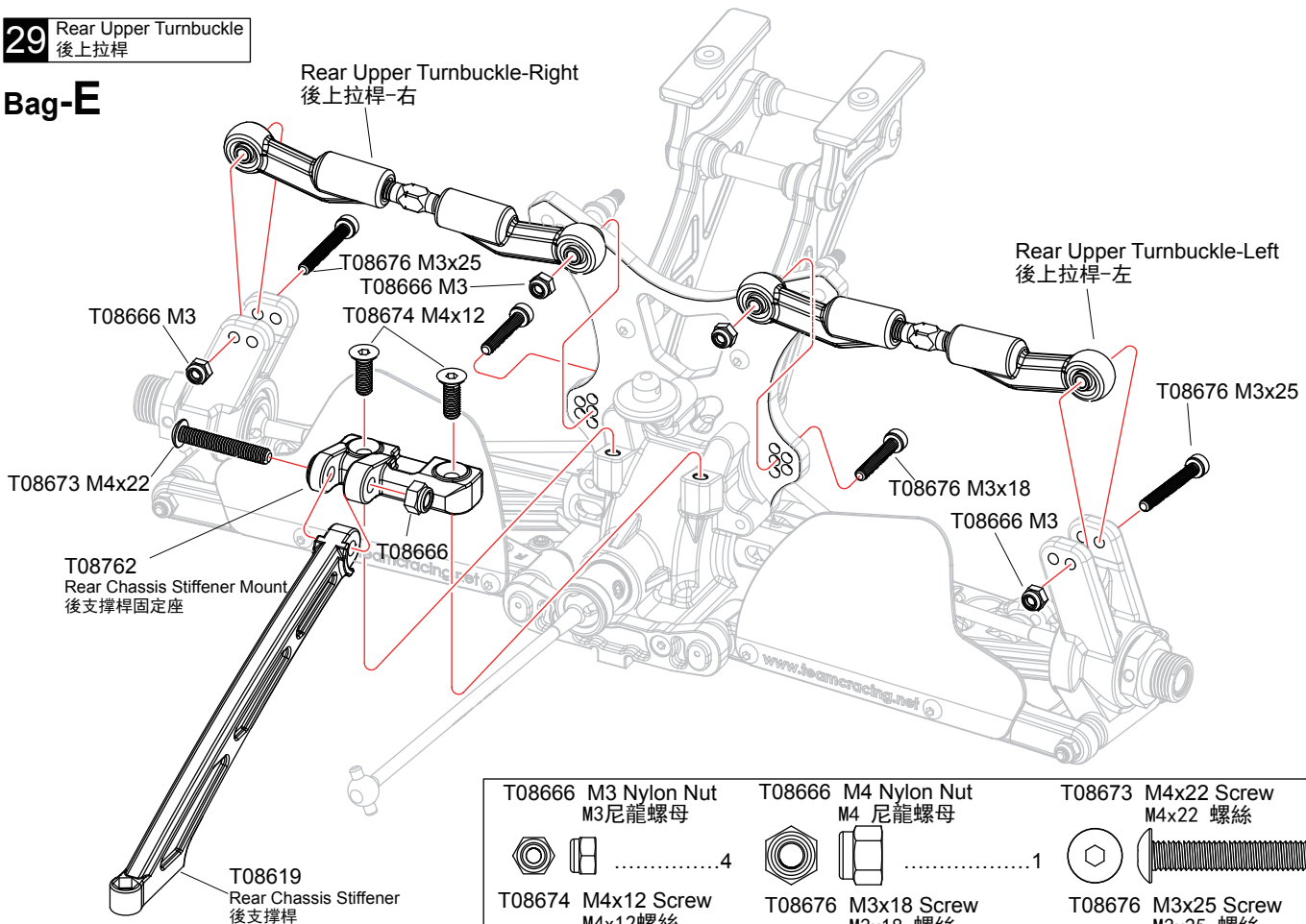

T08666 M3 Nylon Nut M3尼龍螺母 4	T08666 M4 Nylon Nut M4 尼龍螺母 1	T08673 M4x22 Screw M4x22 螺絲 1
T08674 M4x12 Screw M4x12螺絲 2	T08676 M3x18 Screw M3x18 螺絲 2	T08676 M3x25 Screw M3x25 螺絲 2

30 Rear Suspension 後懸吊系統 Bag-E

T08666 M3 Nylon Nut M3尼龍螺母 1	T08674 M3x12 Screw M3x12 螺絲 1
T08674 M3x10 Screw M3x10螺絲 1	T08674 M4x14 Screw M4x14螺絲 ...4

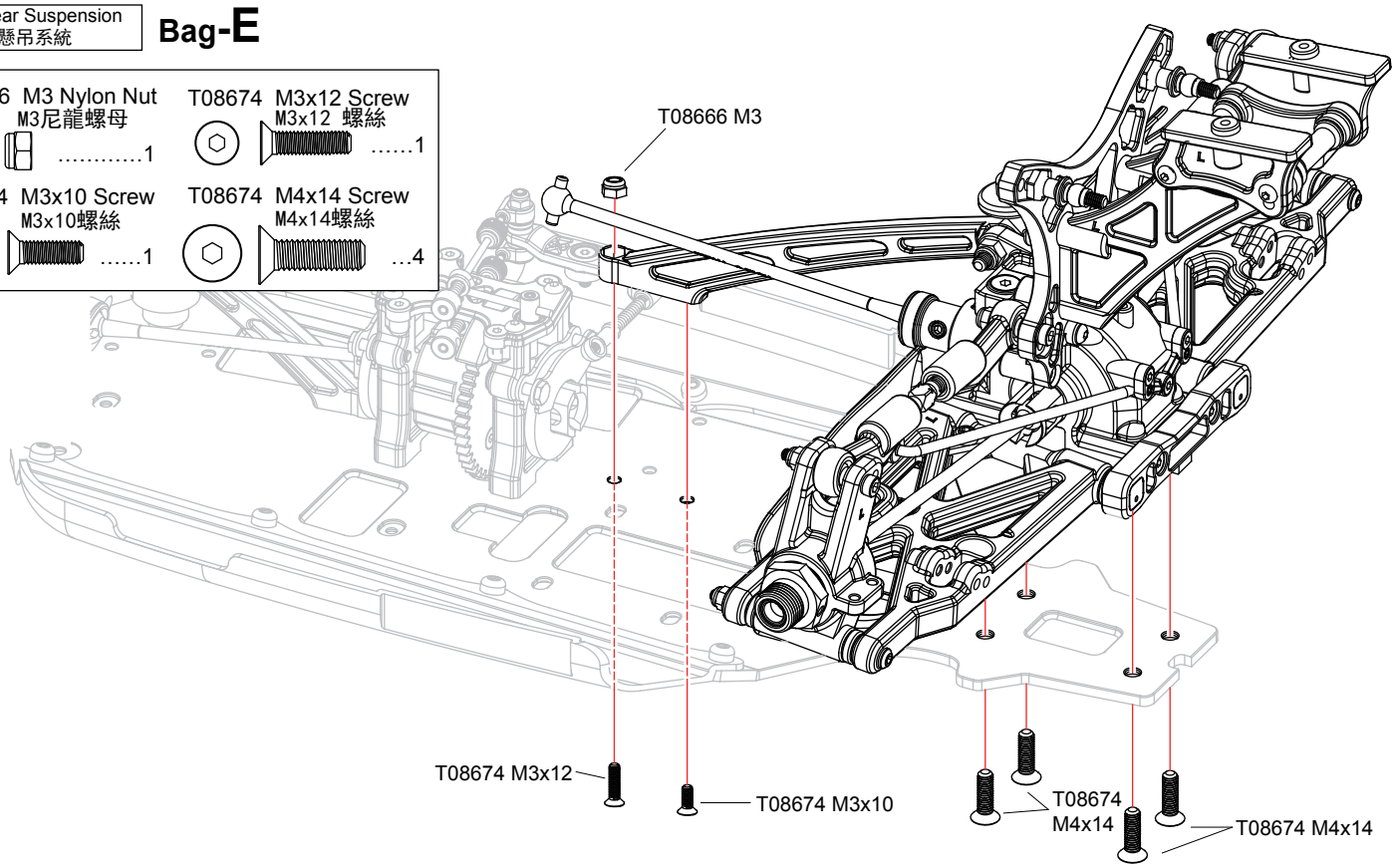

31 Shock 避震器 Bag-F

T08627 2.75mm Plastic Washer 2.75mm 塑膠墊片	4
T08627 1mm Plastic Washer 1mm 塑膠墊片	4
T08627 3.3x1.9 O-ring 3.3x1.9 O環	8
T08625/T08626 9x1.0 O-ring 9x1.0 O環	4
T08624 2.7x5.8x0.5 Washer 2.7x5.8x0.5 墊片	4
T08624 M2.5 Nylon Nut M2.5 尼龍螺母	4
T08624 6.8 Ball stud 6.8 球頭	4
T08622 6.8 Ball End 6.8 球頭座	4

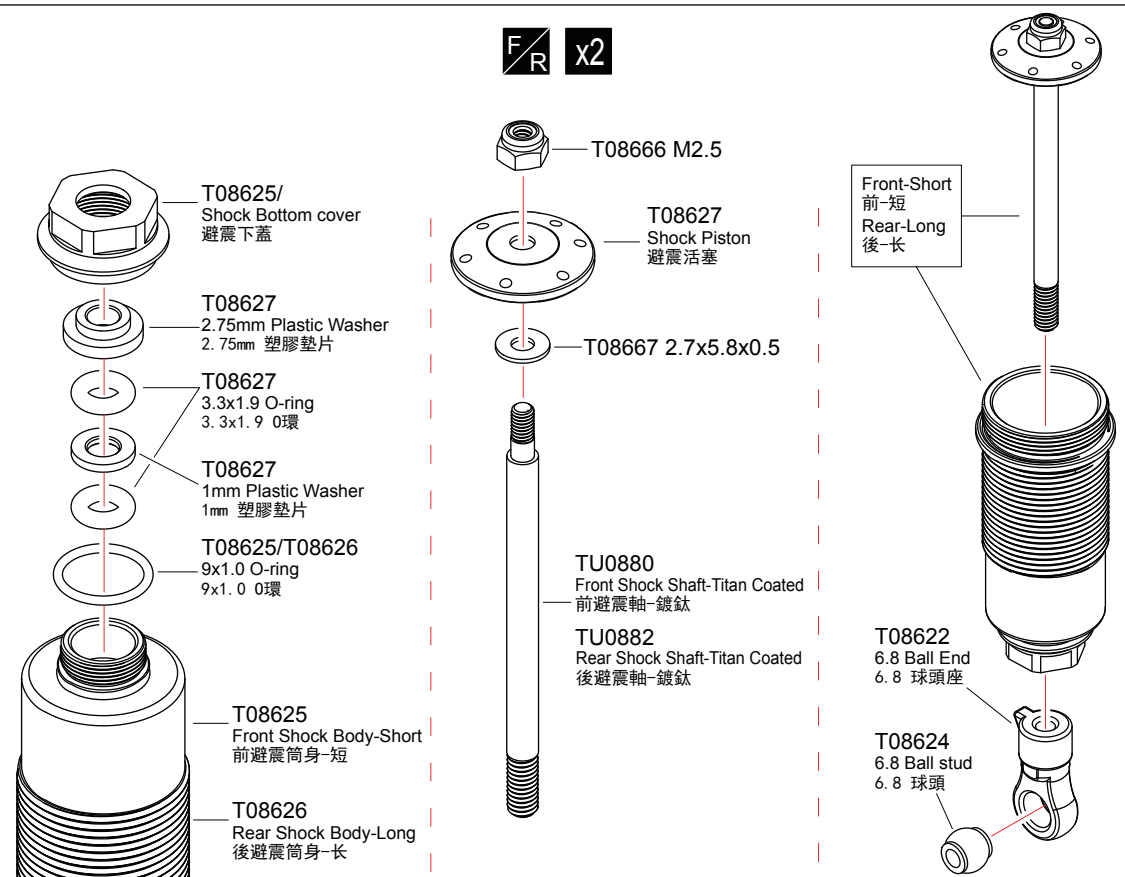

F/R Assemble both Front and Rear 組裝前和後

x2 Assemble as many times as specified 需組裝数量

32 Shock 避震器 Bag-F

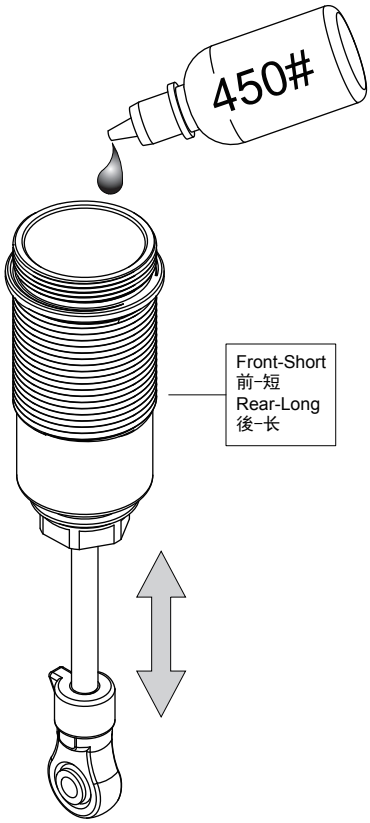

F/R x2

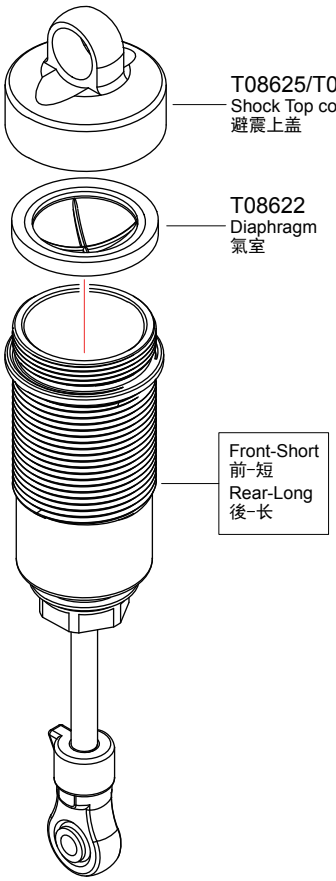

33 Shock 避震器 Bag-F

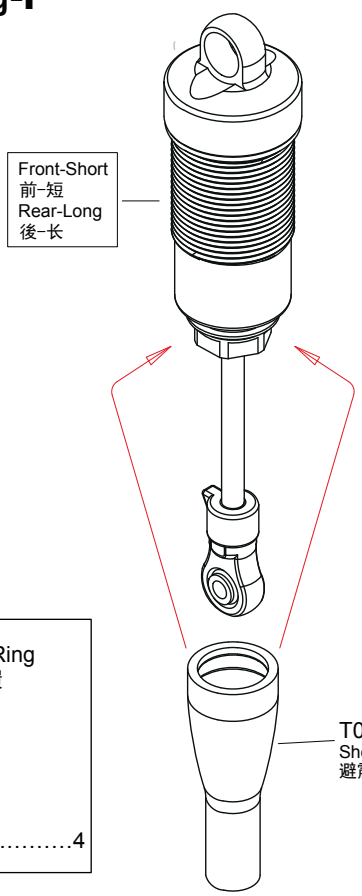

T08625/T08626 O-Ring
0環

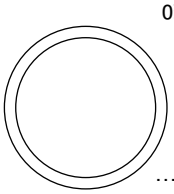

.....4

F/R x2

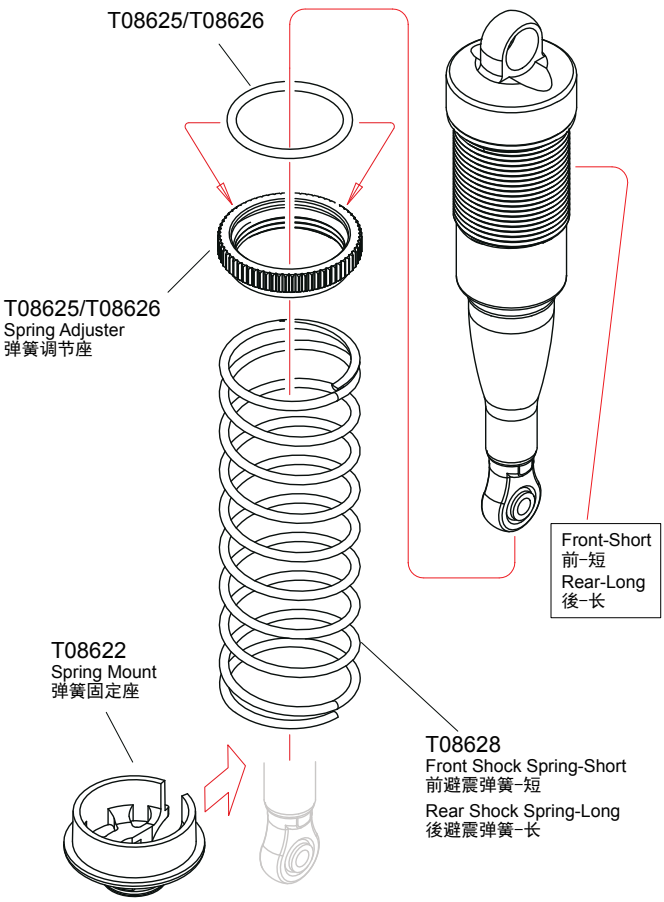

F/R Assemble both Front and Rear
組裝前和後

x2 Assemble as many times as specified
需組裝数量

34 Front Shock 前避震器

Bag-F

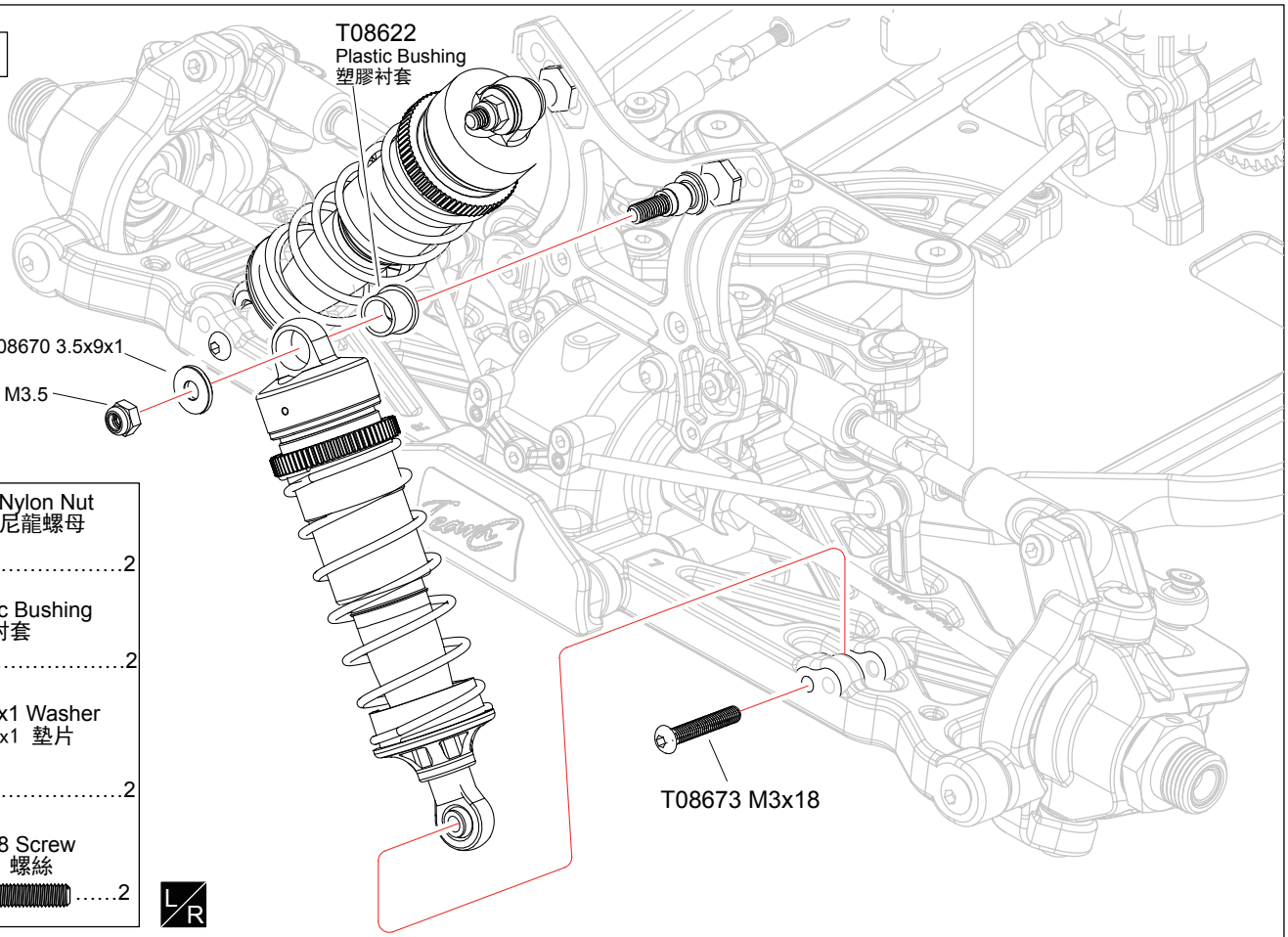

T08666 M3.5 Nylon Nut M3. 5 尼龍螺母	2
T08622 Plastic Bushing 塑膠衬套	2
T08670 3.5x9x1 Washer 3. 5x9x1 墊片	2
T08673 M3x18 Screw M3x18 螺絲	2

L/R

35 Rear Shock 後避震器

Bag-F

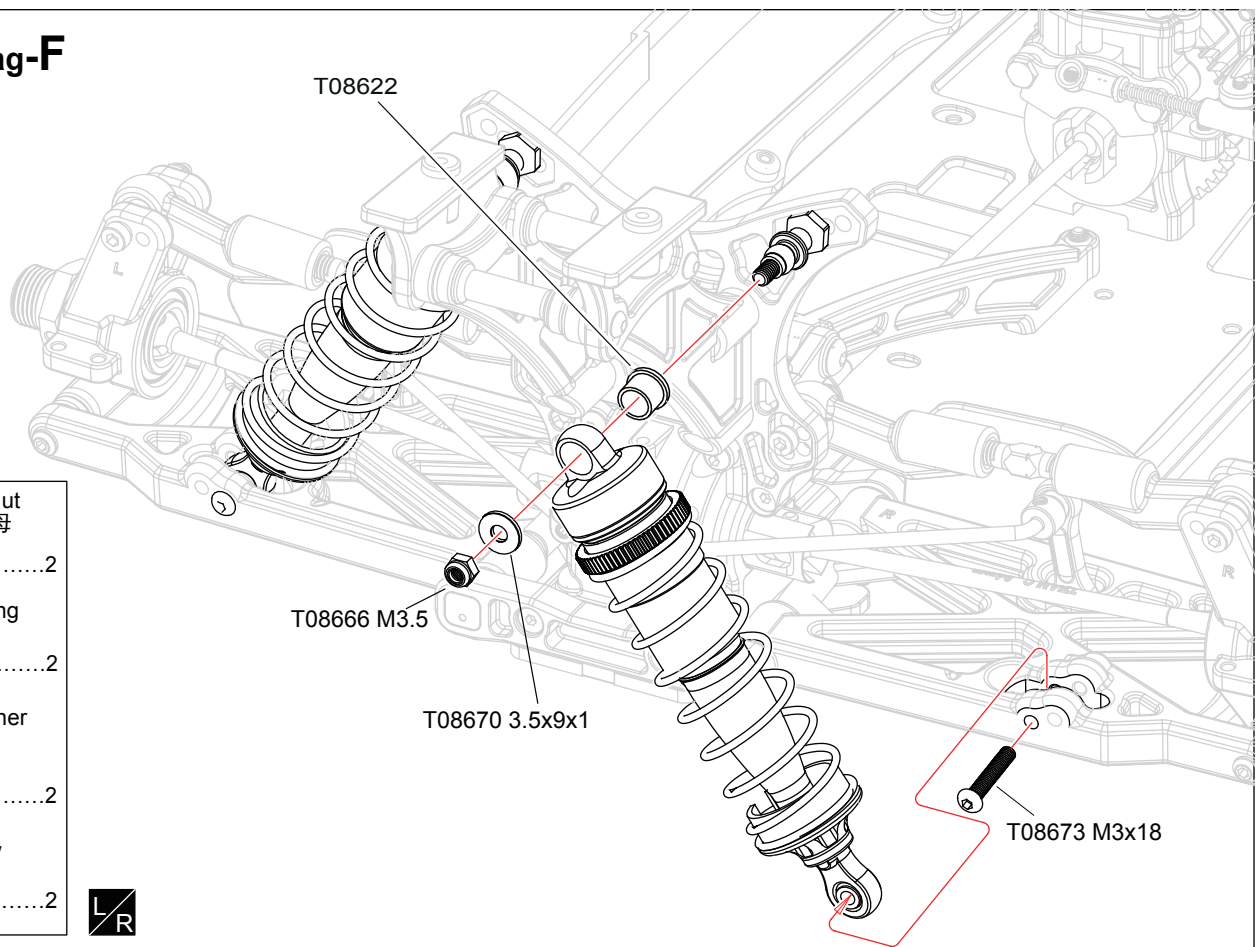

T08666 M3.5 Nylon Nut M3. 5 尼龍螺母	2
T08622 Plastic Bushing 塑膠衬套	2
T08670 3.5x9x1 Washer 3. 5x9x1 墊片	2
T08673 M3x18 Screw M3x18 螺絲	2

L/R

F/R Assemble both Front and Rear 組裝前和後

x2 Assemble as many times as specified 需組裝数量

L/R Assemble both Left and Right 組裝左和右

36 Servo 伺服機 Bag-B

T08793 M3x15 Screw
M3x15 螺絲 8

T02081 3x7x0.8 Washer
3x7x0. 8 墊片 8

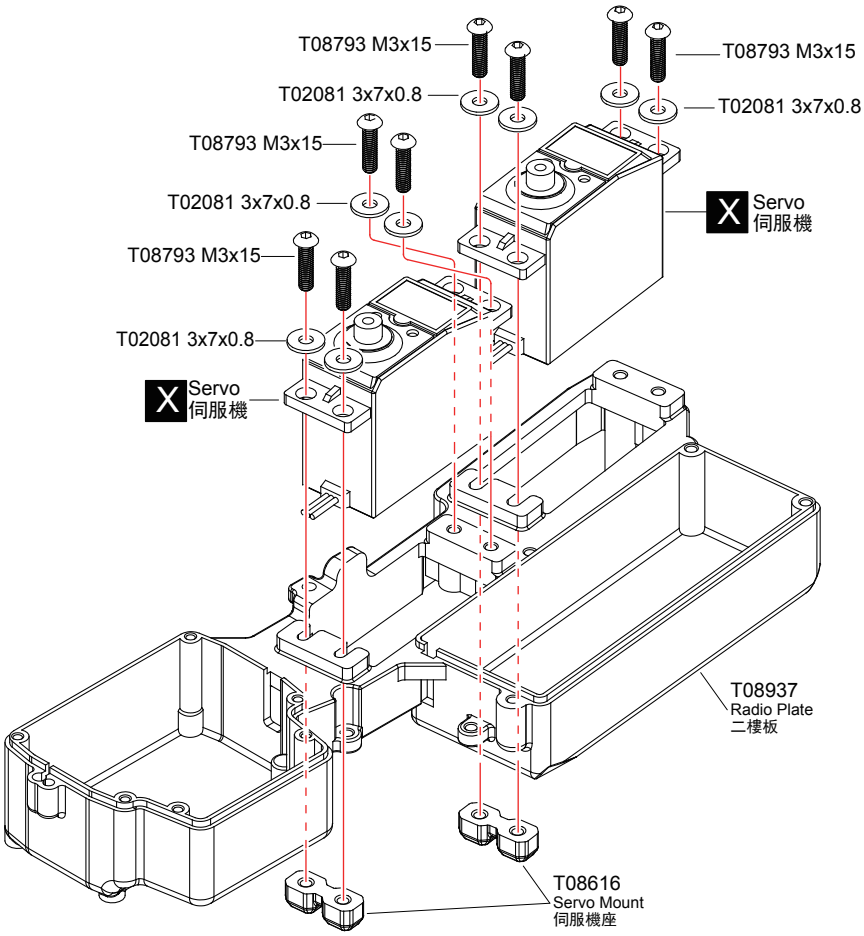

37 Battery/Receiver 電池/接收機 Bag-B Bag-L

T08946 M2.5x8 Screw
M2. 5x8 螺絲

T08946 M2.5x10 Screw
M2. 5x10 螺絲

T08673 M3x5 Screw
M3x5 螺絲 1

T08673 M3x8 Screw
M3x8 螺絲 3

T08673 M3x10 Screw
M3x10 螺絲 3

T08675 M3x3 Screw
M3x3 螺絲 1

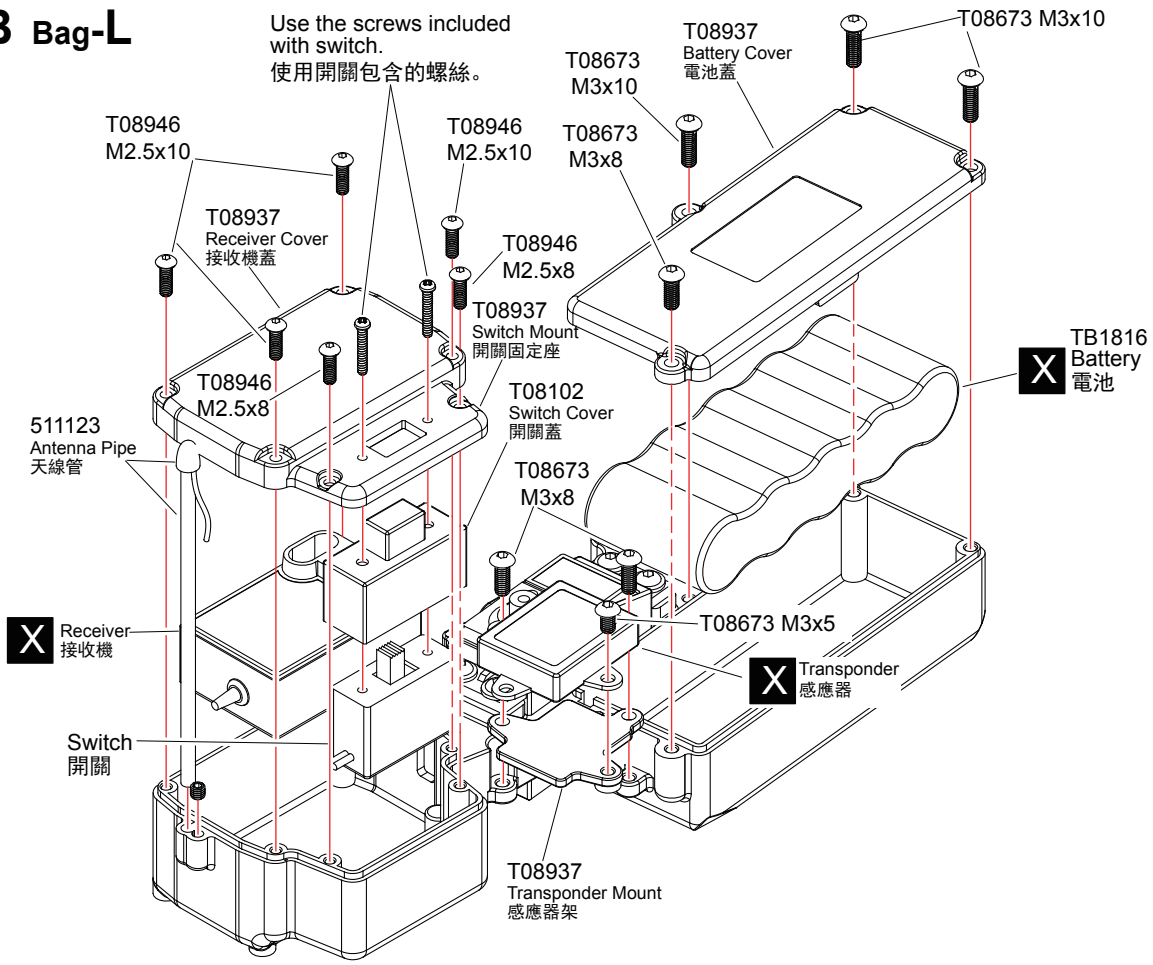

X Must be purchased separately
需另購物品

38 Servo/Battery/Receiver 伺服機/電池/接收機 Bag-B

T08674 M3x10 Screw
M3x10螺絲 8

T08673 M3x10 Screw
M3x10 螺絲 1

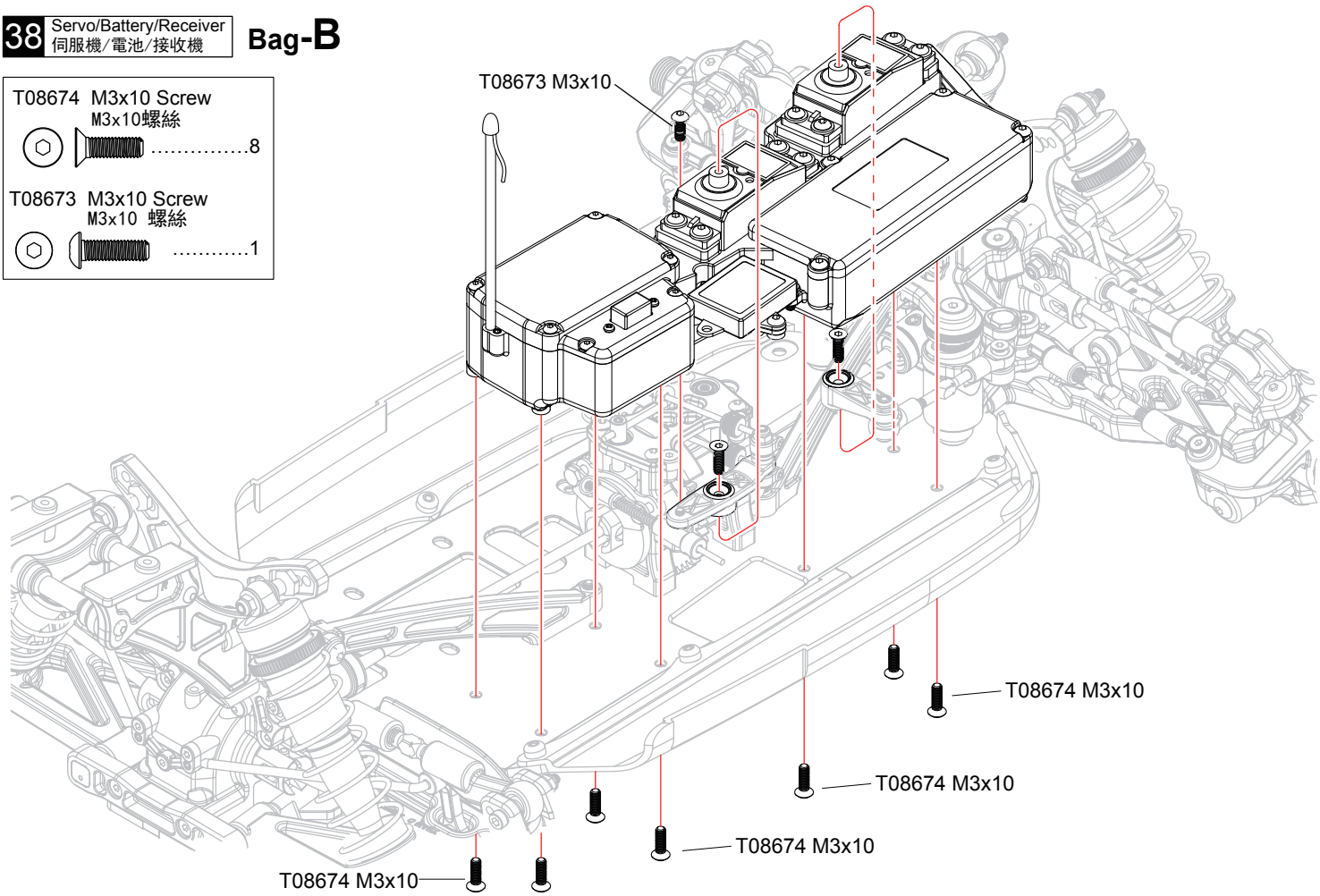

39 Fueltank 油箱 Bag-G

T08615 M3x12 Screw
M3x12 螺絲 2

T08615 3x7x0.8 Washer
3x7x0. 8 墊片 2

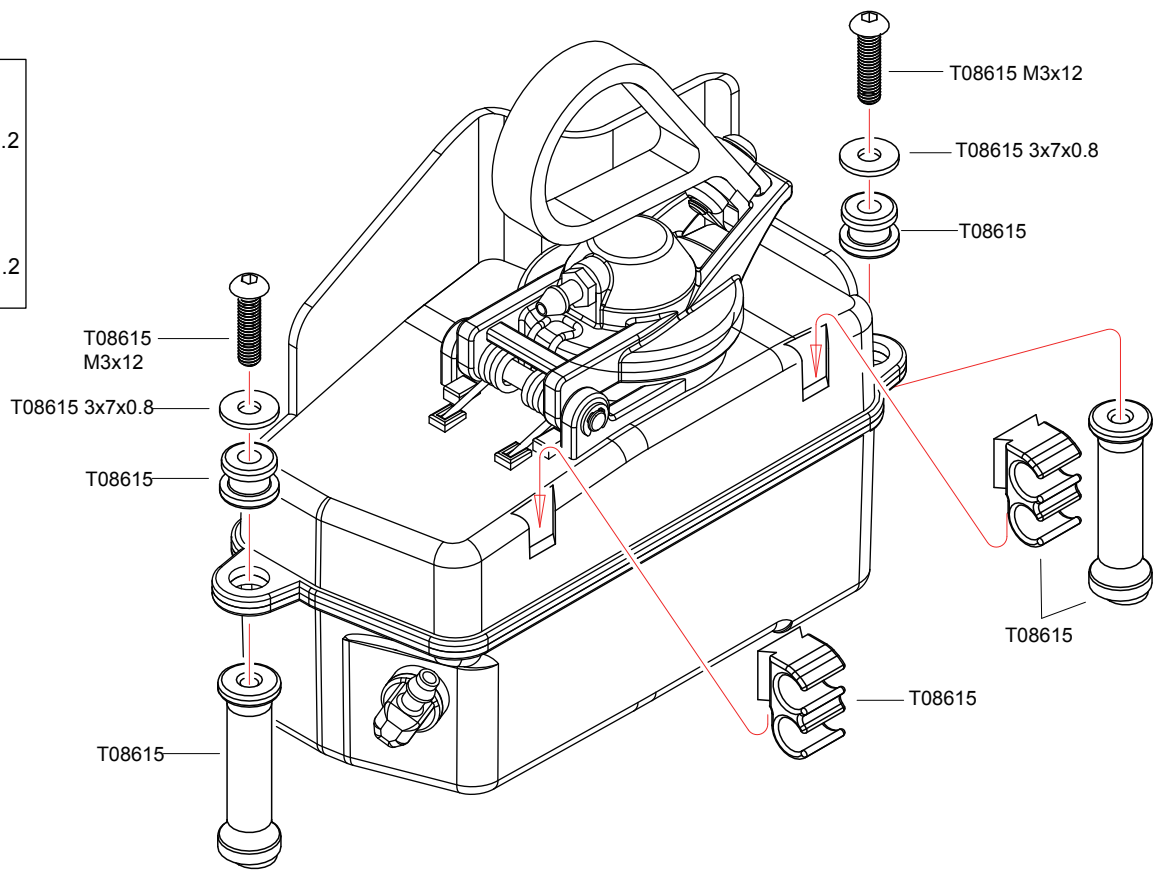

X Must be purchased separately
需另購物品

40 Fueltank 油箱 Bag-G

T08674 M3x10 Screw
M3x10螺絲 2

T08674 M3x10

41 Engine 引擎 Bag-H

T08676 M3x12

81005

X Engine 引擎

T08676 M3x10

86000 5.1x8x0.2

T08661 5x11x4

T08661 5x11x4

86000 5.1x8x0.2

T08657
Clutch Shoe
離合器磨擦片

T08306
Screw Washer
螺絲墊片

T08783
Clutch Gear 16T
離合器齒輪 16T

T08784
Engine Nut
引擎螺帽

T08657
Clutch Spring
離合器弹簧

T08782
Flywheel
飞輪

T08782
Flywheel Collet
飞輪锥套

T08655
Engine Mount-Right
引擎固定座-右

T08655
Engine Mount-Left
引擎固定座-左

T08676 M3x10 Screw
M3x10螺絲 1

86000 5.1x8x0.2 Washer
5. 1x8x0. 2 墊片 4

T08661 5x11x4 Ball Bearing
5x11x4 軸承 2

T08676 M3x12 Screw
M3x12螺絲 4

81005 M3 Spring Washer
M3弹簧墊片 4

X Must be purchased separately
需另購物品

42 Air Filter 空濾器 Bag-H

T08621 M3x8 Screw
M3x8 螺絲 1

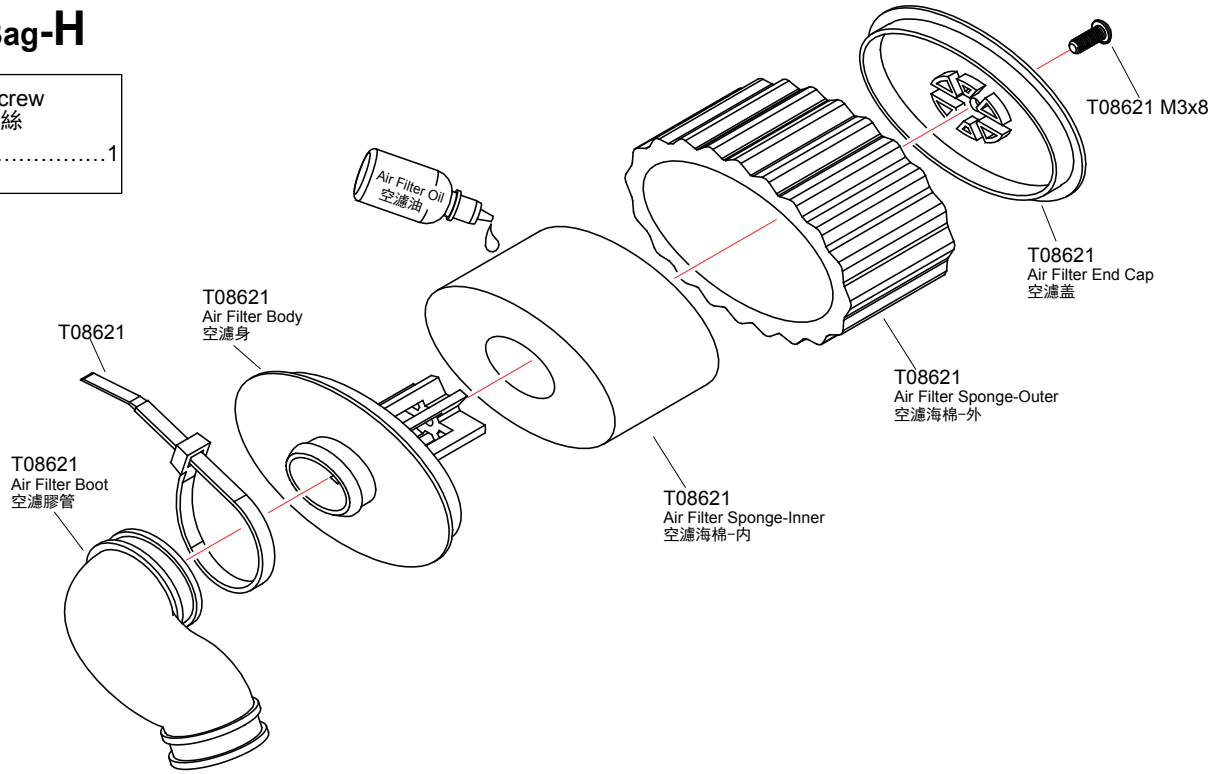

43 Air Filter/Tunedpipe 空濾器/排氣管 Bag-H

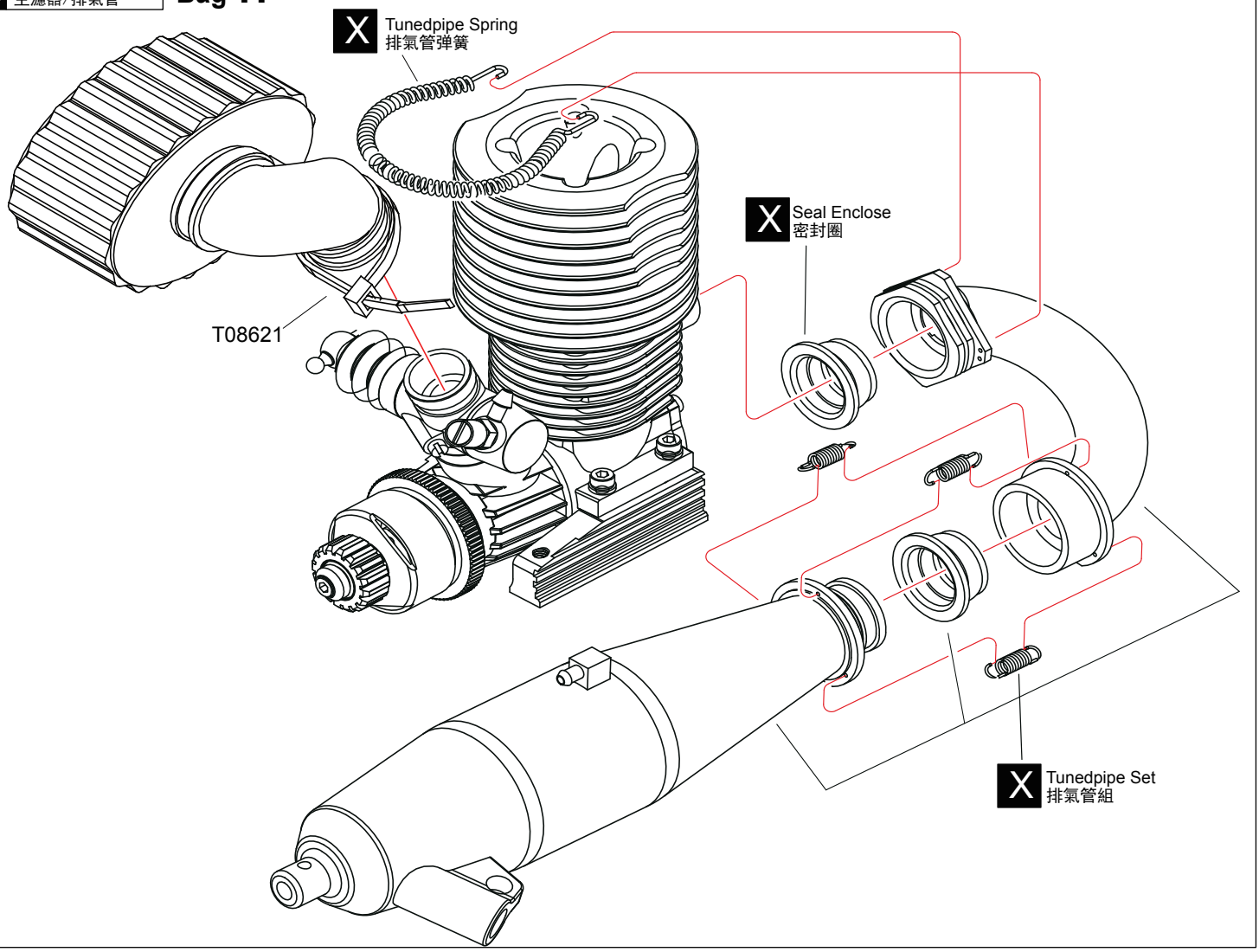

X Must be purchased separately
需另購物品

44 Engine 引擎 Bag-H

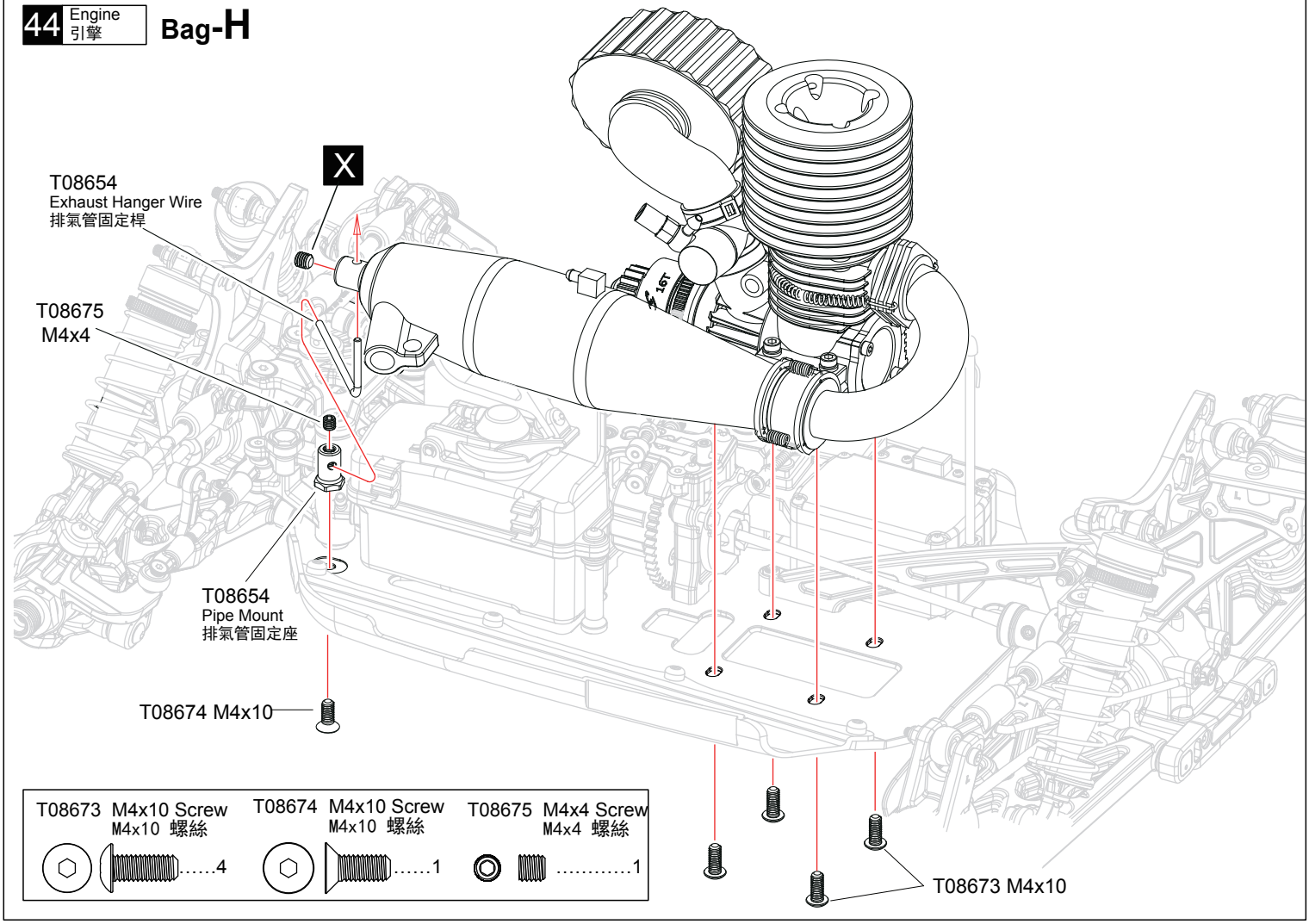

45 Oil Pipe 油管 Bag-H

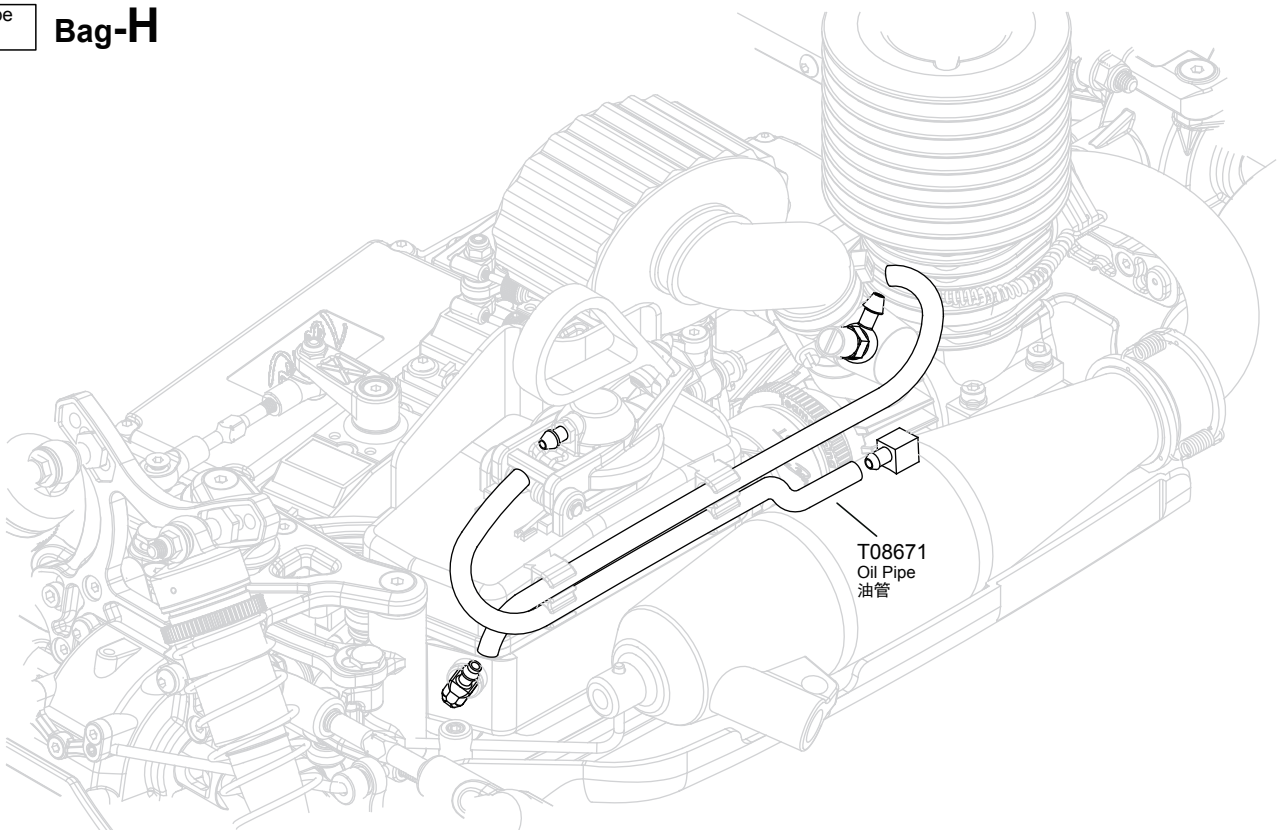

X Must be purchased separately
需另購物品

46 Wing 尾翼 Bag-I

T08674 M3x12 Screw
M3x12 螺絲 2

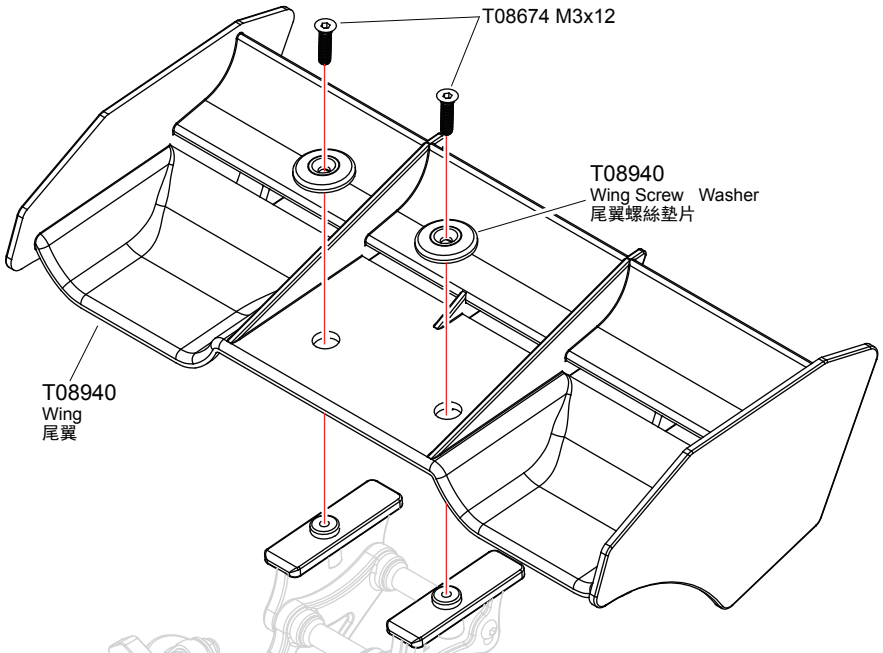

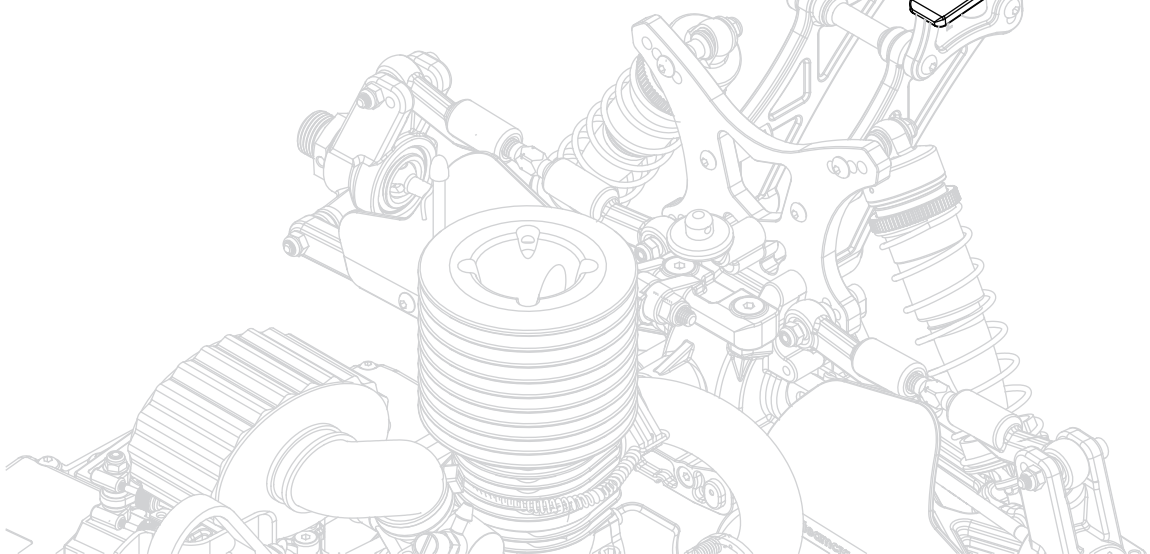

47 Tyre 輪胎 Bag-J

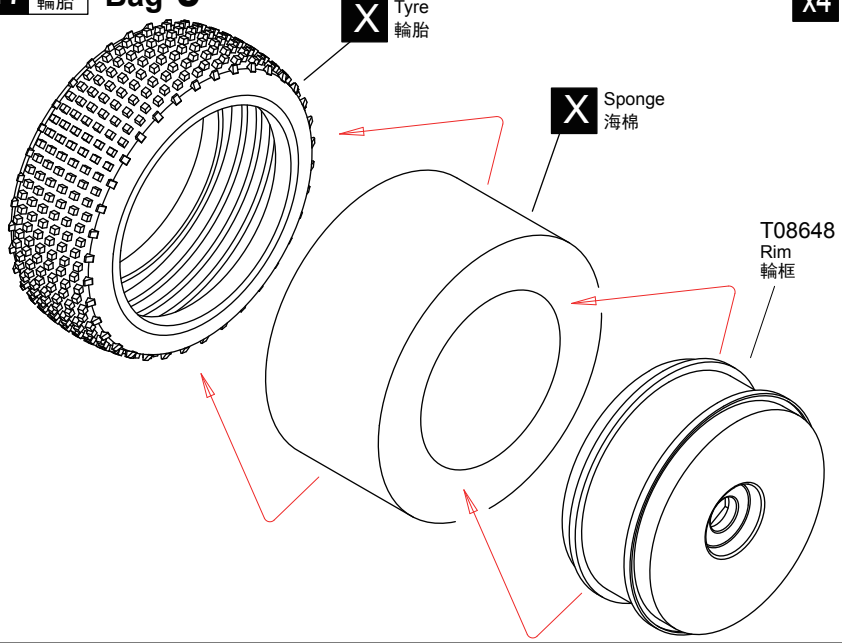

x4

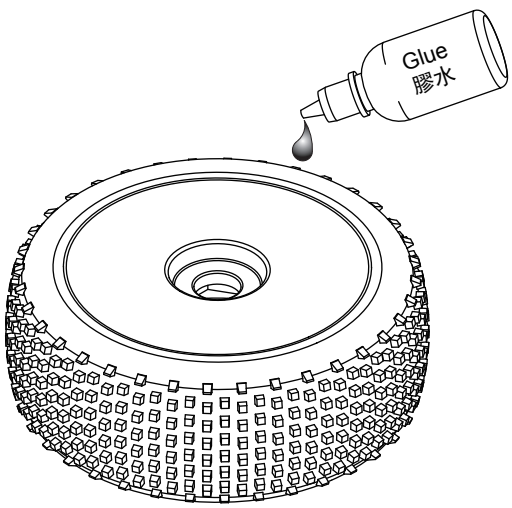

x4 Assemble as many times as specified
需組裝数量

X Must be purchased separately
需另購物品

48 Tyre 輪胎 Bag-D Bag-E

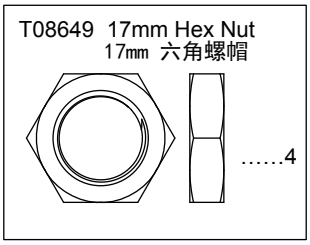

T08649
17mm Hex Nut
17mm 六角螺帽

L/R

49 Body 车壳 Bag-K

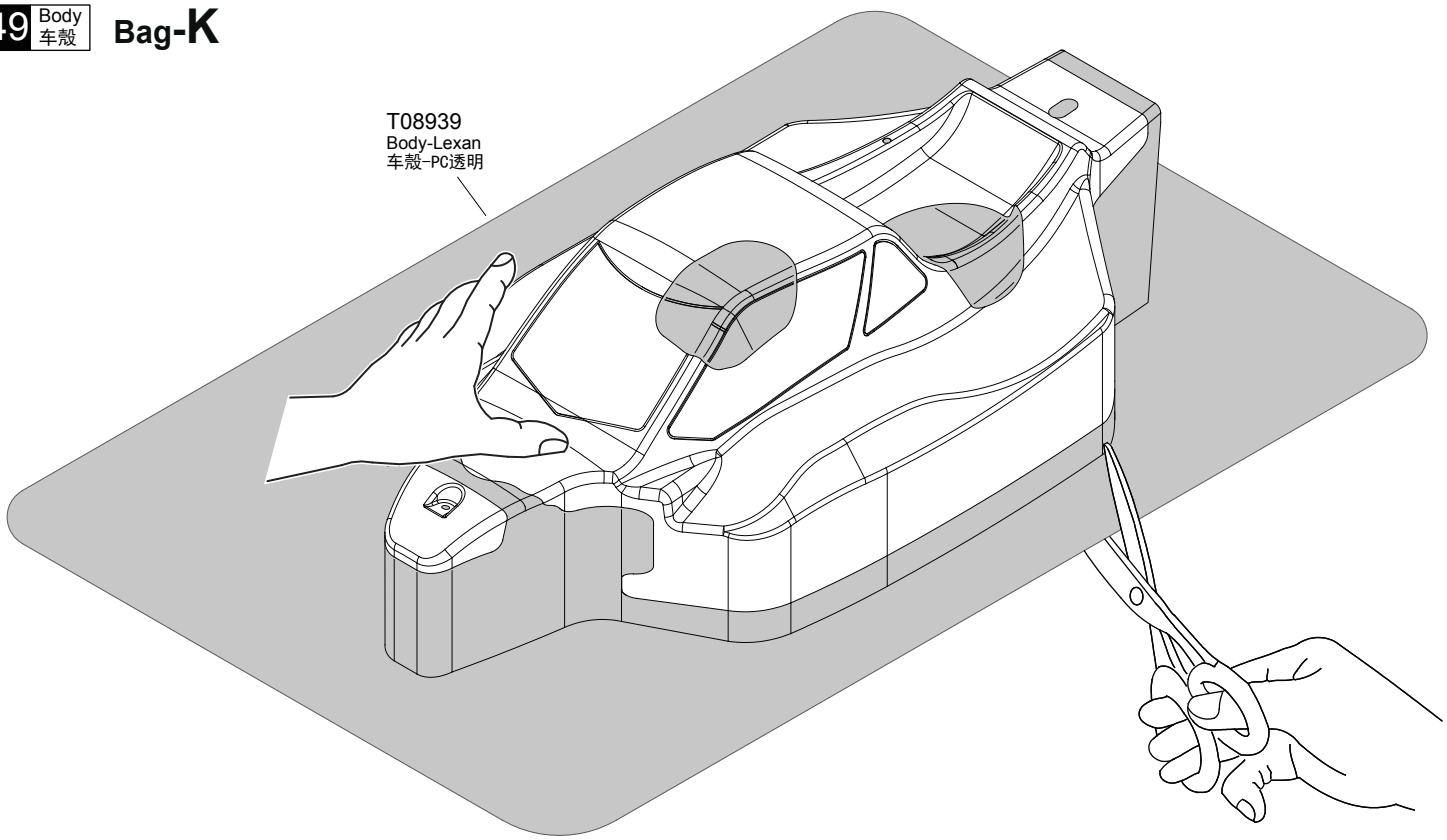

L/R Assemble both Left and Right
組裝左和右

50 Body 車殼 Bag-L

Mask the windows from the inside.
在車窗内臂贴上遮盖贴纸。

Paint the body shell from the inside using spray colors.
在车殼内臂喷漆。

51 Body 車殼 Bag-L

T08660 Mid Clip
中號固定夾 2

T08673 M3x6 Screw
M3x6 螺絲 1

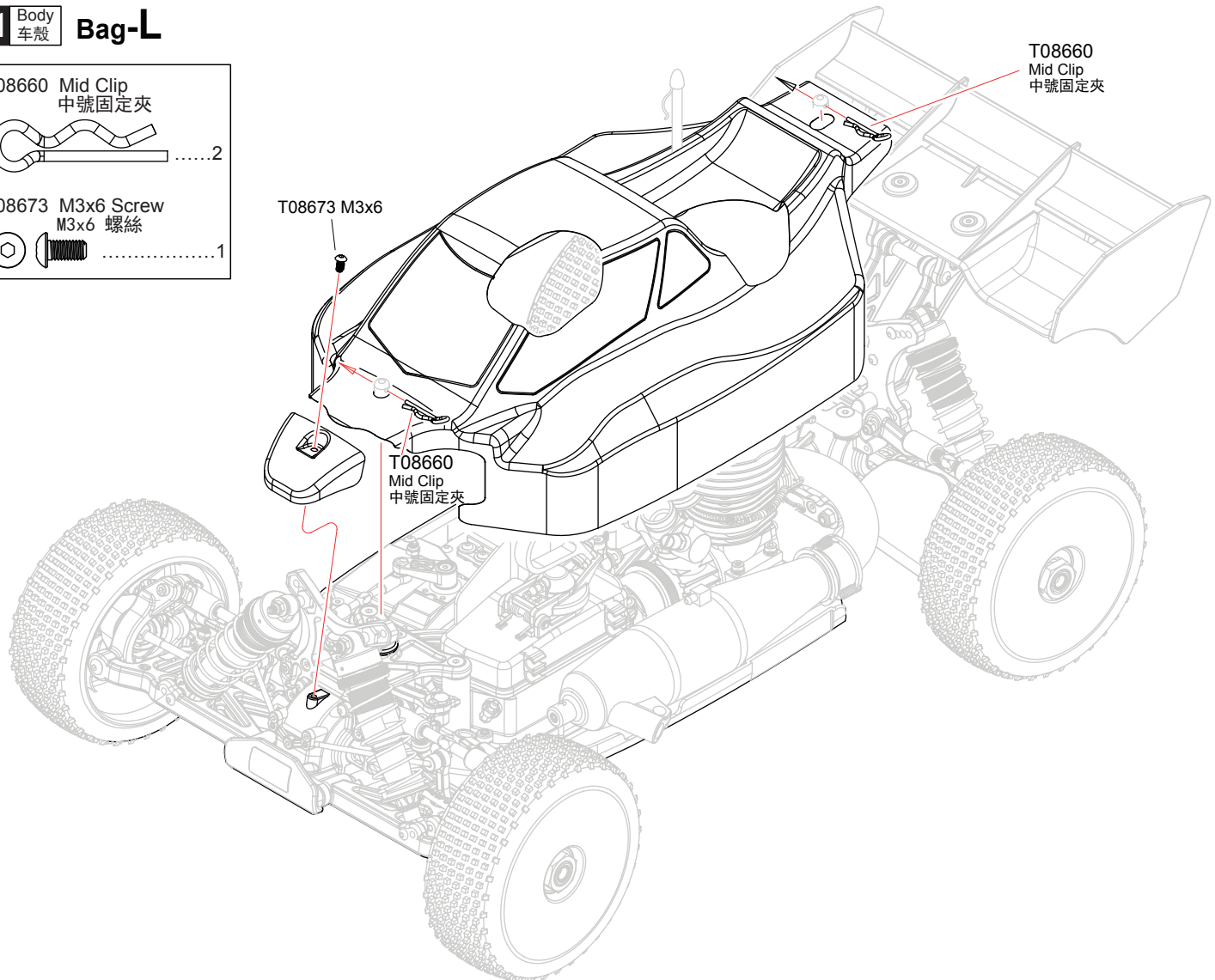

Exploded View

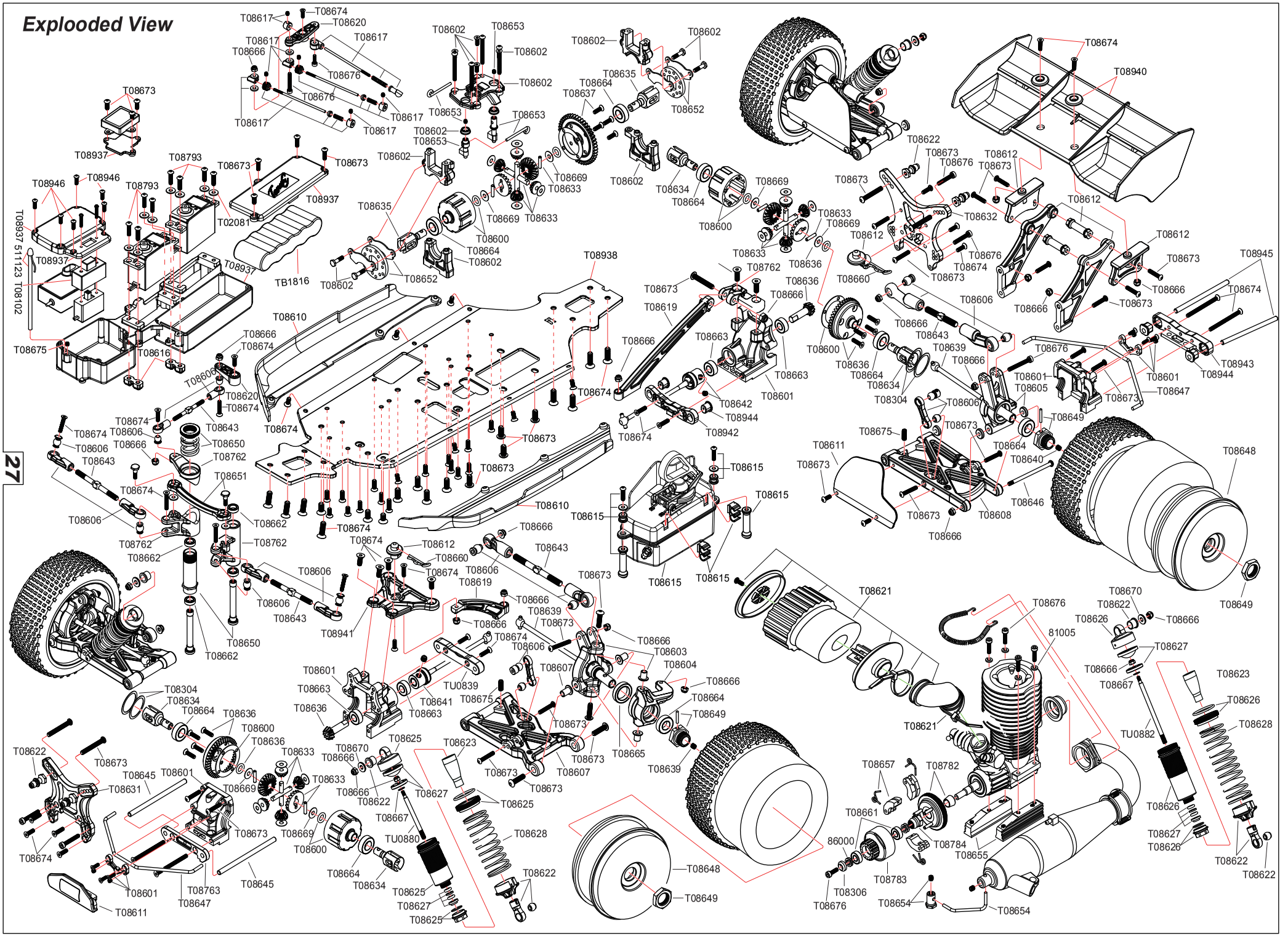

Parts list for T8 V3 off-road buggy - 1　T8 V3越野車配件包-1

T08600

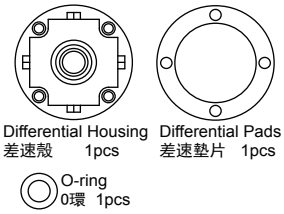

T08601

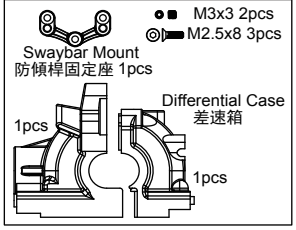

T08602

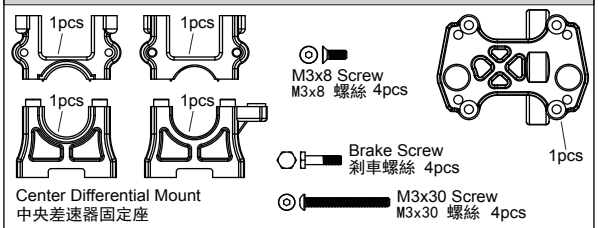

T08603

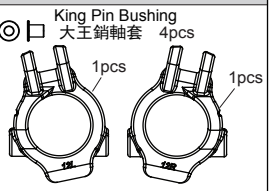

T08604

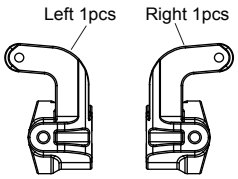

T08605

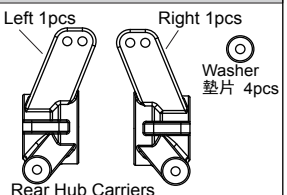

T08606

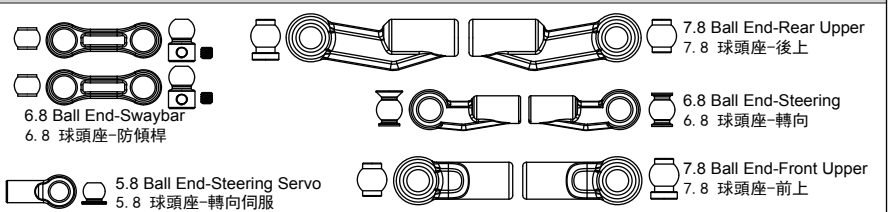

T08607

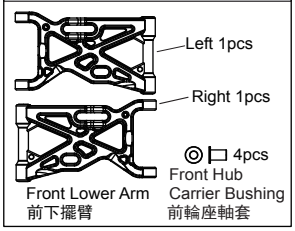

T08608

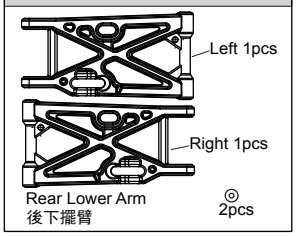

T08609

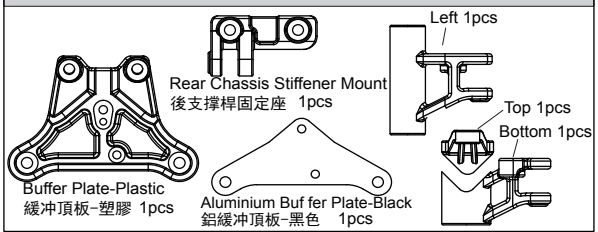

T08610

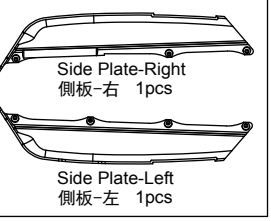

T08611

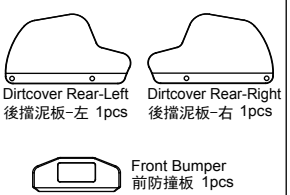

T08612

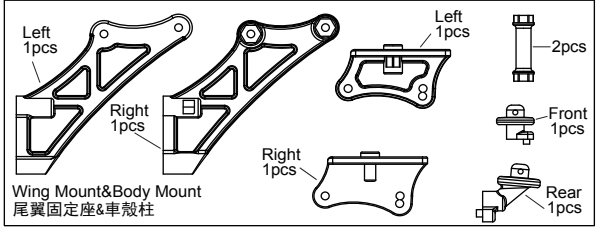

T08615

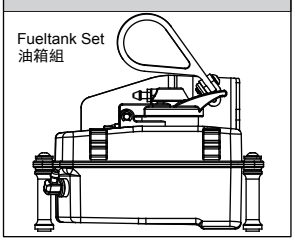

T08616

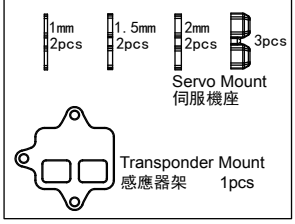

T08618

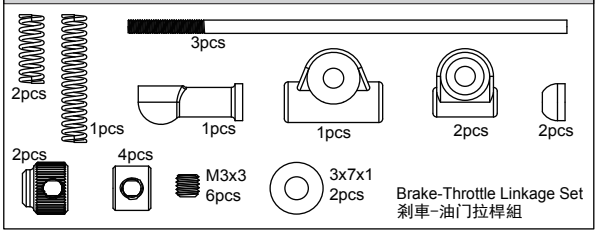

T08619

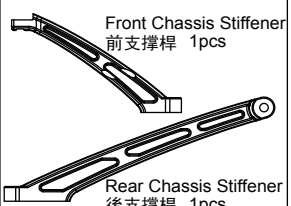

T08620

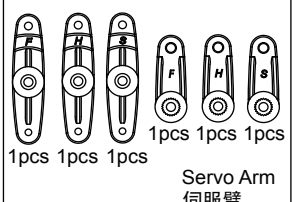

T08621

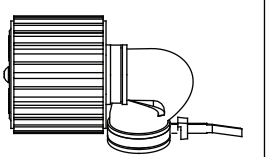

T08622

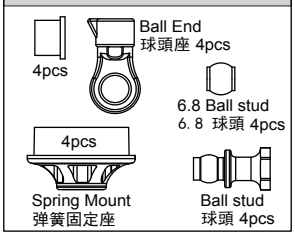

T08623

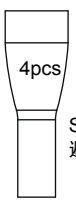

T08625

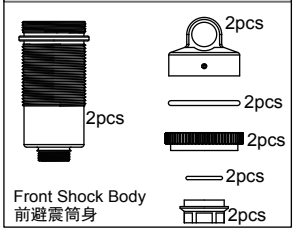

T08626

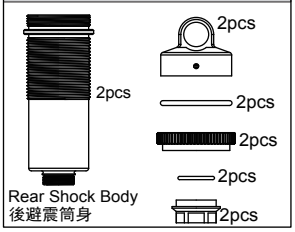

T08627

T08628

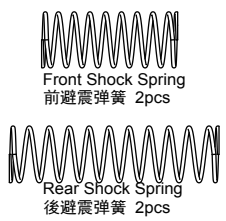

T08631

T08632

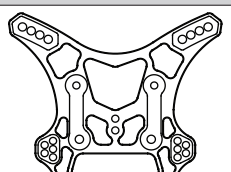

T08634

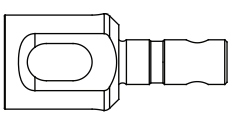

T08635

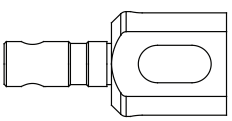

Parts list for T8 V3 off-road buggy - 2　T8 V3越野車配件包-2

T08629

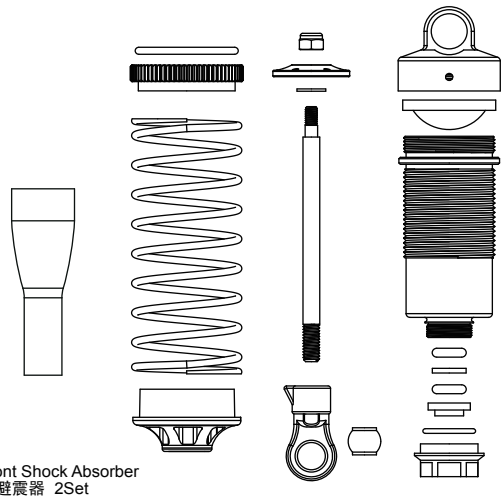

Front Shock Absorber
前避震器 2Set

T08630

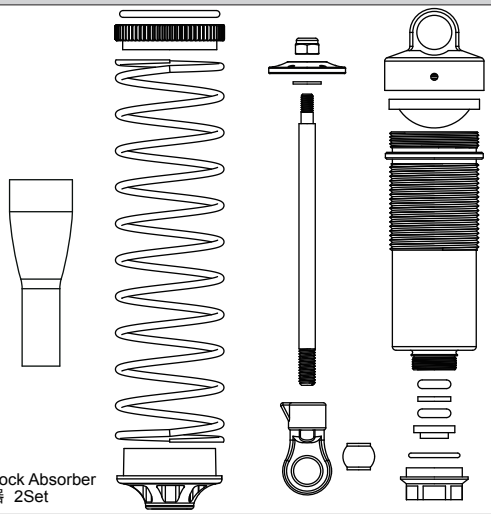

Rear Shock Absorber
後避震器 2Set

T08637

2.5x16.8 Pin
2. 5x16. 8銷子
4pcs

T08638

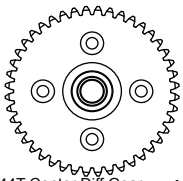

44T Center Diff Gear
44T 中差速齒輪 1pcs

O-ring
O環 1pcs

4pcs
M3x12 Screw
M3x12 螺絲

T08633

20T Diff Gear
20T差速齒輪 2pcs

Diff Shaft
差速軸 2pcs

2pcs
2.5x11.5 Pin
2. 5x11. 5鋼針

10T Diff Gear
10T差速齒輪
4pcs

4pcs
4.1x12x0.2 Washer
4. 1x12x0. 2墊片

2pcs
6.1x11x0.2 Washer
6. 1x11x0. 2墊片

T08636

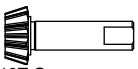

10T Gear
10T 齒輪 1pcs

O-ring
O環 1pcs

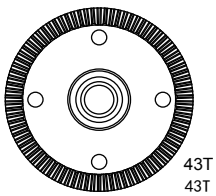

43T Front/Rear Diff Gear
43T 前/後差速伞齒1pcs

M3x12 Screw
M3x12 螺絲 4pcs

T08639

M4x4 Screw
M4x4 螺絲 2pcs

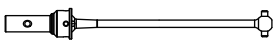

95.5mm Front CVD
95. 5mm前CVD 2pcs

T08640

M4x4 Screw
M4x4 螺絲 2pcs

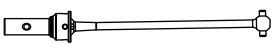

94mm Rear CVD
94mm後CVD 2pcs

T08641

M5x4 Screw
M5x4 螺絲 1pcs

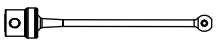

84mm Center Front CVD
84mm中前CVD 1pcs

T08642

M5x4 Screw
M5x4 螺絲 1pcs

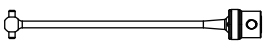

110mm Center Rear CVD
110mm中後CVD 1pcs

T08643

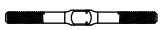

3x40 1pcs

4x53 2pcs

5x40 2pcs

Turnbuckle Set
拉桿組
5x58 2pcs

T08645

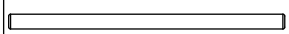

4x73 Arm Shaft
4x73 擺臂軸 2pcs

T08647

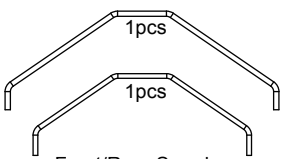

1pcs
1pcs
Front/Rear Swaybar
前後防傾桿

T08648

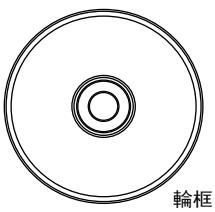

Rim
輪框 2pcs

T08649

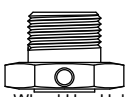

Wheel Hex Hub
六角輪座 4pcs

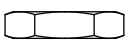

17mm Hex Nut
17mm 六角螺帽 4pcs

2.5x16.8 Pin
2. 5x16. 8銷子
4pcs

T08650

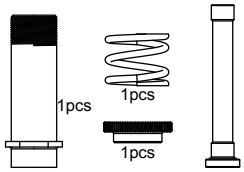

1pcs
1pcs
1pcs
2pcs
Servo Saver Set
緩冲組

T08651

Buffer Screw
緩冲螺絲 2pcs

Steering Rack
轉向緩冲轉接板
1pcs

T08652

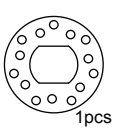

1pcs

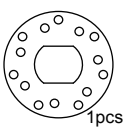

1pcs

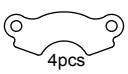

4pcs
Brake Disk
剎車盤

T08653

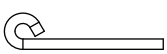

2pcs

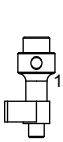

1pcs

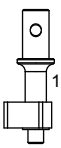

1pcs

2pcs
Brake Shaft
剎車軸

T08654

Pipe Mount
排氣管固定座 1pcs

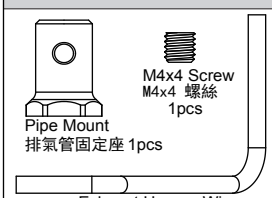

M4x4 Screw
M4x4 螺絲
1pcs
Exhaust Hanger Wire
排氣管固定桿 1pcs

T08655

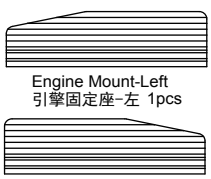

Engine Mount-Left
引擎固定座-左 1pcs
Engine Mount-Right
引擎固定座-右 1pcs

M4x10
4pcs

T08656

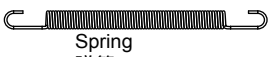

Spring
彈簧 1pcs

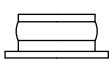

Seal Enclose
密封圈 1pcs

T08657

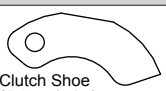

Clutch Shoe
離合器磨擦片 3pcs

Clutch Spring
離合器彈簧 3pcs

T08660

Small Clip
小號固定夾 8pcs

Mid Clip
中號固定夾 8pcs

T08661

5x11x4 Ball Bearing
5x11x4 軸承
6pcs

T08662

6x10x3 Ball Bearing
6x10x3 軸承
6pcs

T08663

6x13x5 Ball Bearing
6x13x5 軸承
6pcs

Parts list for T8 V3 off-road buggy - 3　T8 V3越野车配件包-3

T08664

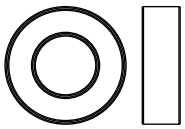

8x16x5 Ball Bearing
8x16x5 軸承
6pcs

T08665

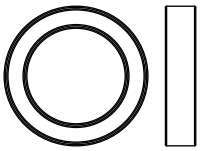

13x19x4 Ball Bearing
13x19x4 軸承
6pcs

T08667

2.7x5.8x0.5 Washer
2. 7x5. 8x0. 5 墊片
6pcs

T08666

M2.5 Nylon Nut
M2. 5 尼龍螺母 6pcs

M3.5 Nylon Nut
M3. 5 尼龍螺母 6pcs

M3 Nylon Nut
M3尼龍螺母 6pcs

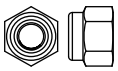

M4 Nylon Nut
M4 尼龍螺母 6pcs

T08668

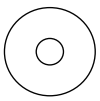

4.1x12x0.2 Washer
4. 1x12x0. 2 墊片 6pcs

T08669

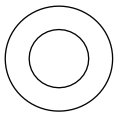

6.1x11x0.2 Washer
6. 1x11x0. 2墊片 12pcs

T08670

3.5x9x1.0 Washer
3. 5x9x1. 0 墊片 6pcs

T08671

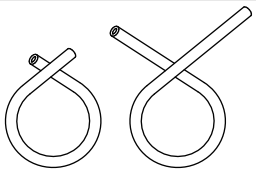

Oil Pipe-Short
油管-短 1pcs

Oil Pipe-Long
油管-长 1pcs

T08675

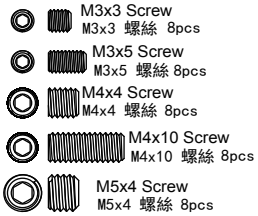

M3x3 Screw
M3x3 螺絲 8pcs

M3x5 Screw
M3x5 螺絲 8pcs

M4x4 Screw
M4x4 螺絲 8pcs

M4x10 Screw
M4x10 螺絲 8pcs

M5x4 Screw
M5x4 螺絲 8pcs

T08673

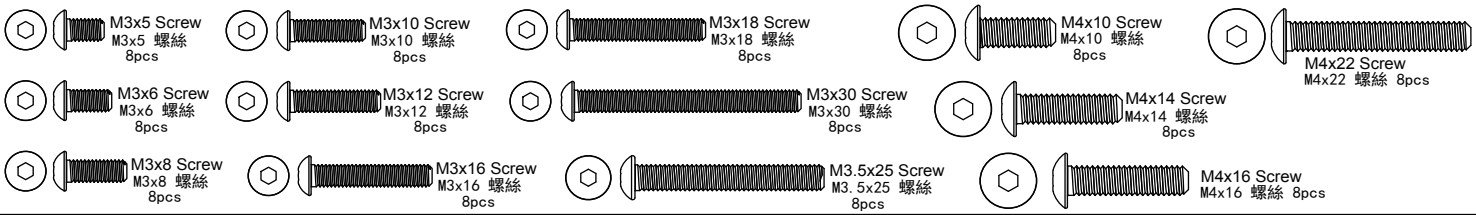

M3x5 Screw
M3x5 螺絲
8pcs

M3x10 Screw
M3x10 螺絲
8pcs

M3x18 Screw
M3x18 螺絲
8pcs

M4x10 Screw
M4x10 螺絲
8pcs

M4x22 Screw
M4x22 螺絲 8pcs

M3x6 Screw
M3x6 螺絲
8pcs

M3x12 Screw
M3x12 螺絲
8pcs

M3x30 Screw
M3x30 螺絲
8pcs

M4x14 Screw
M4x14 螺絲
8pcs

M3x8 Screw
M3x8 螺絲
8pcs

M3x16 Screw
M3x16 螺絲
8pcs

M3.5x25 Screw
M3. 5x25 螺絲
8pcs

M4x16 Screw
M4x16 螺絲 8pcs

T08674

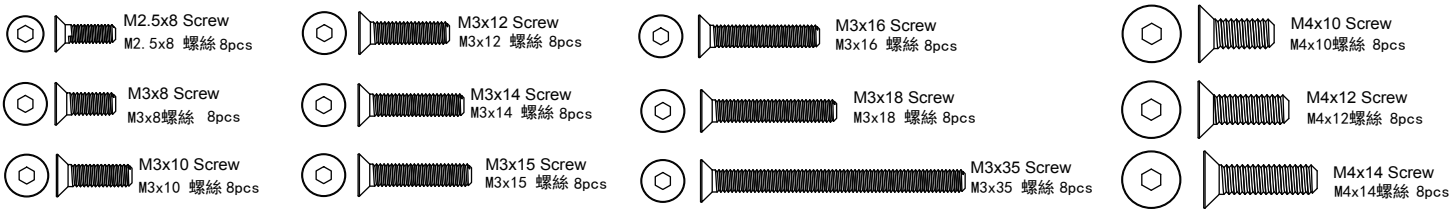

M2.5x8 Screw
M2. 5x8 螺絲 8pcs

M3x12 Screw
M3x12 螺絲 8pcs

M3x16 Screw
M3x16 螺絲 8pcs

M4x10 Screw
M4x10螺絲 8pcs

M3x8 Screw
M3x8螺絲 8pcs

M3x14 Screw
M3x14 螺絲 8pcs

M3x18 Screw
M3x18 螺絲 8pcs

M4x12 Screw
M4x12螺絲 8pcs

M3x10 Screw
M3x10 螺絲 8pcs

M3x15 Screw
M3x15 螺絲 8pcs

M3x35 Screw
M3x35 螺絲 8pcs

M4x14 Screw
M4x14螺絲 8pcs

T08676

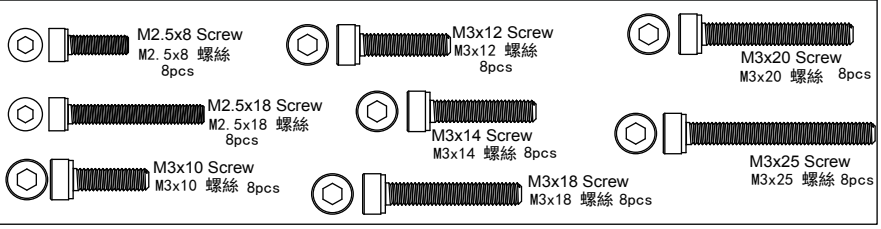

M2.5x8 Screw
M2. 5x8 螺絲
8pcs

M3x12 Screw
M3x12 螺絲
8pcs

M3x20 Screw
M3x20 螺絲 8pcs

M2.5x18 Screw
M2. 5x18 螺絲
8pcs

M3x14 Screw
M3x14 螺絲 8pcs

M3x25 Screw
M3x25 螺絲 8pcs

M3x10 Screw
M3x10 螺絲 8pcs

M3x18 Screw
M3x18 螺絲 8pcs

T08677

5x8x2.5 Ball bearing
5x8x2. 5軸承
6pcs

T08678

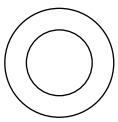

5.8x1.9 Diff O-ring
5. 8x1. 8差速O環
6pcs

T08679

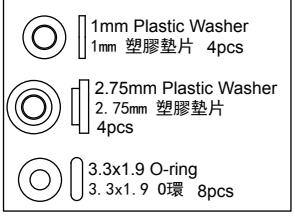

1mm Plastic Washer
1mm 塑膠墊片 4pcs

2.75mm Plastic Washer
2. 75mm 塑膠墊片
4pcs

3.3x1.9 O-ring
3. 3x1. 9 O環 8pcs

511123

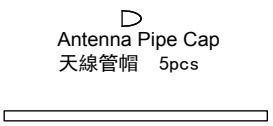

Antenna Pipe Cap
天線管帽 5pcs

Antenna Pipe
天線管 5pcs

T08102

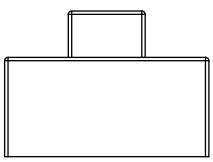

Switch cover
開關蓋

86000

5.1x8x0.2 Washer
5. 1x8x0. 2墊片
6pcs

T08304

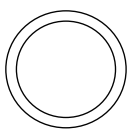

13.1x15.9x0.2 Washer
13. 1x15. 9x0. 2 墊片 6pcs

T02081

3x7x0.8 Washer
3x7x0. 8 墊片 10pcs

81005

M3 Spring Washer
M3弹簧墊片 6pcs

T08750

Buffer Screw
緩沖螺絲
2pcs

3x7x0.8 Washer
3x7x0. 8 墊片
2pcs

T08751

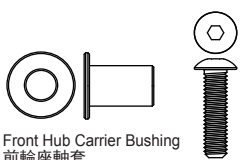

Front Hub Carrier Bushing
前輪座軸套
4pcs

M4x16
4pcs

T08752

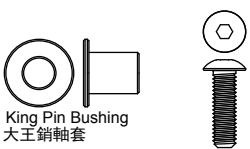

King Pin Bushing
大王銷軸套
4pcs

M4x14
4pcs

Parts list for T8 V3 off-road buggy - 4　T8 V3越野車配件包-4

T08753

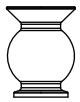

6.8 Ball Stud-Steering
6. 8球頭-轉向
6pcs

T08754

6.8 Ball Stud-Steering
6. 8球頭-轉向
6pcs

T08755

6.8 Ball Stud-Swaybar/Shock
6. 8球頭-防傾桿/避震器
6pcs

T08756

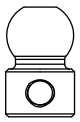

M3x3
6pcs

6.8 Ball Stud-Swaybar
6. 8球頭-防傾桿
6pcs

T08757

7.8 Ball Stud-Front/Rear Upper
7. 8球頭-前/後上
6pcs

T08758

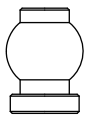

7.8 Ball Stud-Front/Rear Upper
7. 8球頭-前/後上
6pcs

T08759

5.8 Ball Stud-Steering Servo
5. 8球頭-轉向伺服
6pcs

T08760

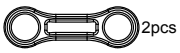

2pcs
6.8 Ball End-Swaybar
6. 8 球頭座-防傾桿

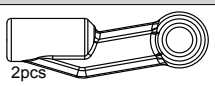

2pcs
7.8 Ball End-Rear Upper
7. 8 球頭座-後上

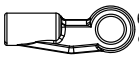

2pcs
6.8 Ball End-Steering
6. 8 球頭座-轉向

1pcs
5.8 Ball End-Steering Servo
5. 8 球頭座-轉向伺服

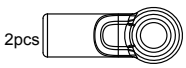

2pcs
7.8 Ball End-Front Upper
7. 8 球頭座-前上

T08762

1pcs
Rear Chassis Stiffener Mount
後支撐桿固定座

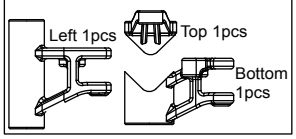

Left 1pcs
Top 1pcs
Bottom
1pcs

T08768

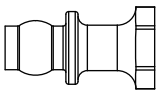

Shock Top Ball stud
避震上球頭
4pcs

T08769

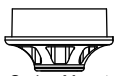

Spring Mount
彈簧固定座
4pcs

Ball End
球頭座
4pcs

Shock Top Mount
避震上固定座　4pcs

T08770

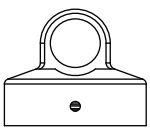

Shock Absorber Top cover
避震器上蓋　4pcs

T08771

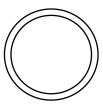

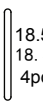

18.5x1.5 O-ring
18. 5x1. 5 O環
4pcs

9x1.0 O-ring
9x1. 0 O環
4pcs

T08772

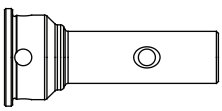

CVD Connecting Cup
CVD接杯
2pcs

T08773

5x8.5 Shaft
5x8. 5軸　2pcs

2.5x12.8 Pin
2. 5x12. 8鋼針　2pcs

94mm Drive Shaft
94mm傳动軸　2pcs

T08774

5x8.5 Shaft
5x8. 5軸　2pcs

2.5x12.8 Pin
2. 5x12. 8鋼針　2pcs

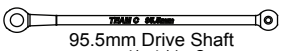

95.5mm Drive Shaft
95. 5mm傳动軸　2pcs

T08775

3x40 Turnbuckle
3x40拉桿
2pcs

T08776

4x53 Turnbuckle
4x53拉桿
2pcs

T08777

5x40 Turnbuckle
5x40拉桿
2pcs

T08778

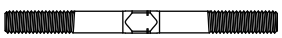

5x58 Turnbuckle
5x58拉桿
2pcs

T08779

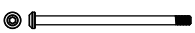

3x51.5 Arm Shaft
3x51. 5擺臂軸
2pcs

T08781

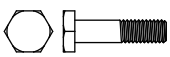

Brake Screw
剎車螺絲
4pcs

Brake Pad Spring
剎車夾片弹簧　4pcs

T08782

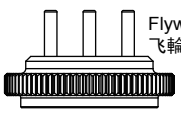

Flywheel
飞輪 1pcs

Flywheel Collet
飞輪锥套 1pcs

T08783

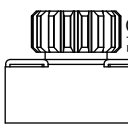

Clutch Gear 16T
离合器齿輪16T
1pcs

5x11x4 Ball Bearing
5x11x4軸承
2pcs

T08784

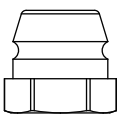

Engine Nut
引擎螺帽
1pcs

T08785

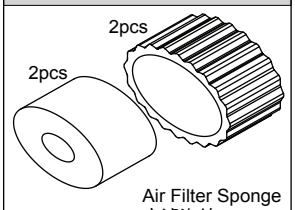

2pcs
2pcs

Air Filter Sponge
空濾海綿

T08937

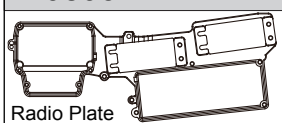

Radio Plate
二楼板　1pcs

Receiver Cover
接收機蓋
1pcs

Switch Cover
開關固定座 1pcs

Battery Cover
電池蓋 1pcs

Transponder Mount
感應器架 1pcs

T08938

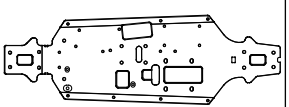

Chassis
底盤　1pcs

T08939

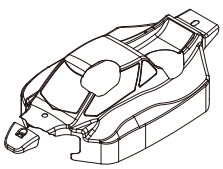

Body-Lexan
車殼-PC 1pcs

T08940

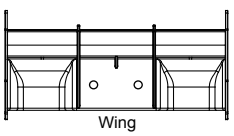

Wing
尾翼 1pcs

Wing Screw Washer
尾翼螺絲墊片　2pcs

T08941

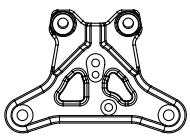

Bufer Plate-Plastic
緩沖頂板-塑膠
1pcs

T08942

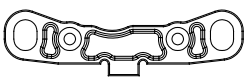

Arm Mount Rear-F
擺臂固定座後-F
1pcs

T08943

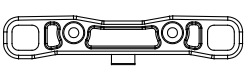

Arm Mount Rear-R
擺臂固定座後-R
1pcs

Parts list for T8 V3 off-road buggy - 5　T8 V3越野車配件包-5

T08944

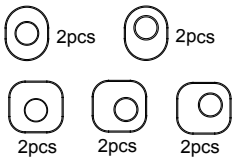

Arm Adjust Set
擺臂調節座組 2pcs

T08945

4x71 Arm Shaft
4x71擺臂軸
2pcs

T08946

M2.5x8 Screw
M2.5x8螺絲 8pcs

M2.5x10 Screw
M2.5x10螺絲
8pcs

TU0839

1pcs

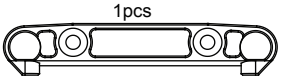

Front Arm Mount-Rear
前擺臂固定座-後

TU0880

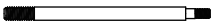

Front Shock Shaft-Titan Coated
前避震軸-鍍鈦 2pcs

TU0882

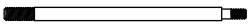

Rear Shock Shaft-Titan Coated
後避震軸-鍍鈦 2pcs

T08763

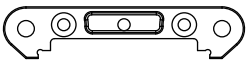

Arm Mount Front-F
擺臂固定座前-F
1pcs

TU0801 OP

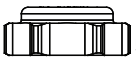

Nut
螺母 2pcs

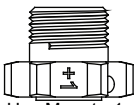

Pin
鋼針
2pcs

Hex Mount +1
六角座+1 2pcs

TU0802 OP

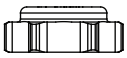

Nut
螺母 2pcs

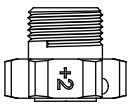

Pin
鋼針
2pcs

Hex Mount +2
六角座+2 2pcs

TU0808 OP

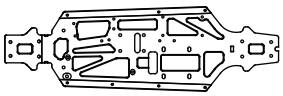

3mm Light Weight Chassis
3mm輕量化底盤
1pcs

T08786	M2.5 Nylon Nut M2. 5 尼龍螺母	6pcs
T08787	M3.5 Nylon Nut M3. 5 尼龍螺母	6pcs
T08788	M3x5 Button Head Hex Screw M3x5半圓頭內六角螺絲	8pcs
T08789	M3x6 Button Head Hex Screw M3x6半圓頭內六角螺絲	8pcs
T08790	M3x8 Button Head Hex Screw M3x8半圓頭內六角螺絲	8pcs
T08791	M3x10 Button Head Hex Screw M3x10半圓頭內六角螺絲	8pcs
T08792	M3x12 Button Head Hex Screw M3x12半圓頭內六角螺絲	8pcs
T08793	M3x15 Button Head Hex Screw M3x15半圓頭內六角螺絲	8pcs
T08794	M3x16 Button Head Hex Screw M3x16半圓頭內六角螺絲	8pcs
T08795	M3x18 Button Head Hex Screw M3x18半圓頭內六角螺絲	8pcs
T08796	M3x30 Button Head Hex Screw M3x30半圓頭內六角螺絲	8pcs
T08797	M3.5x25 Button Head Hex Screw M3. 5x25半圓頭內六角螺絲	8pcs
T08798	M4x10 Button Head Hex Screw M4x10半圓頭內六角螺絲	8pcs
T08799	M4x14 Button Head Hex Screw M4x14半圓頭內六角螺絲	8pcs
T08800	M4x16 Button Head Hex Screw M4x16半圓頭內六角螺絲	8pcs
T08801	M4x22 Button Head Hex Screw M4x22半圓頭內六角螺絲	8pcs
T08802	M2.5x8 Flat Head Hex Screw M2. 5x8平頭內六角螺絲	8pcs
T08803	M3x8 Flat Head Hex Screw M3x8平頭內六角螺絲	8pcs
T08804	M3x10 Flat Head Hex Screw M3x10平頭內六角螺絲	8pcs
T08805	M3x12 Flat Head Hex Screw M3x12平頭內六角螺絲	8pcs
T08806	M3x14 Flat Head Hex Screw M3x14平頭內六角螺絲	8pcs
T08807	M3x15 Flat Head Hex Screw M3x15平頭內六角螺絲	8pcs
T08808	M3x16 Flat Head Hex Screw M3x16平頭內六角螺絲	8pcs

T08809	M3x18 Flat Head Hex Screw M3x18平頭內六角螺絲	8pcs
T08810	M3x35 Flat Head Hex Screw M3x35平頭內六角螺絲	8pcs
T08811	M4x10 Flat Head Hex Screw M4x10平頭內六角螺絲	8pcs
T08812	M4x12 Flat Head Hex Screw M4x12平頭內六角螺絲	8pcs
T08813	M4x14 Flat Head Hex Screw M4x14平頭內六角螺絲	8pcs
T08814	M3x5 Set Screw M3x5機米螺絲	8pcs
T08815	M4x10 Set Screw M4x10機米螺絲	8pcs
T08816	M5x4 Set Screw M5x4機米螺絲	8pcs
T08817	M2.5x8 Cap Head Screw M2. 5x8圓柱頭螺絲	8pcs
T08818	M2.5x18 Cap Head Screw M2. 8x18圓柱頭螺絲	8pcs
T08819	M3x25 Cap Head Screw M3x25圓柱頭螺絲	8pcs
84002	M4x4 Set Screw M4x4機米螺絲	8pcs
83001	M3x12 Cap Head Screw M3x12圓柱頭螺絲	8pcs
T08218	M3x10 Cap Head Screw M3x10圓柱頭螺絲	8pcs
T08219	M3x14 Cap Head Screw M3x14圓柱頭螺絲	8pcs
T08220	M3x18 Cap Head Screw M3x18圓柱頭螺絲	8pcs
T08306	Engine Screw Washer 引擎螺絲墊片	6pcs
511129	Mid Clip 中號固定夾	10pcs
511190	Small Clip 小號固定夾	10pcs
84001	M3x3 Set Screw M3x3機米螺絲	8pcs
87004	M3 Nylon Nut M3尼龍螺母	6pcs
87006	M4 Nylon Nut M4尼龍螺母	6pcs

TU0810 OP

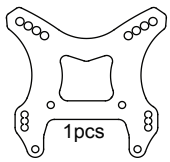

1pcs

Carbon Front Shock Tower
碳纖前避震架

TU0812 OP

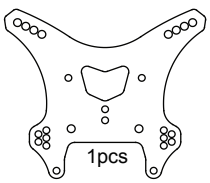

1pcs

Carbon Rear Shock Tower
碳纖後避震架

TU0813 OP

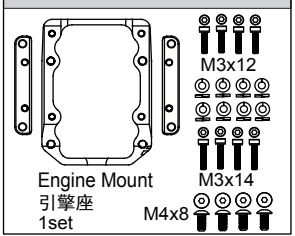

Engine Mount
引擎座
1set

TU0815 OP

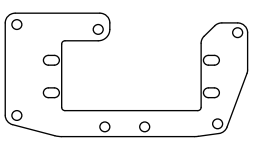

Carbon Radio Plate
碳纖 二樓板

TU0818 OP

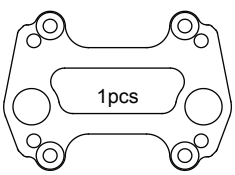

1pcs

Carbon Center Diff Upper Plate
碳纖中差頂板

TU0819 OP

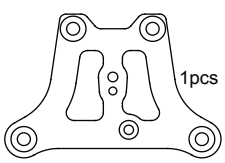

1pcs

Carbon Buffer Plate
碳纖緩冲頂板

TU0820 OP

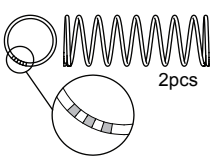

2pcs

Front Shock Spring-Soft
前避震弹簧-軟

TU0822 OP

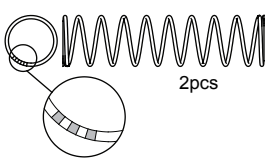

2pcs

Rear Shock Spring-Soft
後避震弹簧-軟

TU0824 OP

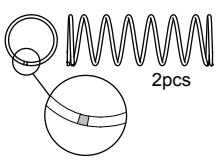

2pcs

Front Shock Spring-Hard
前避震弹簧-硬

Parts list for T8 V3 off-road buggy - 6　T8 V3越野車配件包-6

TU0826 OP

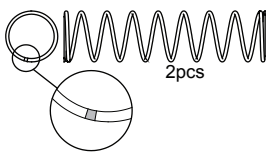

Rear Shock Spring-Hard
後避震彈簧-硬

TU0829 OP

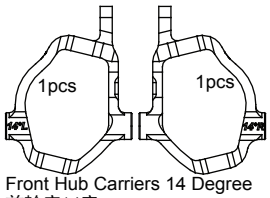

Front Hub Carriers 14 Degree
前輪座14度

TU0830 OP

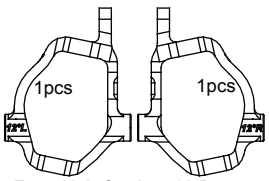

Front Hub Carriers 12 Degree
前輪座12度

TU0831 OP

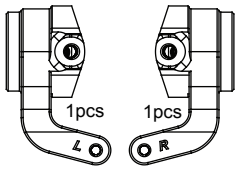

Steering Block
轉向座

TU0833 OP

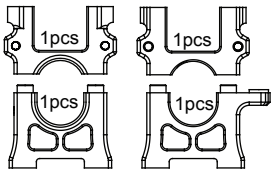

Center Diff Mount
中央差速器固定座

TU0835 OP

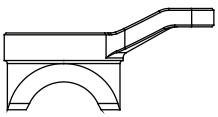

Servo Saver
緩冲座
1pcs

TU0836 OP

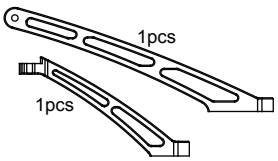

Chassis Stiffener F/R
前/後支撐桿

TU0842 OP

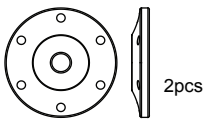

Piston 1.2x6-Black
活塞1.2x6-黑色

TU0844 OP

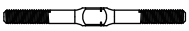

3x40 Titan Turnbuckle
3x40鈦拉桿
1pcs

TU0845 OP

4x52 Titan Turnbuckle
4x52鈦拉桿
2pcs

TU0846 OP

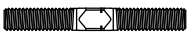

5x40 Titan Turnbuckle
5x40鈦拉桿
2pcs

TU0847 OP

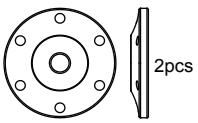

Piston 1.4x6-White
活塞1.4x6-白色

TU0848 OP

5x58 Titan Turnbuckle
5x58鈦拉桿
2pcs

TU0855 OP

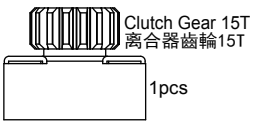

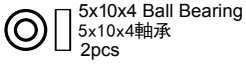

TU0857 OP

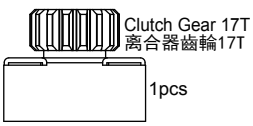

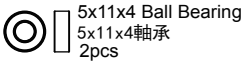

TU0860G OP

TU0861B OP

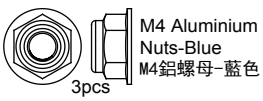

TU0862R OP

TU0866 OP

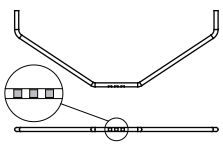

Front Sway Bar 2.3
前防傾桿-2.3　1pcs

TU0867 OP

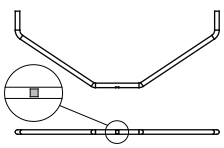

Front Sway Bar 2.6
前防傾桿-2.6　1pcs

TU0868 OP

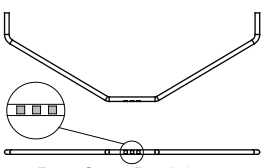

Rear Sway Bar 2.6
後防傾桿-2.6　1pcs

TU0869 OP

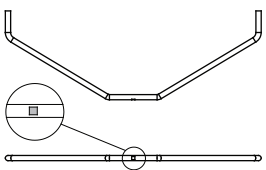

Rear Sway Bar 3.0
後防傾桿-3.0　1pcs

TU0870 OP

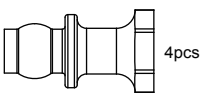

Shock Top Ball stud-Aluminium
避震上球頭-鋁

TU0871 OP

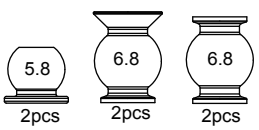

5.8/6.8mm Ball Stud-Aluminium
5.8/6.8球頭-轉向-鋁

TU0872 OP

Front Hub Carriers 12 Degree
前輪座12度

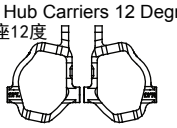

1 set

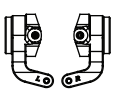

Steering Block
轉向座

TU0874 OP

Front Hub Carriers 14 Degree
前輪座14度

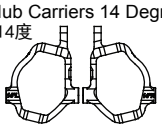

1 set

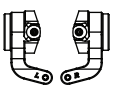

Steering Block
轉向座

TU0875 OP

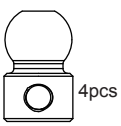

6.8 Swaybar Ball Stud-Aluminium
6.8防傾桿球頭-鋁

TU0876 OP

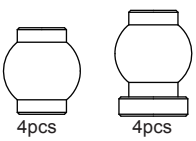

7.8mm Arm Ball Stud-Aluminium
7.8擺臂球頭-鋁

TU0877 OP

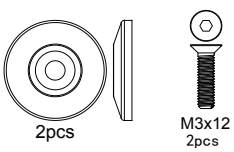

Wing Washer-Aluminium
尾翼墊-鋁

TU0878 OP

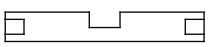

Diff Shaft-Aluminium
差速軸-鋁
6pcs

TU0879 OP

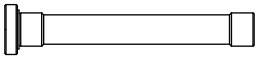

Servo Saver Shaft-Aluminium
緩冲柱-鋁　2pcs

T8 V3

www.teamcracing.net

SETUP SHEET for the TeamC T8 V3

Driver _____

Track / City _____

Event _____ Date ____ / ____ / ____

Track Condition

☐ Smooth ☐ Bumpy ☐ Low traction ☐ Med traction ☐ High traction

☐ Sandy ☐ Soft dirt ☐ Grass ☐ Hard soil ☐ Clay ☐ Wet ☐ Dry ☐ Dusty ☐ Other

Front Suspension

Shock Mounting&Camber link

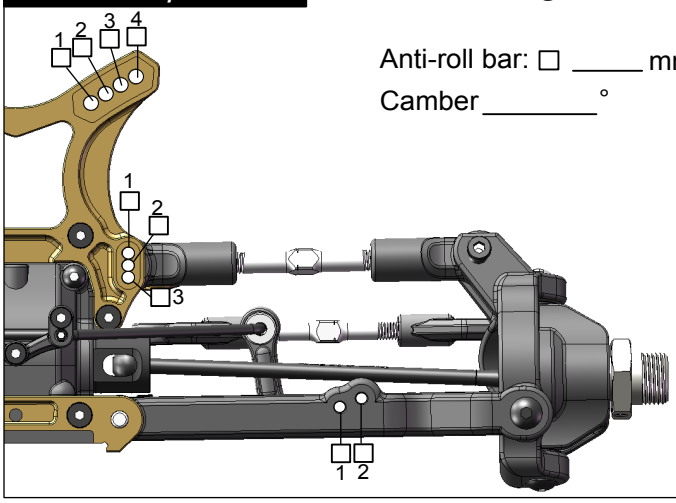

Anti-roll bar: ☐ _____ mm

Camber _____ °

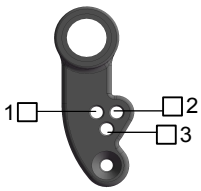

Degree _____ °

Ride height _____ mm

Front Shocks

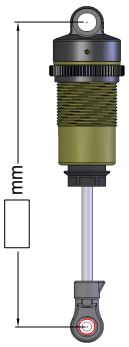

Spring _____

Oil _____ wt

Piston # _____

Rear Suspension

Shock Mounting&Camber link

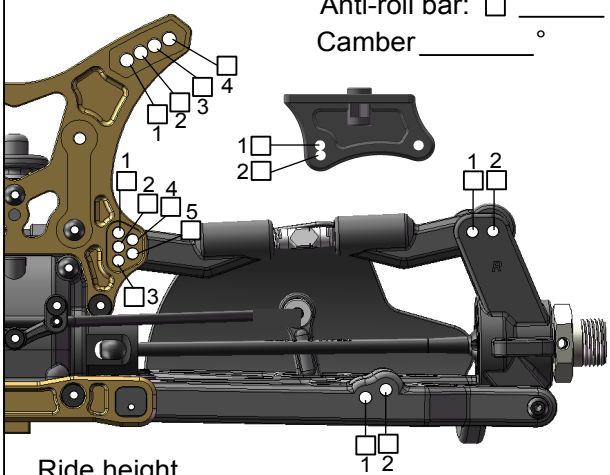

Anti-roll bar: ☐ _____ mm

Camber _____ °

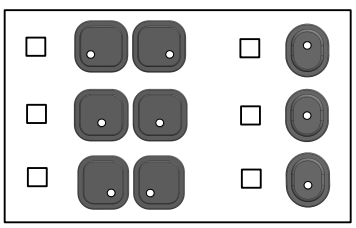

Wheelbase

☐ Long

☐ Medium

☐ Short

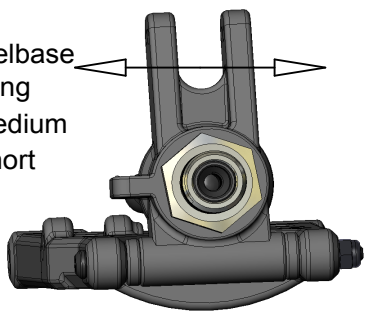

Ride height _____

Rear Shocks

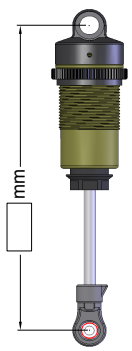

Spring _____

Oil _____ wt

Piston # _____

Tires

Front

Brand _____

Compound _____

Insert _____

Wheel _____

Rear

Brand _____

Compound _____

Insert _____

Wheel _____

Note _____

Diff

Front

Brand _____

Oil wt _____

Center

Brand _____

Oil wt _____

Rear

Brand _____

Oil wt _____

Motor

Engine _____

Glow plug _____

Spur _____

Pinion _____

Fuel _____

Clutch _____

Pipe _____

Note _____

www.teamcracing.net