www.teamcracing.net

# TC10

## Instruction manual

### 1/10 SCALE RADIO CONTROL TOURING CAR

**Dimensions 尺寸：**

Length 長度.....420mm

Width 寬度 .....190mm

Height 高度.....105mm

# Transmitter Preparation
# 調整遙控器

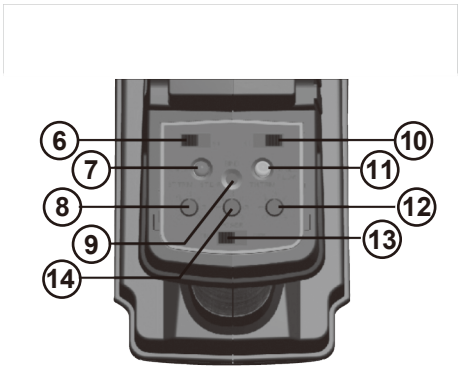

**GLG20**
**2.4GHz**

1 Control Panel 控制面板
2 Steering Wheel 轉向輪
3 Throttle Trigger 油門板扣
4 Battery Compartment 電池盒
5 Charging Jack 充電接口
6 Sterring Servo Reverse 轉向正逆轉開關
7 Power LED 電源指示燈
8 Steering Trim 轉向调節
9 Bind Button 設定按扭
10 Throttle Servo Reverse 油門正逆轉開關
11 Battery Voltage 電池電壓
12 Steering Dual Rate 轉向大小微調
13 Power Switch 電源開關
14 Throttle Trim 油門微調

Transmitter Battery Installation
遙控器電池安裝

Open battery cover at the bottom of transmitter. Install batteries. Follow the direction of batteries designated in the inside of battery box.
在遙控器的底部打開電池蓋子, 安裝電池。
跟隨電池的指示在電池盒裡面指定。

## Transmitter Preparation000
## 調整遙控器

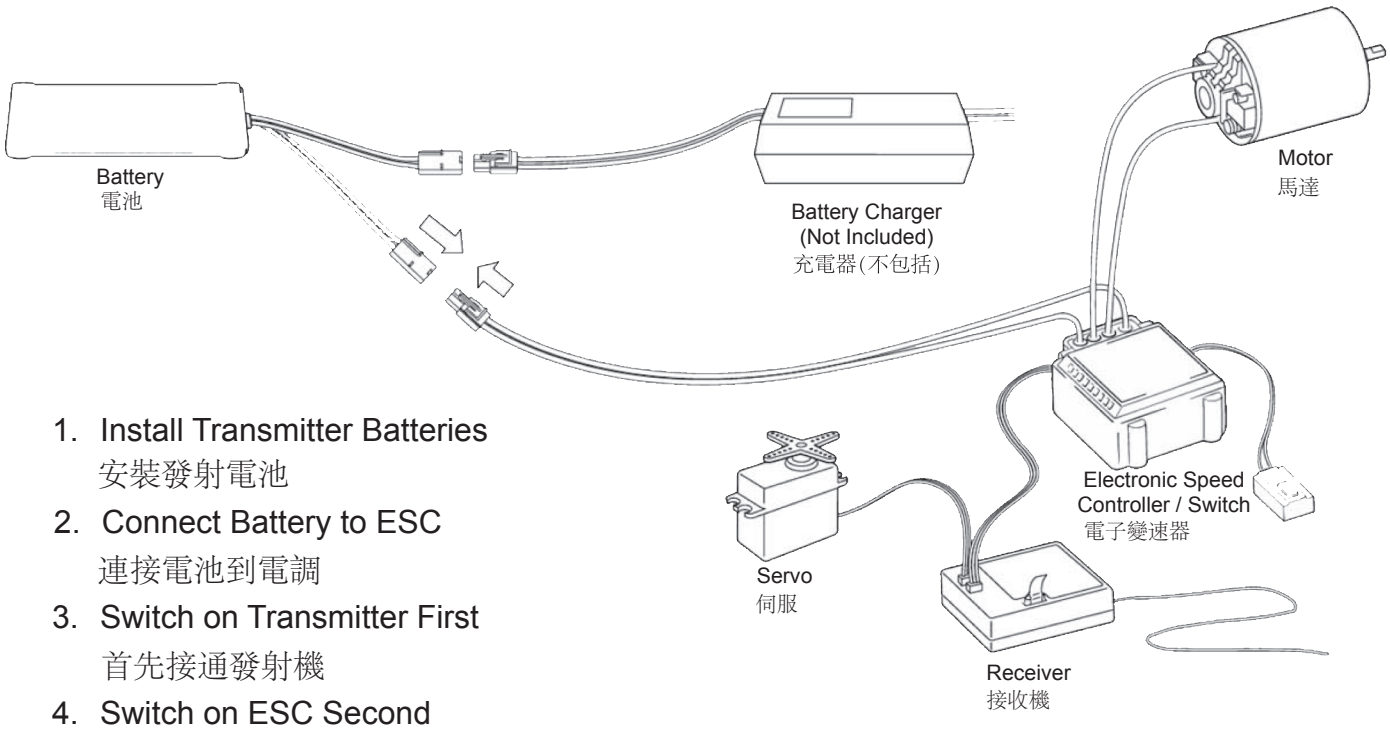


1. Install Transmitter Batteries
   安裝發射電池
2. Connect Battery to ESC
   連接電池到電調
3. Switch on Transmitter First
   首先接通發射機
4. Switch on ESC Second
   其次接通電調

Note: When done driving Turn Off the ESC and THEN Transmitter

注意:當停止駕駛首先要關掉電調
其次再關掉發射機

## Tools required
## 組裝需要的工具

- Needie Nose Pllers
  尖嘴鉗

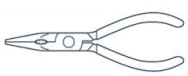

- Awl
  錐

- Grease
  潤滑油

- Screw Cement
  螺絲膠水

- ***H162***
  Instant Glue
  瞬間膠水

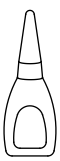

- Differential Grease
  差速油

- Molybdenum Grease(Black)
  鉬油(黑)

- ***H154***
  Body Reamer
  車殼絞刀

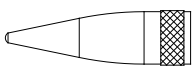

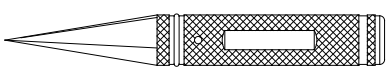

No need to pre-drill precise holes
(1mm to 15mm)can be drilled
可以對預鑽的孔準確地鑽1mm-15mm

- Wire Cutters
  鋼絲鉗

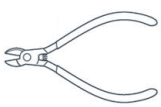

- ***H096***
  ROUND CUTTER
  剪刀

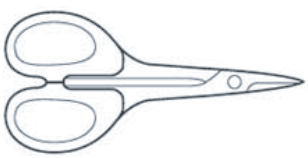

For trimming bodies!
用于修剪車殼!

- Hex Wrench
  六角扳手

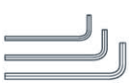

- Hex Wrench
  十字套筒

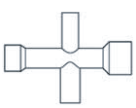

- Sharp Hobby knife
  美工刀

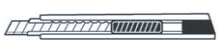

## Gear Differential 齿轮差速 Bag-A

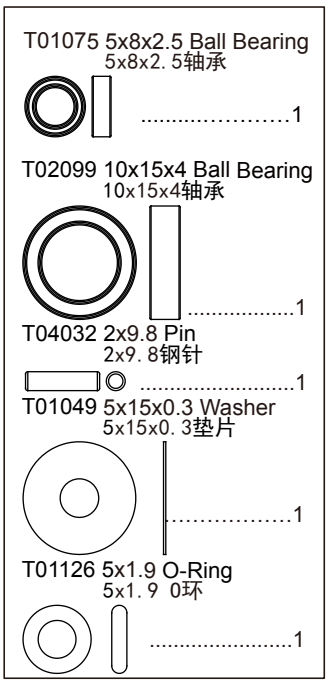


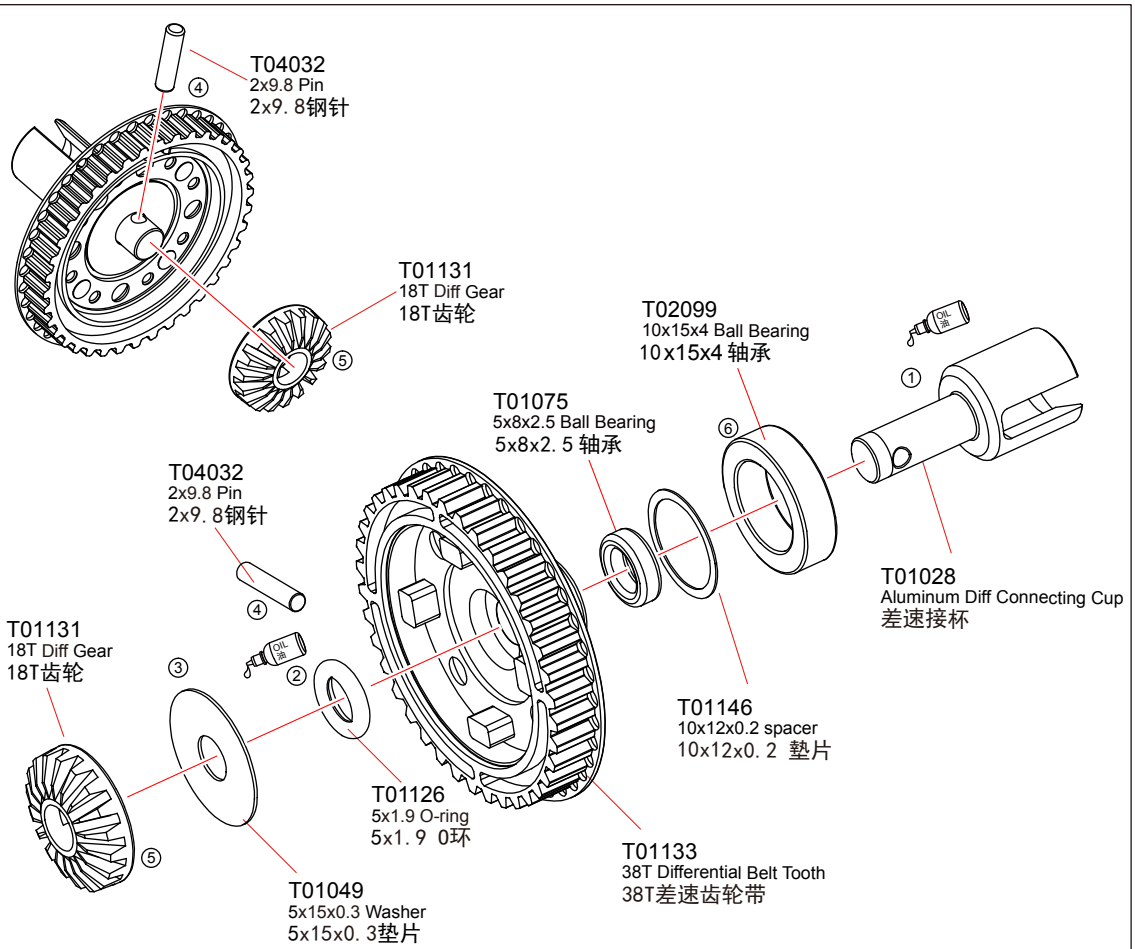


## 2 Gear Differential 齿轮差速 Bag-A

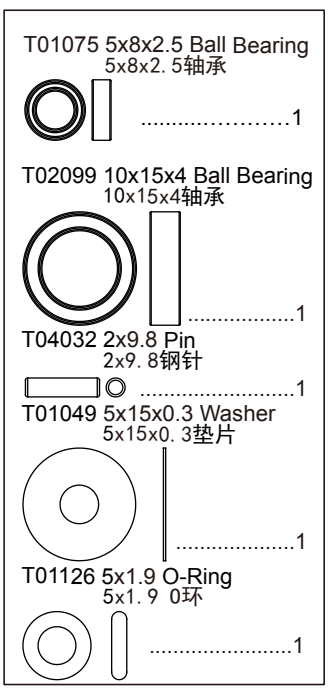


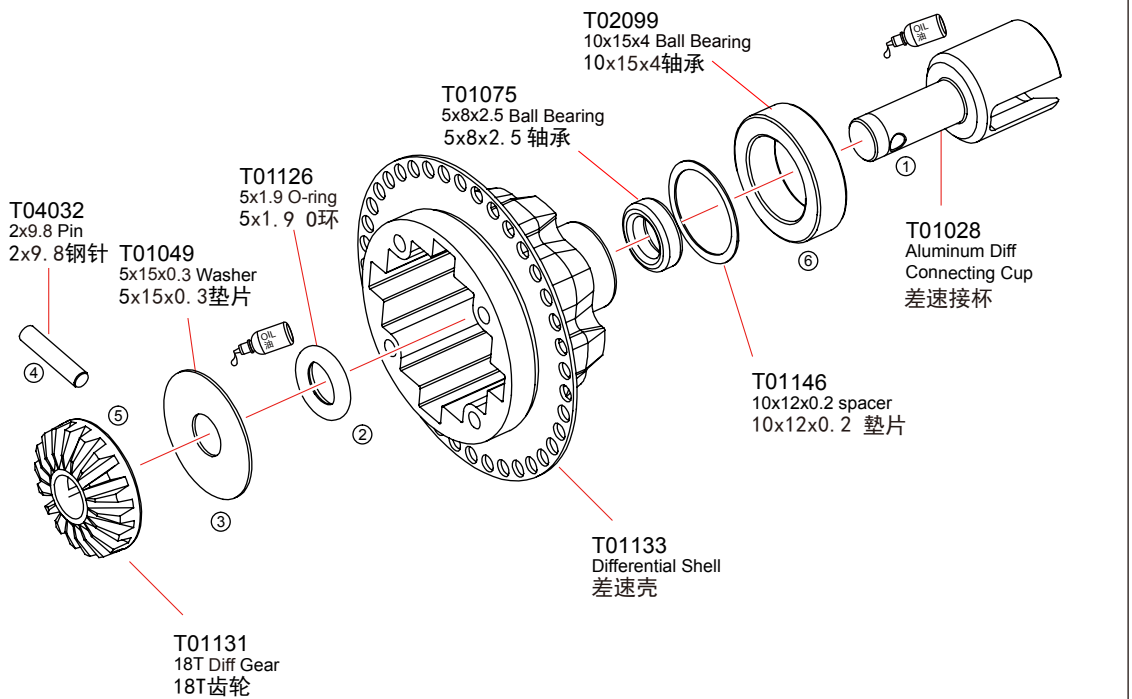

## 3 Gear Differential 齿轮差速 Bag-A

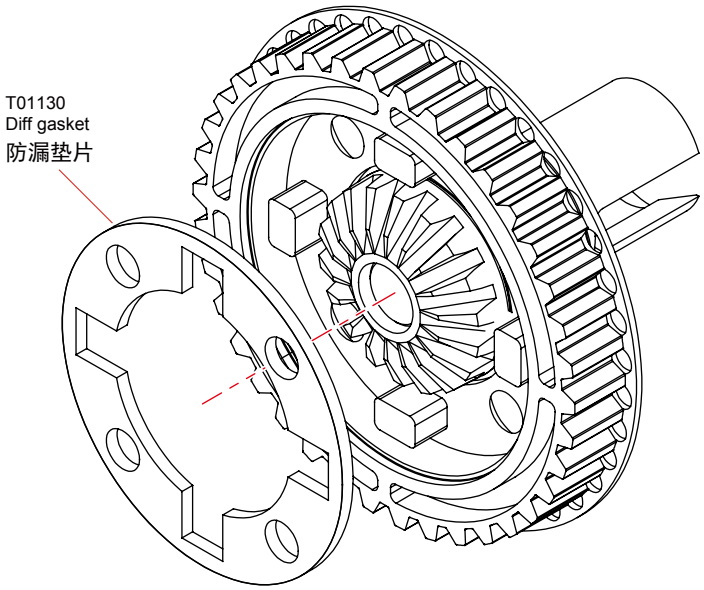


## 4 Gear Differential 齿轮差速 Bag-A

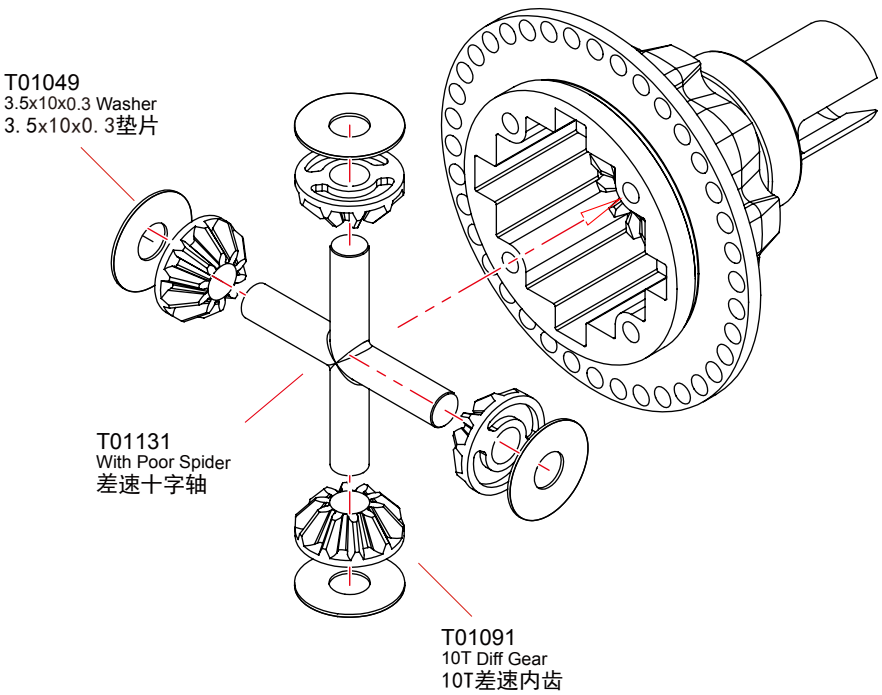


T01049 3.5x10x0.3 Washer
3. 5x10x0. 3垫片

.....4

## 5 Gear Differential 齿轮差速 Bag-A

T01117 M2.5x8 Screw
M2.5x8螺丝
.....4

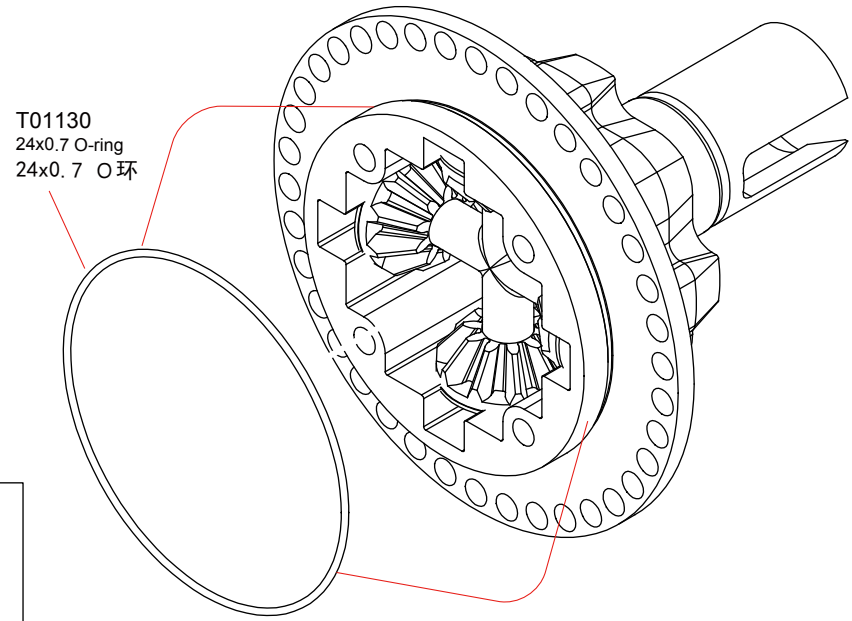


T01130 24x0.7 O-Ring
24x0.7 O环

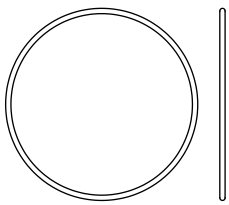

.....1

## 6 Gear Differential 齿轮差速 Bag-A

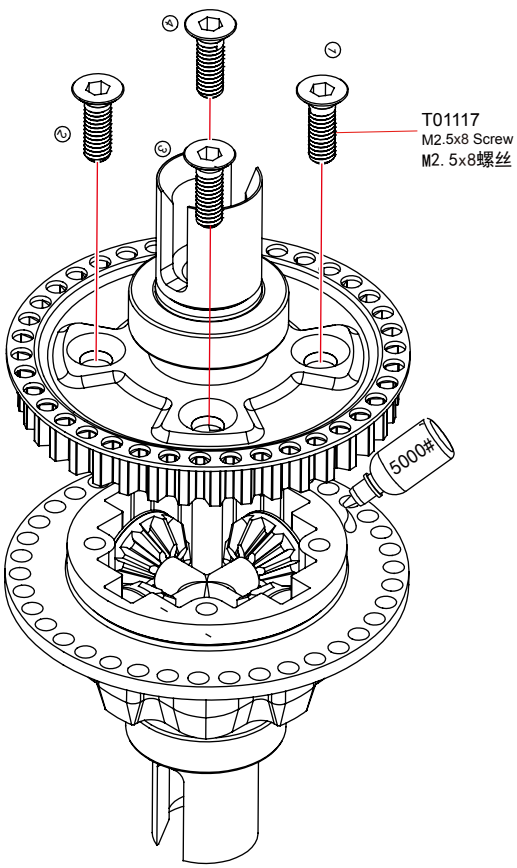


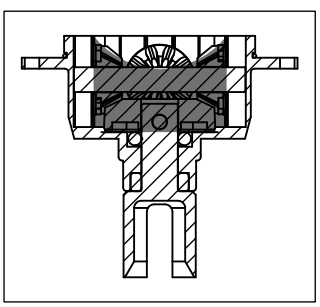

## 7 Solid Axle 直轴 Bag-A

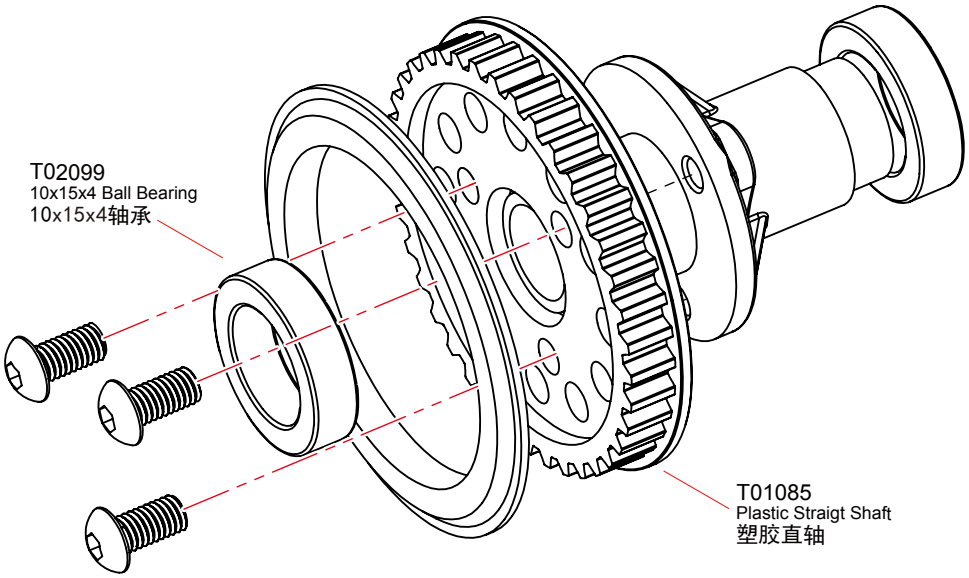


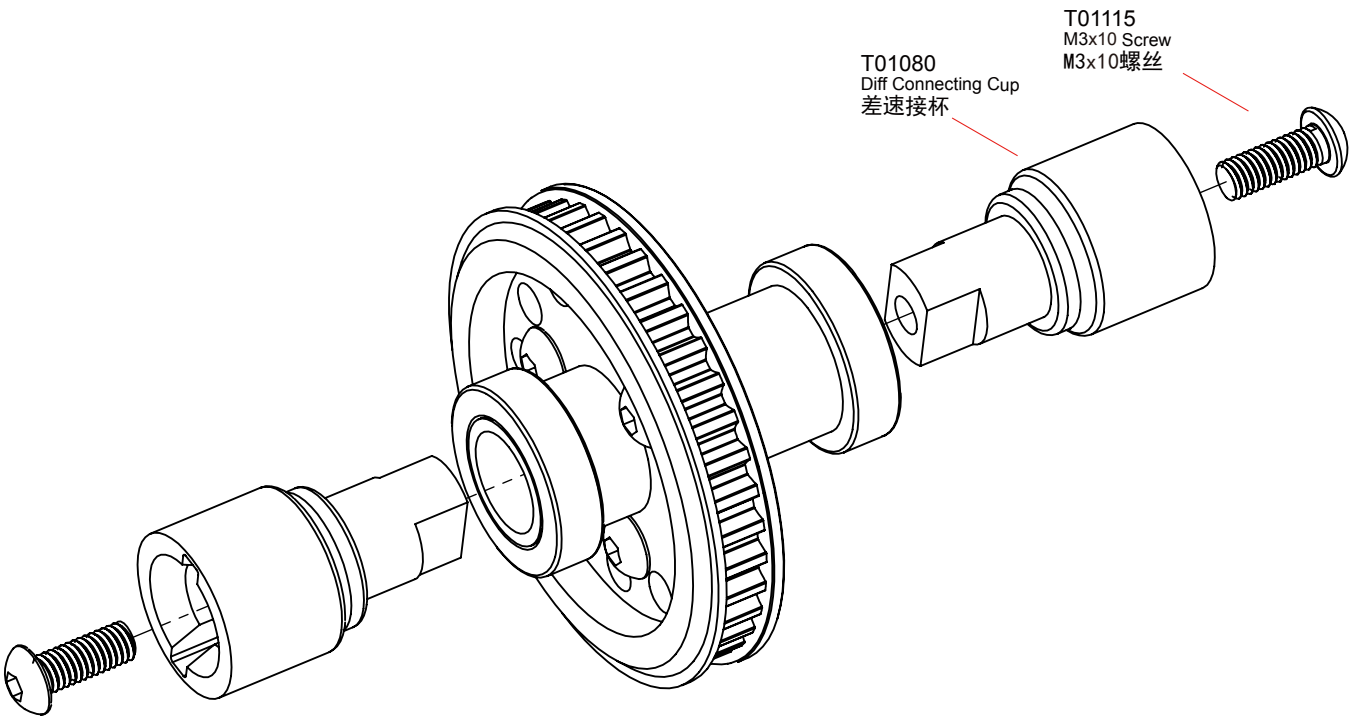


T01115 M3x10 Screw
M3x10螺丝

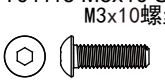

.....2

T02099 10x15x4 Ball Bearing
10x15x4轴承

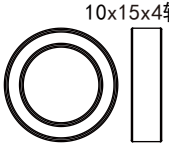

.....2

## 8 Motor Mount/Side Panel 马达座/侧板

**Bag-B**

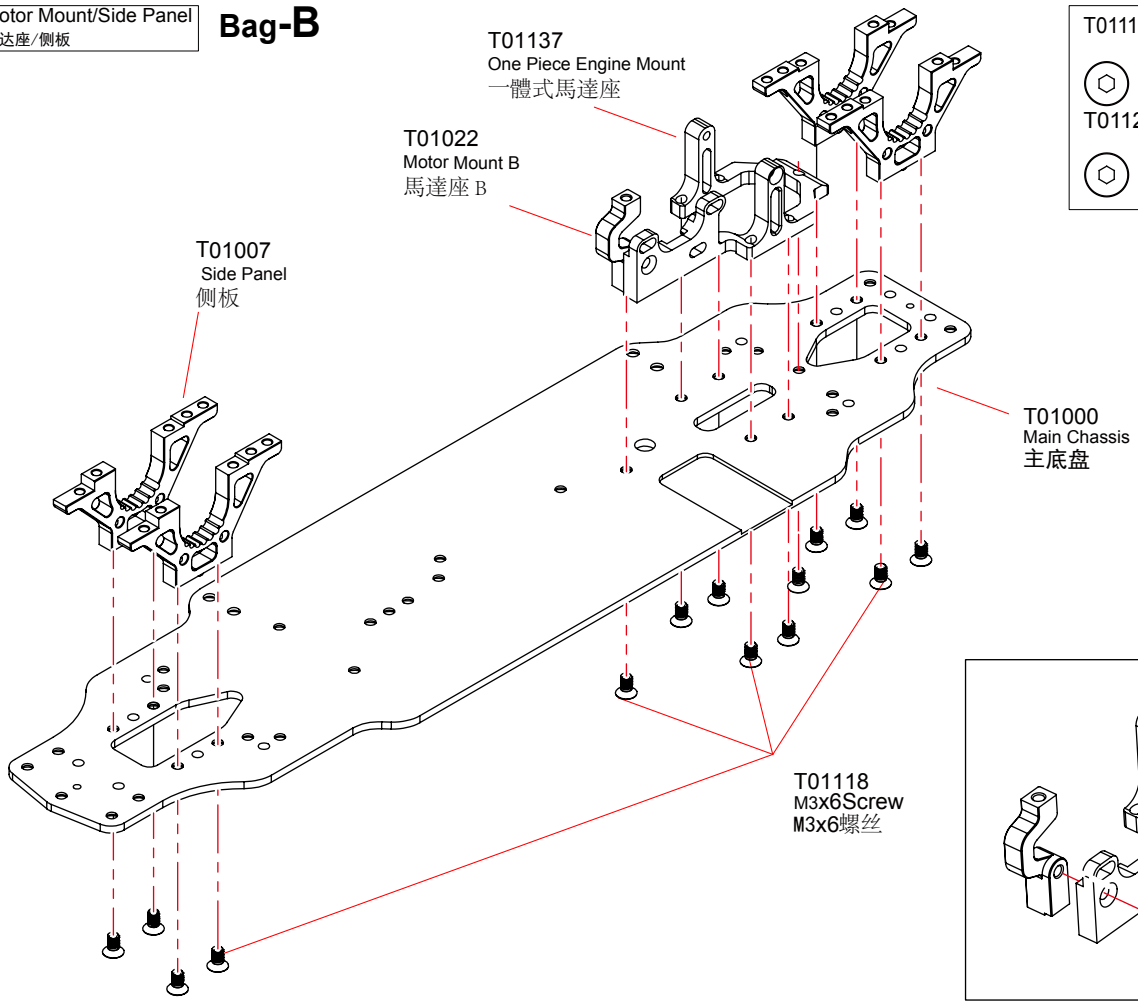


T01118 M3x6 Screw
M3x6螺絲 .....14

T01120 M3x10 Screw
M3x10螺丝 .....1

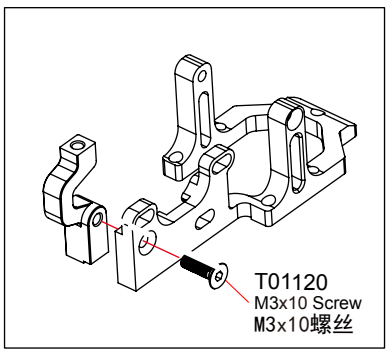


## 9 Center Gear Adaptor 中心齿轮适配器

**Bag-B**

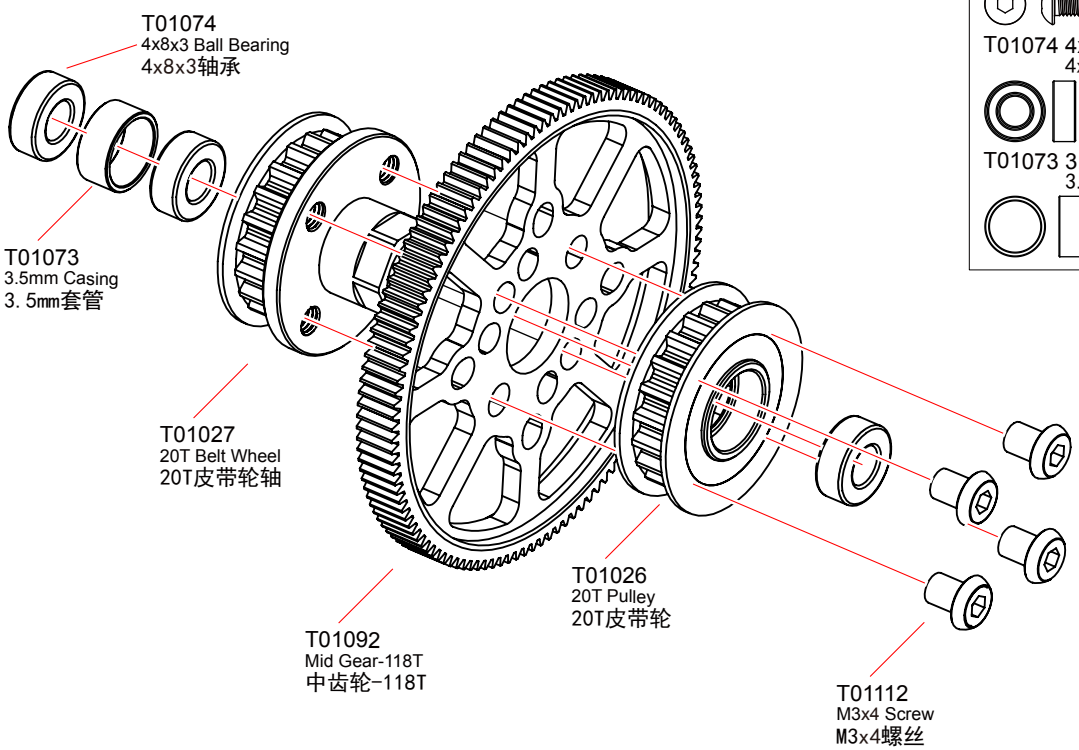


T01112 M3x4 Screw
M3x4螺絲 .....4

T01074 4x8x3 Ball Bearing
4x8x3轴承 .....3

T01073 3.5mm Casing
3. 5mm套管 .....1

## 10 Differential assembly 差速组装

## Bag-B

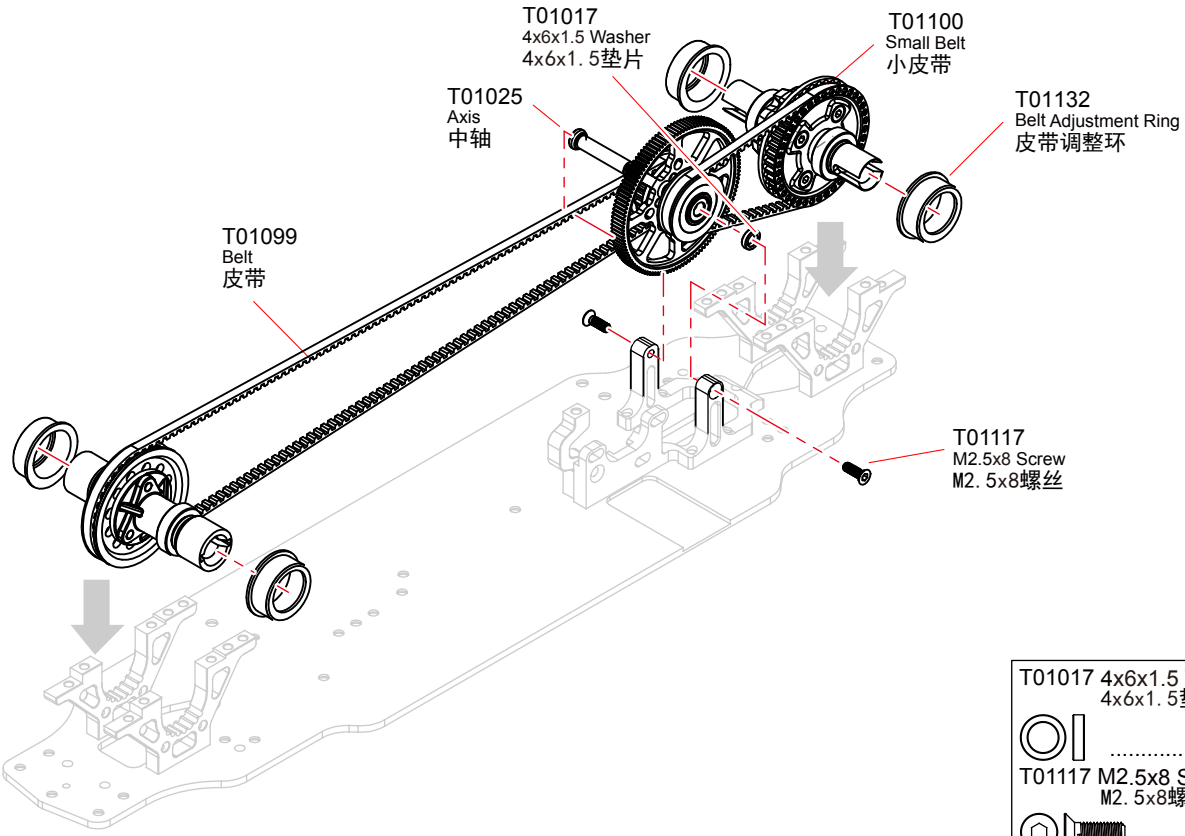


T01017 4x6x1.5 Washer
4x6x1. 5垫片 .....1

T01117 M2.5x8 Screw
M2. 5x8螺丝 .....2

## 11 Differential assembly 差速组装

## Bag-B

Front diff upper position provides more steering but provides less front traction.Recommended for medium-high grip tracks and technical tracks.
上层位置提供更多前差速转向但提供更少的前牵引。推荐用於中-高抓地赛道中控制。

Front diff low position provides more front traction but makes the car more push on power.Recommended for low traction track.
提供更低的位置前面差速前牵引但使汽车更多的推动力量。推荐用於低抓地赛道。

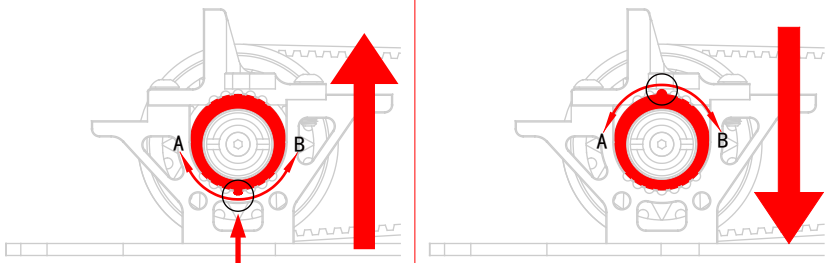


TO LOOSEN FRONT BELT: Rotate both front nylon hubs in arrow direction A
TO TIGHTEN FRONT BELT: Rotate both front nylon hubs in arrow direction B

INITIAL POSITION
PLACE TAB IN THIS BOTTOM NOTCH

Rear diff upper position provides more on-power steering but makes the rear slightly more loose.Recommended for medium-high traction tracks.
上层位置提供更多后方差速权力转向但让后方略微宽松的。推荐用於中-高抓地赛道。

Rear diff lower position provides more rear traction,mainly on power traction and makes the car more stable in the chicanes, but makes the car push more on power.Recommended for low-medium traction.
提供更低的位置前面差速前牵引但使汽车更多的推动力量。推荐用於低抓地赛道。

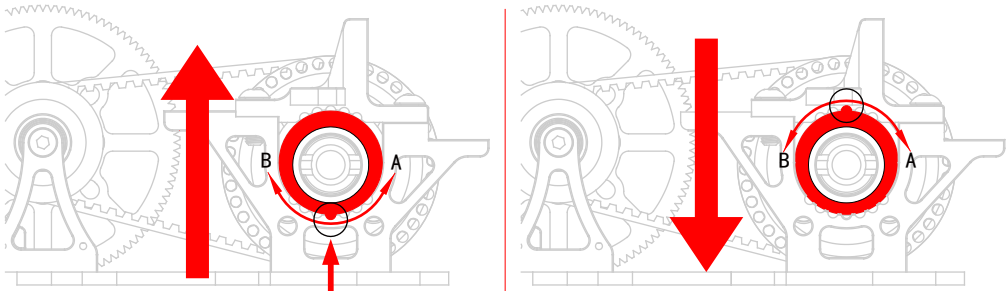


TO LOOSEN FRONT BELT: Rotate both rear nylon hubs in arrow direction A
TO TIGHTEN FRONT BELT: Rotate both rear nylon hubs in arrow direction B

INITIAL POSITION
PLACE TAB IN THIS BOTTOM NOTCH

## 12 Side Panel On The Cover 侧板上盖

**Bag-B**

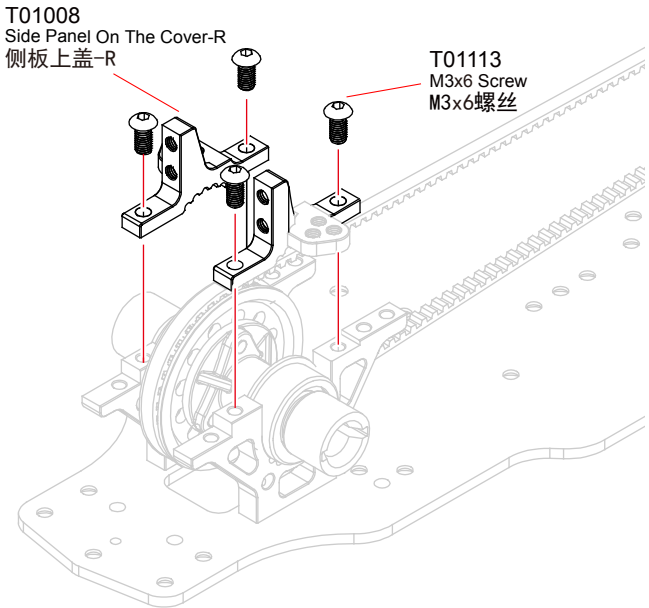


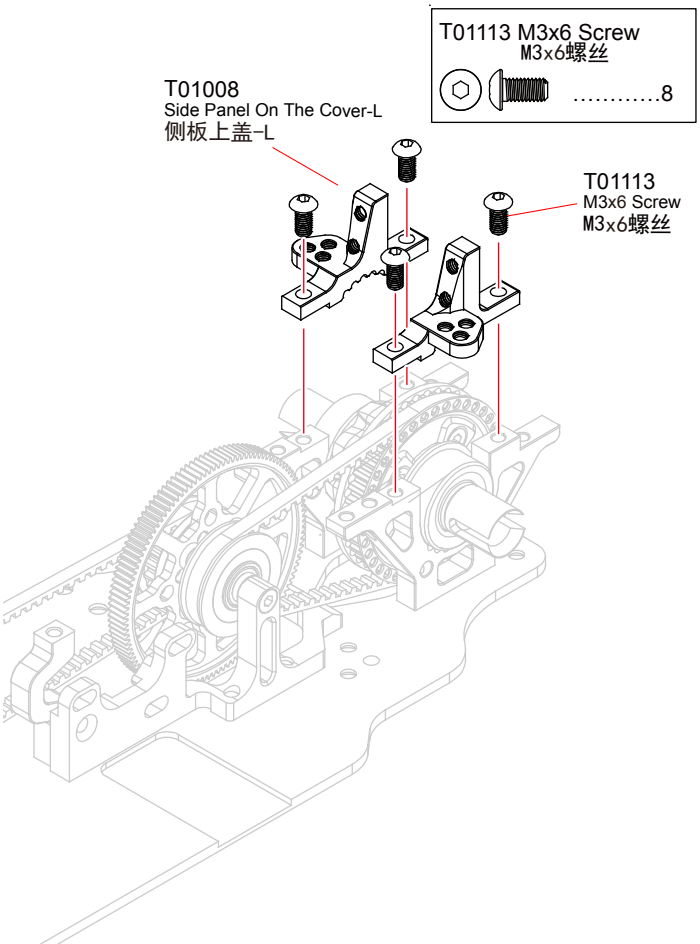


## 13 Front&Rear Shock Tower 前后避震器架

**Bag-B**

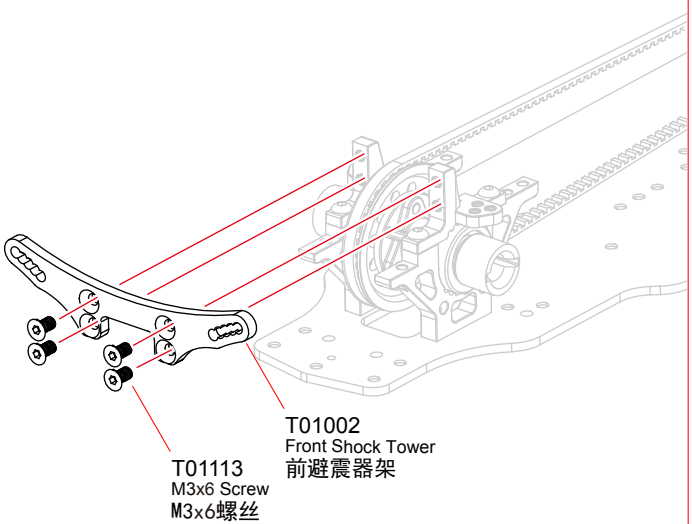


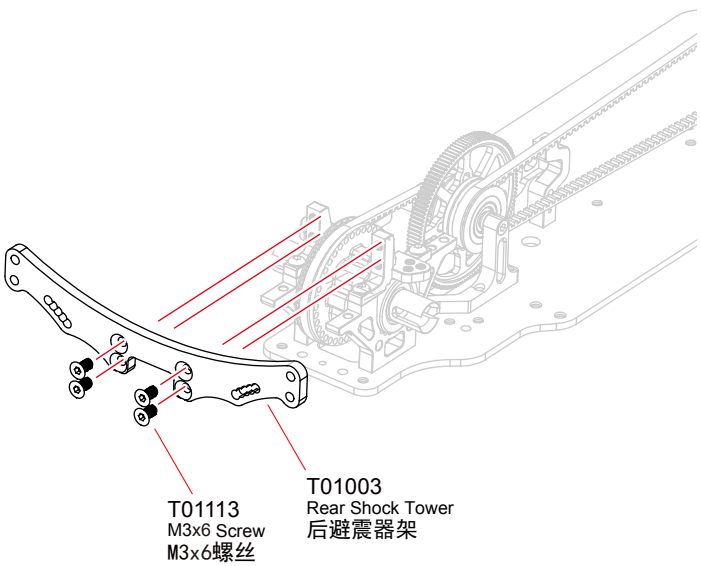


T01113 M3x6 Screw
M3x6螺丝
.....8

Apply threadlocker(screw cement)
打螺絲膠水

Assemble both Left and Right
組裝左和右

## 14 Front Lower Arm 前下摆臂 Bag-C

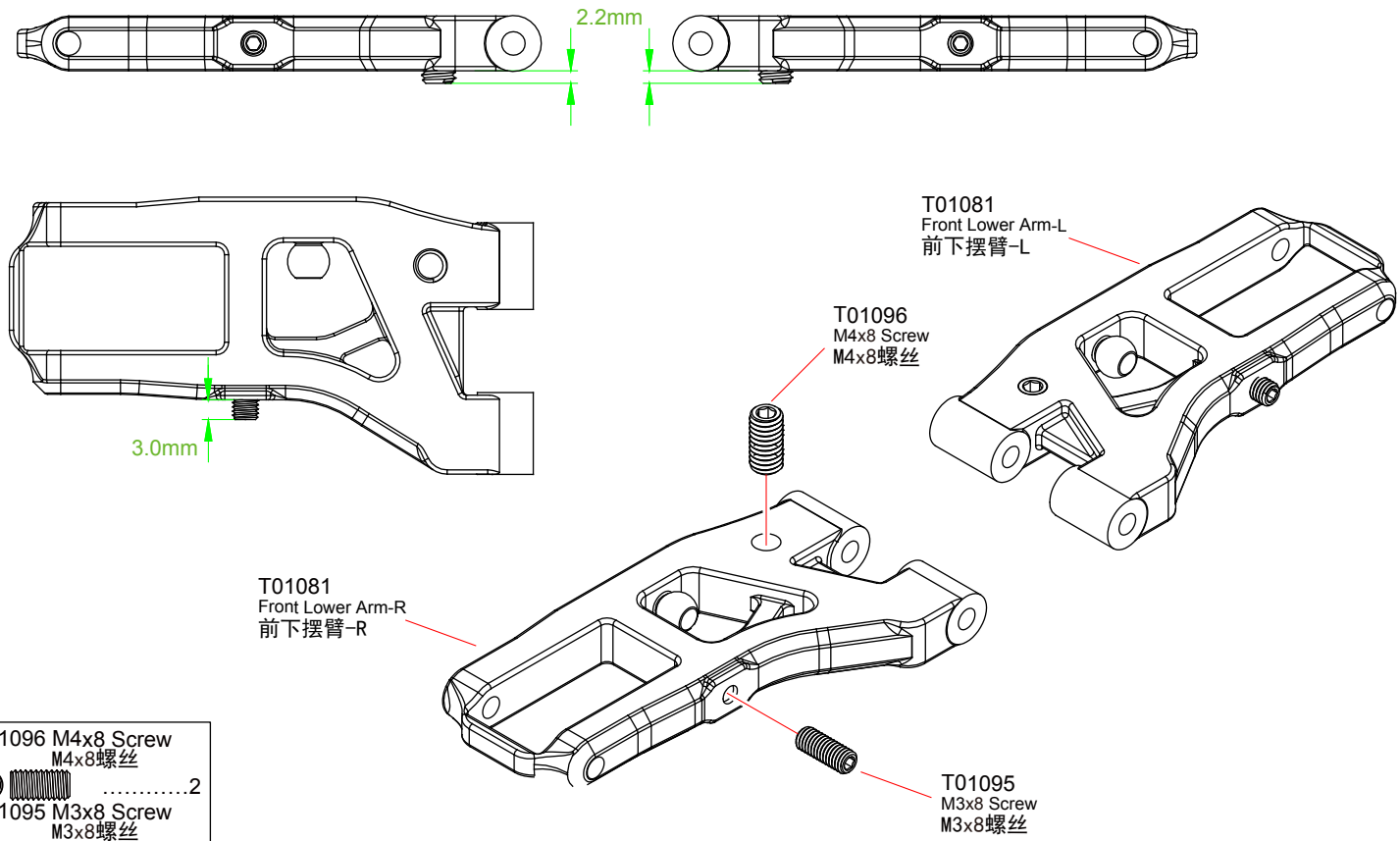


T01096 M4x8 Screw
M4x8螺丝 .....2
T01095 M3x8 Screw
M3x8螺丝 .....2

## 15 Rear Lower Arm 后下摆臂 Bag-C

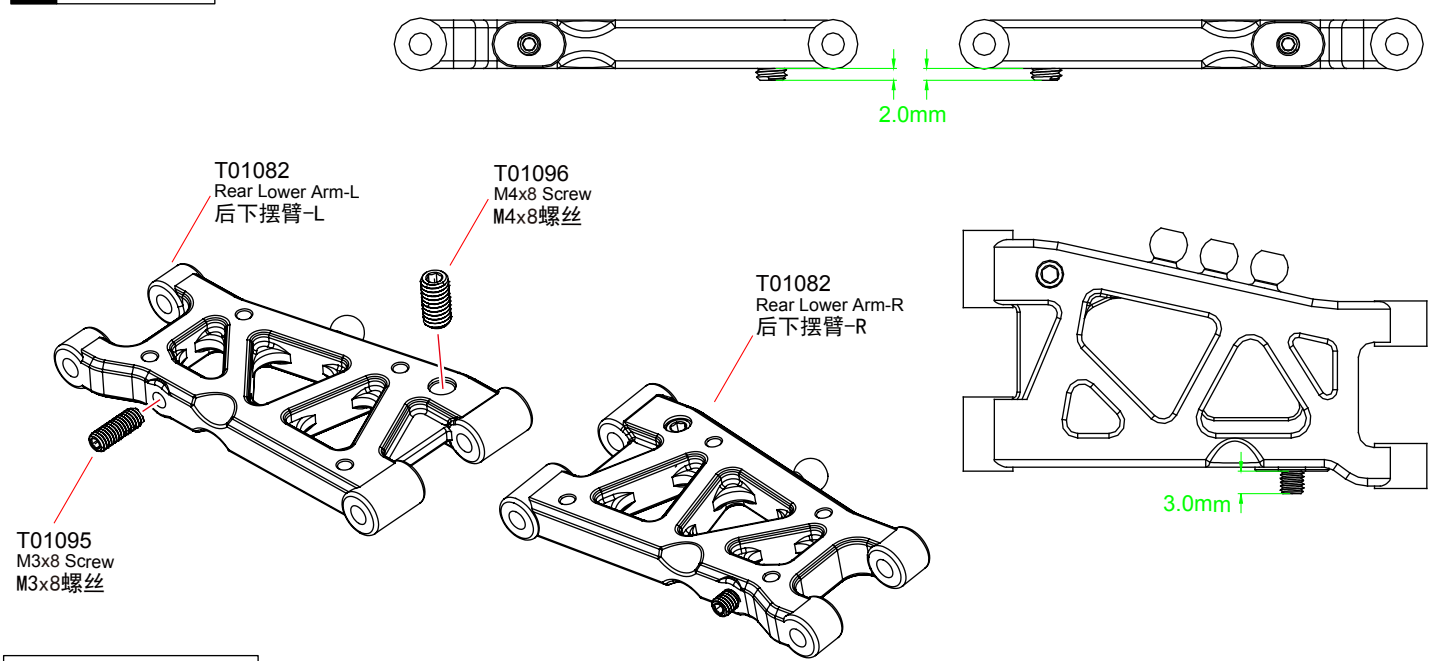


T01096 M4x8 Screw
M4x8螺丝 .....2
T01095 M3x8 Screw
M3x8螺丝 .....2

L/R Assemble both Left and Right
組裝左和右

## 16 Arm Mount/Projection Seat 摆臂固定座/投影座 Bag-C

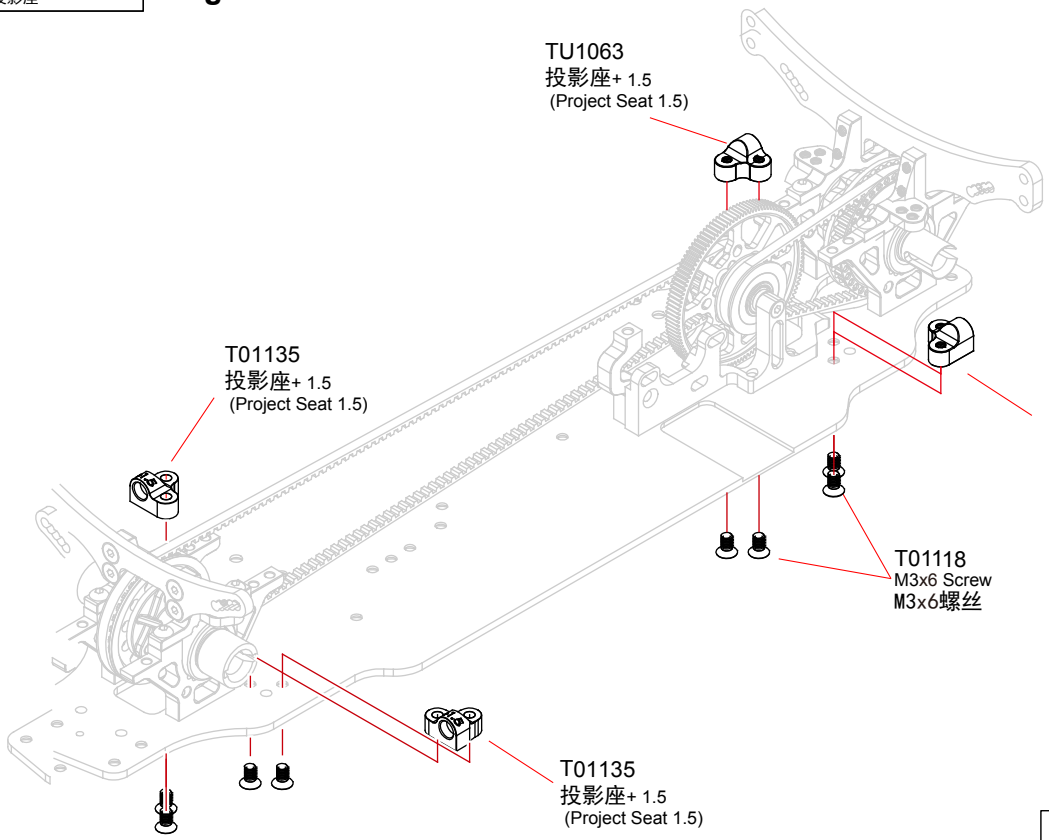


T01118 M3x6 Screw
M3x6螺丝
.....8

## 17 Front Lower Arm 前下摆臂 Bag-C

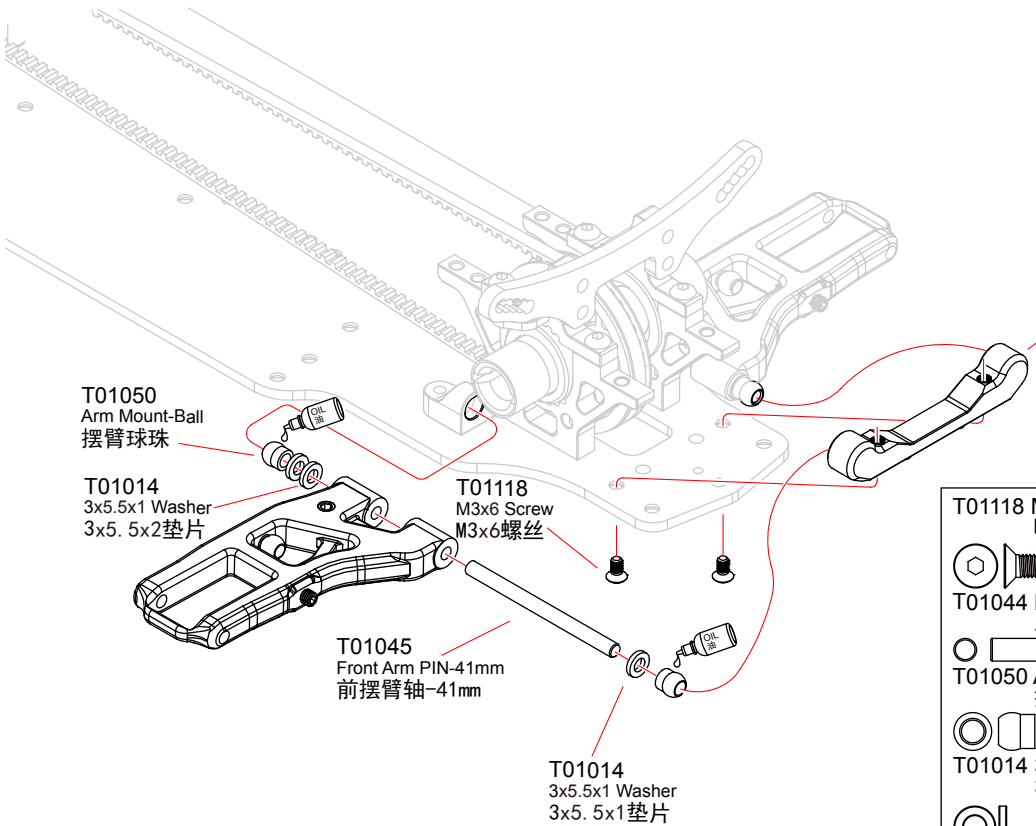


T01118 M3x6 Screw
M3x6螺丝
.....2

T01044 Rear Arm PIN-41mm
后摆臂轴-41mm
.....2

T01050 Arm Mount-Ball
摆臂球珠
.....4

T01014 3x5.5x1 Washer
3x5. 5x1垫片
.....6

L/R Assemble both Left and Right
組裝左和右

## 18 Rear Lower Arm 后下摆臂 Bag-C

T01044 Rear Arm PIN-44mm
后摆臂轴-44mm .....2

T01050 Arm Mount-Ball
摆臂球珠 .....4

T01015 3x5.5x2 Washer
3x5. 5x2垫片 .....2

T01014 3x5.5x1 Washer
3x5. 5x1垫片 .....2

T01118 M3x6 Screw
M3x6螺丝 .....2

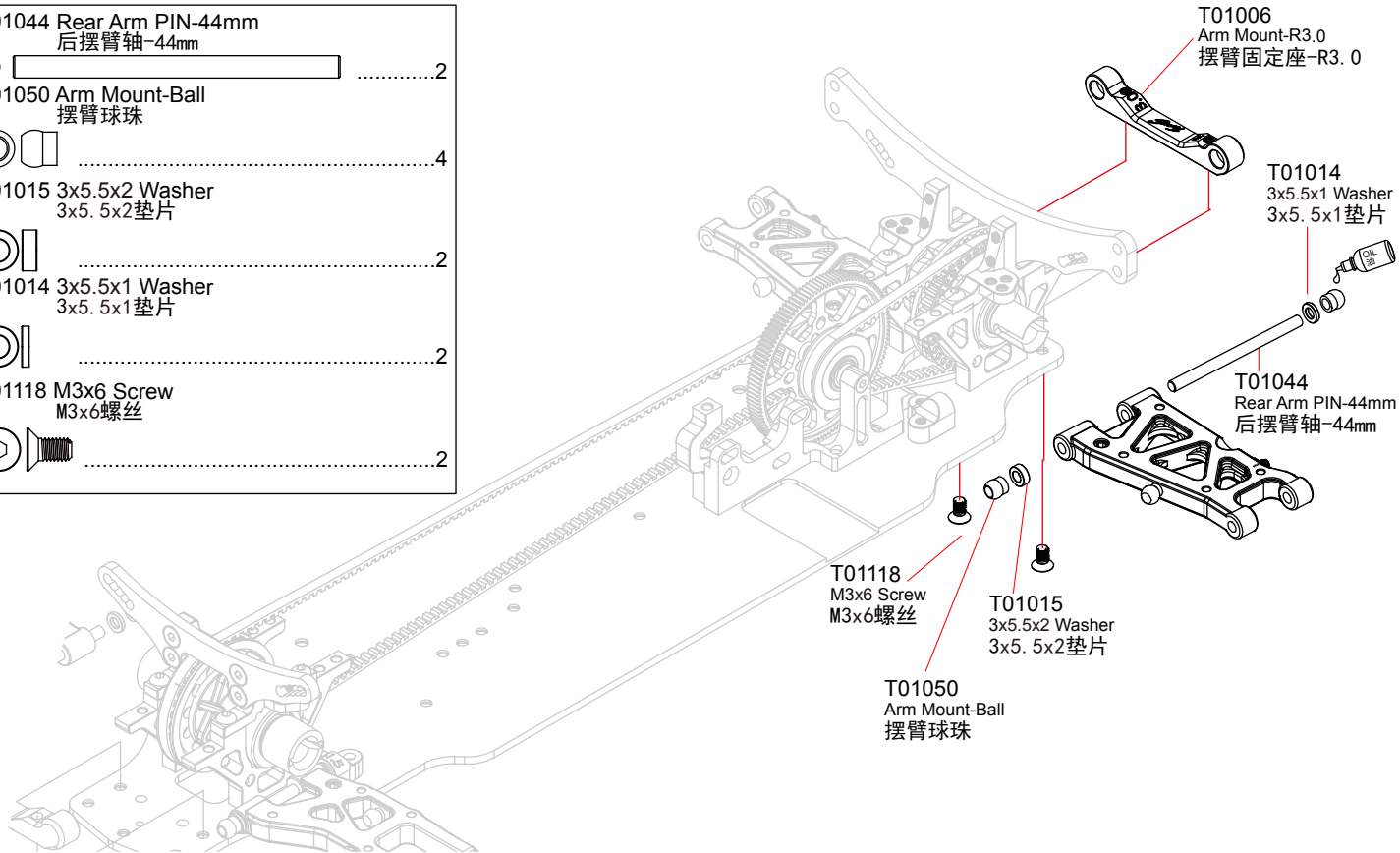


## 19 Turnbuckle 拉杆 Bag-D

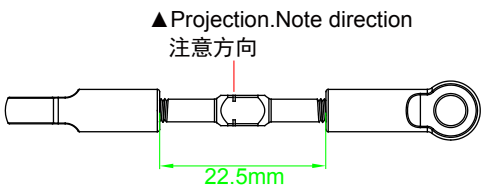


1:1 x1 Draglink-Lift
转向拉杆-左

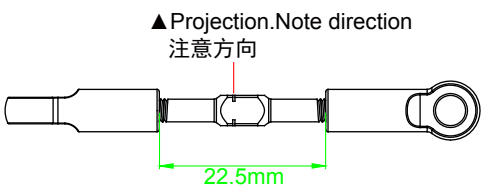


1:1 x1 Draglink-Right
转向拉杆-右

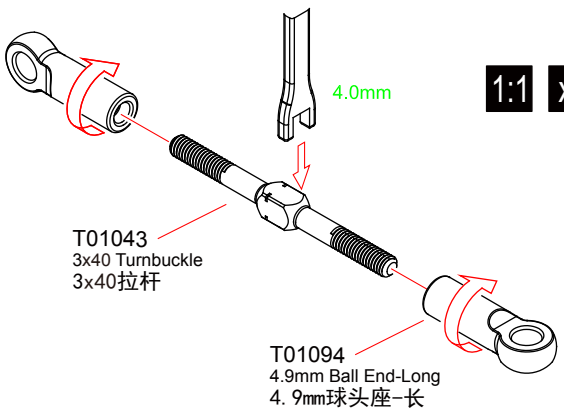


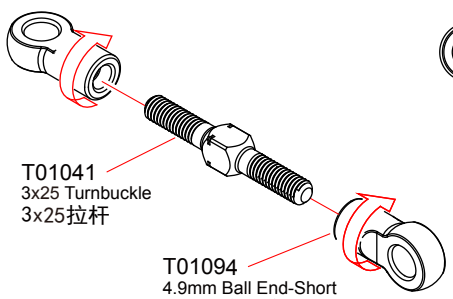


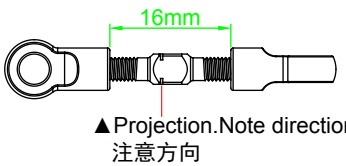


1:1 x1 Steering Servo Rod
转向伺服拉杆

T01043 3x40 Turnbuckle
3x40拉杆 .....2

T01094 4.9mm Ball End-Long
4. 9mm球头座-长 .....4

T01041 3x25 Turnbuckle
3x25拉杆 .....1

T01094 4.9mm Ball End-Short
4. 9mm球头座-短 .....2

1:1 Ture-to -scale diagram 圖形比例

x1 Assemble as many times as specified 需組裝次數

L/R Assemble both Left and Right 組裝左和右

## 20 Steering System 转向系统 Bag-D

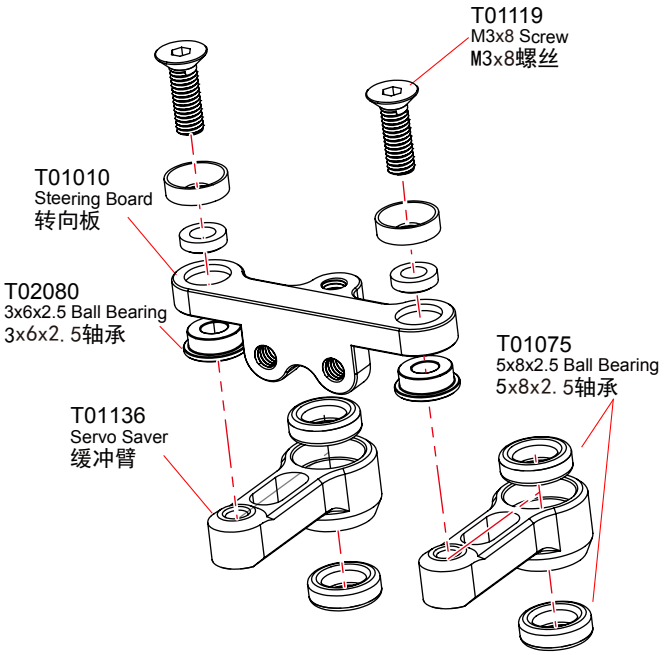


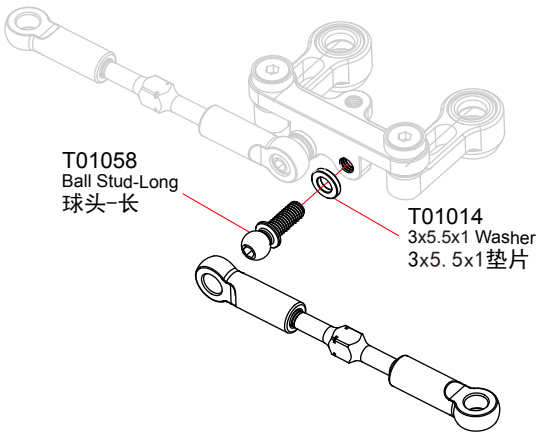


T01075 5x8x2.5 Ball Bearing
5x8x2. 5轴承 .....4

T02080 3x6x2.5 Ball Bearing
3x6x2. 5轴承 .....2

T01119 M3x8 Screw
M3x8螺丝 .....2

T01014 3x5.5x1 Washer
3x5. 5x1垫片 .....2

T01058 Ball Stud-Long
球头-长 .....2

## 21 Steering System 转向系统 Bag-D

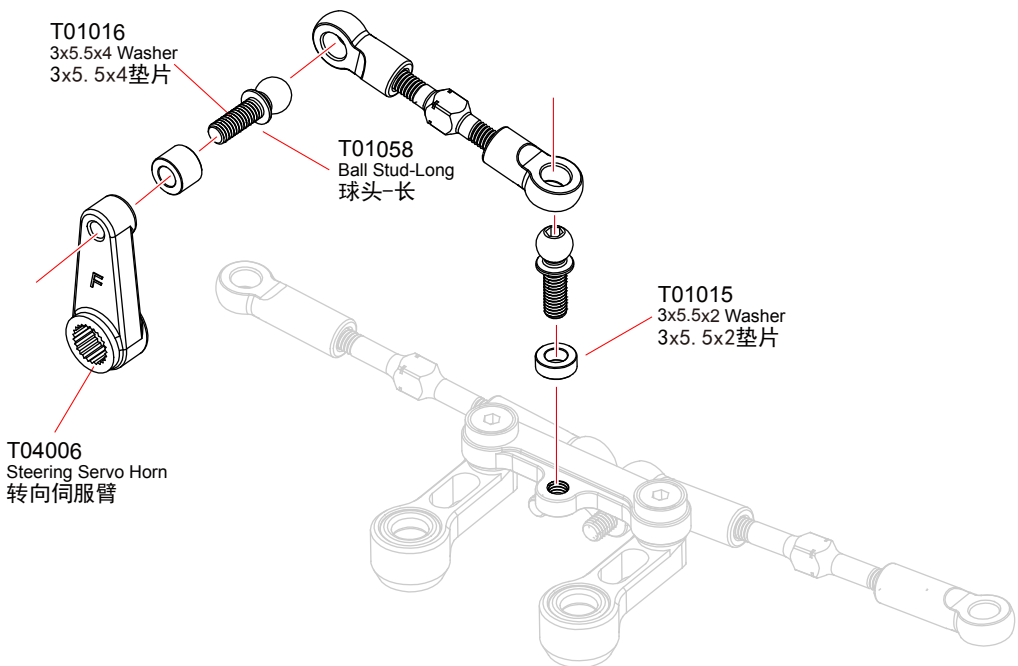


T01016 3x5.5x4 Washer
3x5. 5x4垫片 .....1

T01015 3x5.5x2 Washer
3x5. 5x2垫片 .....1

T01058 Ball Stud-Long
球头-长 .....2

Apply threadlocker(screw cement)
打螺絲膠水

## 22 Steering System 转向系统

## Bag-D

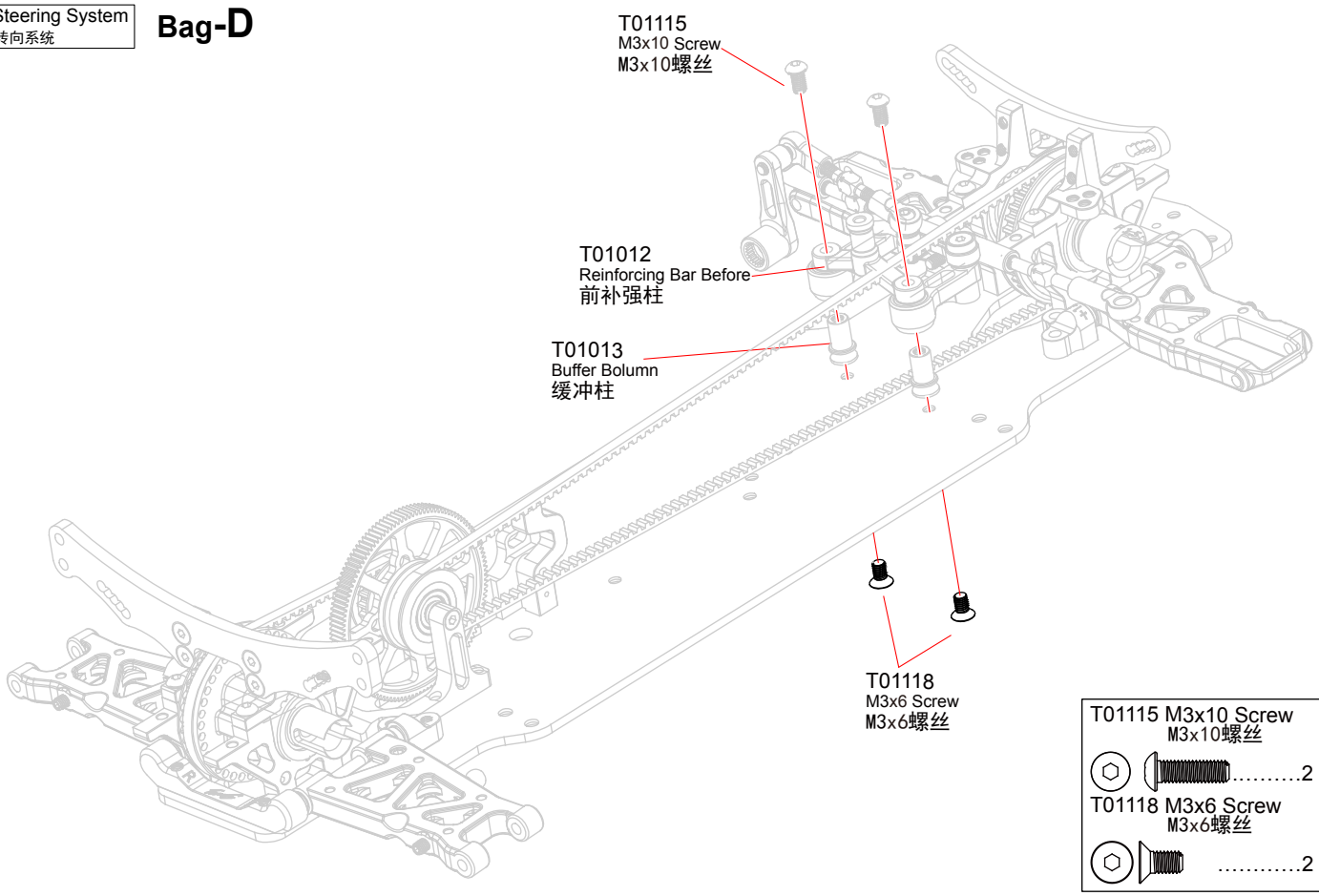


T01115 M3x10 Screw
M3x10螺丝 .....2

T01118 M3x6 Screw
M3x6螺丝 .....2

## 23 Top Deck 二楼板

## Bag-D

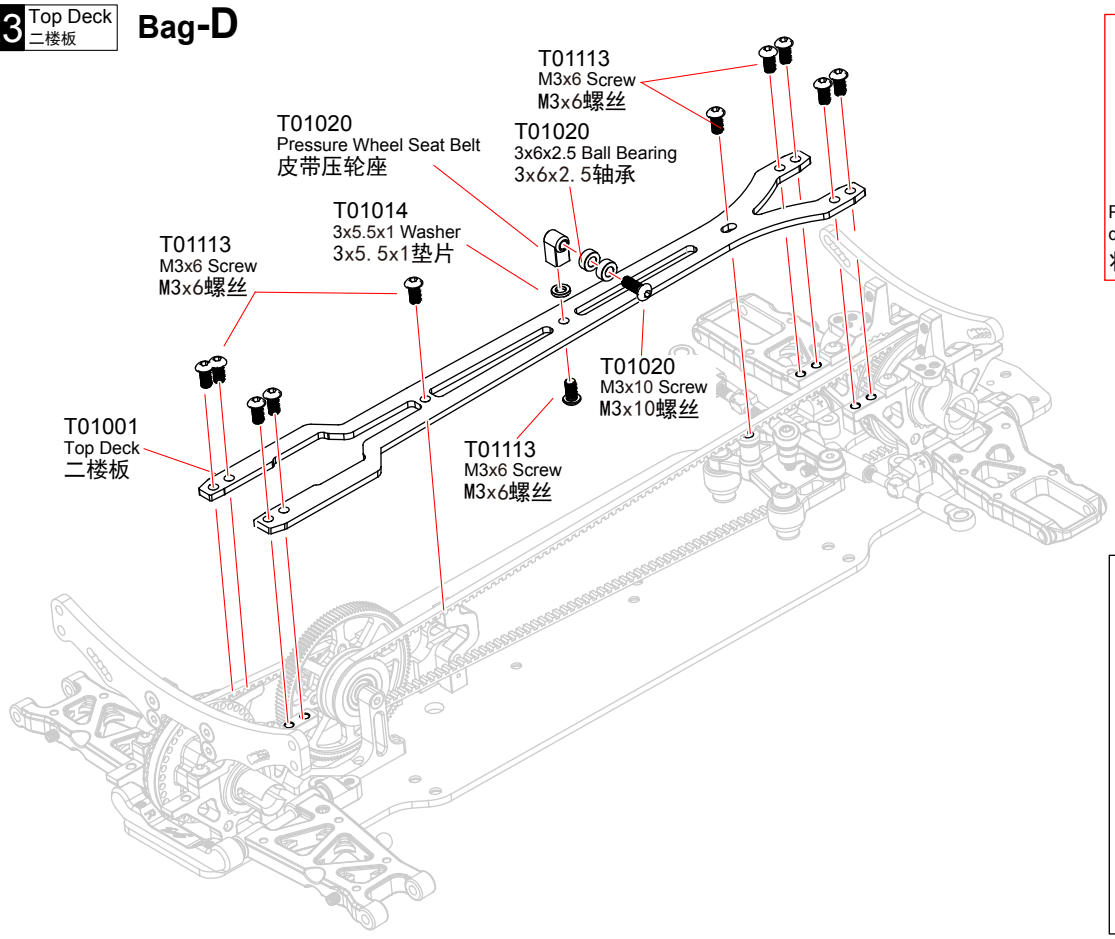


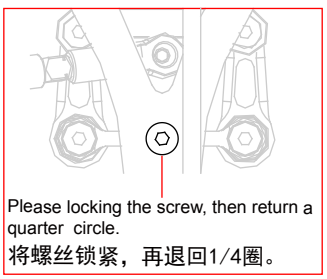

Please locking the screw, then return a quarter circle.
将螺丝锁紧，再退回1/4圈。

T01014 3x5.5x1 Washer
3x5. 5x1垫片 .....1

T01020 3x6x2.5 Ball Bearing
3x6x2. 5轴承 .....2

T01020 M3x10 Screw
M3x10螺丝 .....1

T01113 M3x6 Screw
M3x6螺丝 .....11

## 24 CVD Group CVD组 Bag-E

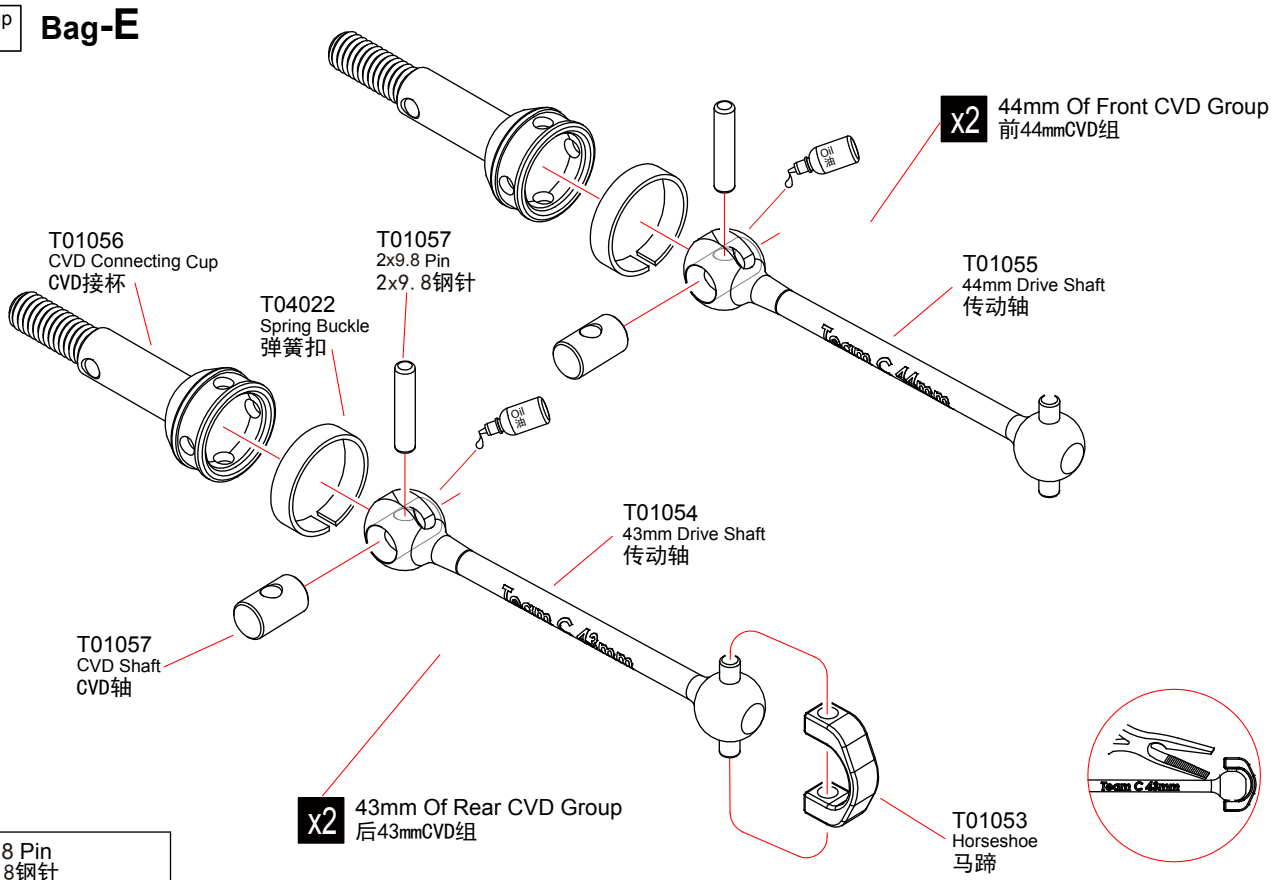


T01057 2x9.8 Pin
2x9. 8钢针 .....4

## 25 Rear Hub Carriers 后轮座 Bag-E x2

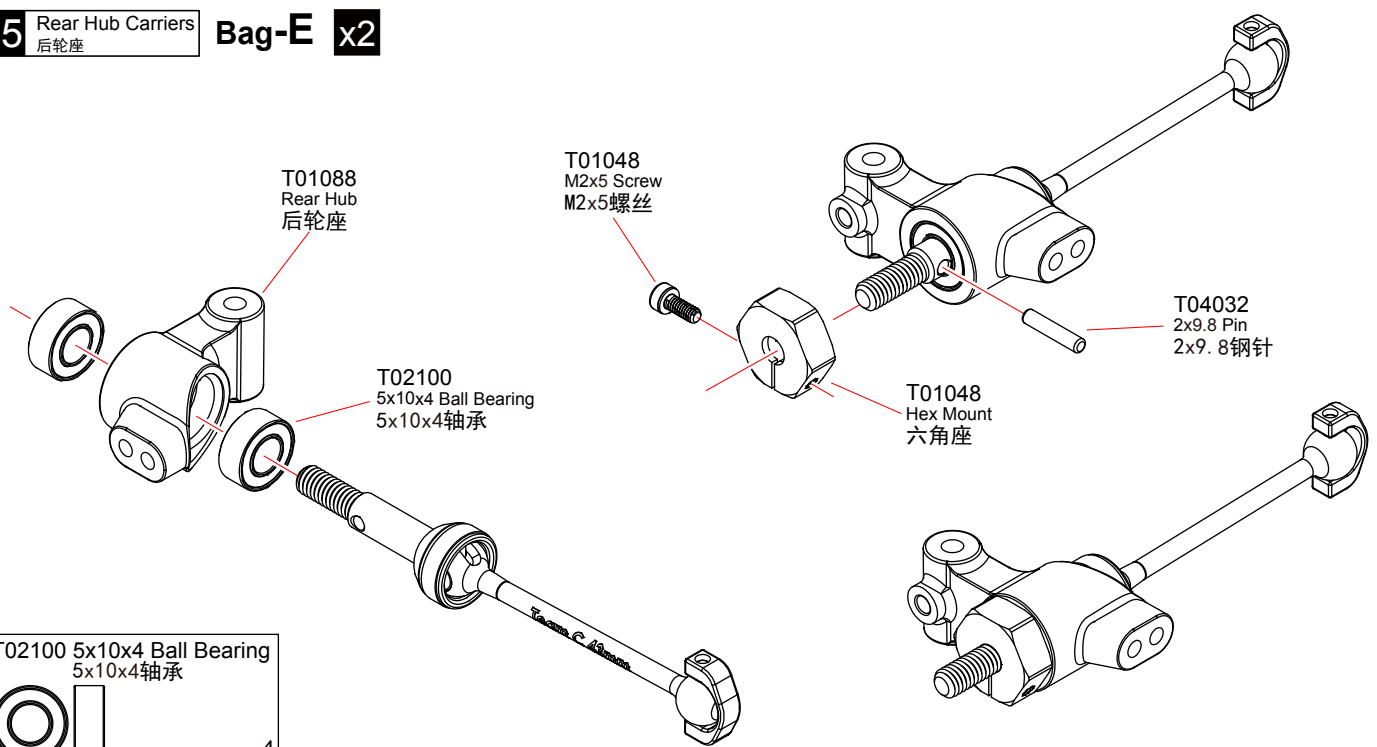


T02100 5x10x4 Ball Bearing
5x10x4轴承 .....4

T01048 M2x5 Screw
M2x5螺丝 .....2

T04032 2x9.8 Pin
2x9. 8钢针 .....2

L/R Assemble both Left and Right
組裝左和右

x2 Assemble as many times as specified
需組裝數量

## 26 Front Hub Carriers 前轮座 Bag-E x2

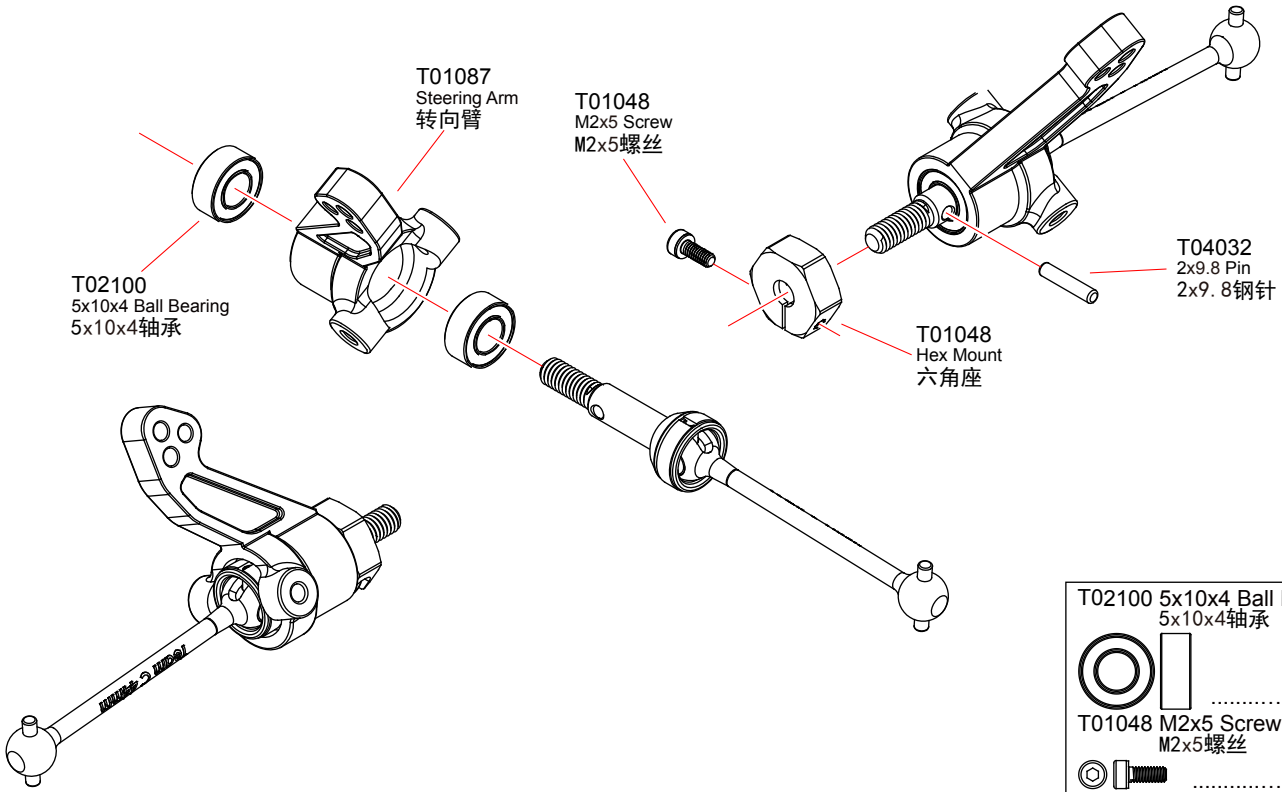


T02100 5x10x4 Ball Bearing
5x10x4轴承 .....4

T01048 M2x5 Screw
M2x5螺丝 .....2

T04032 2x9.8 Pin
2x9. 8钢针 .....2

## 27 Front Hub Carriers 前轮座 Bag-E

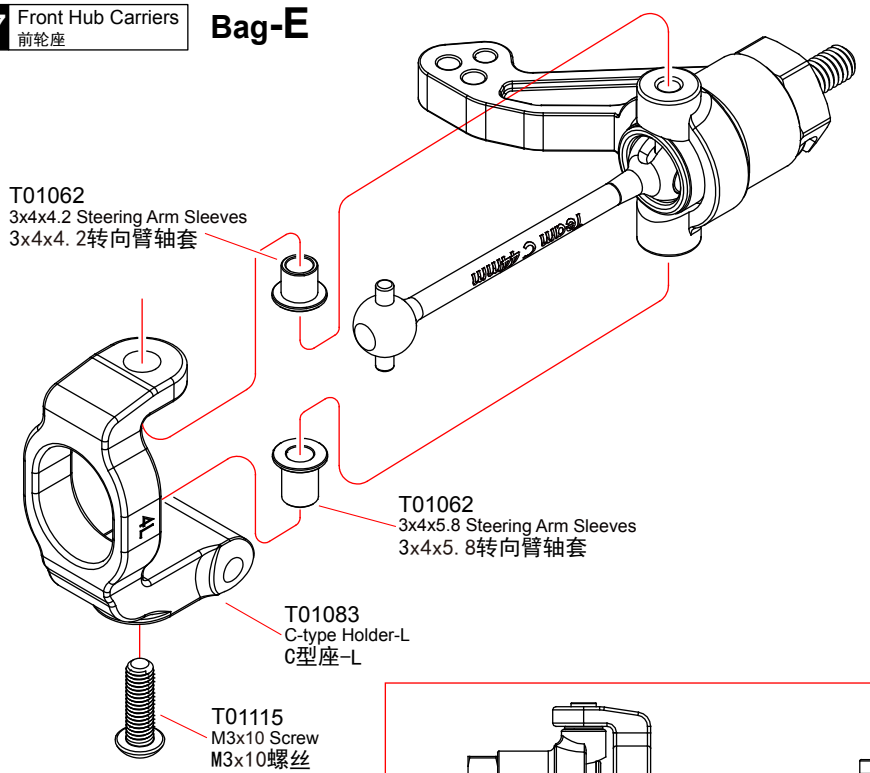


T01062 3x4x4.2 Steering Arm Sleeves
3x4x4. 2转向臂轴套 .....2

T01062 3x4x5.8 Steering Arm Sleeves
3x4x5. 8转向臂轴套 .....2

T01115 M3x10 Screw
M3x10螺丝 .....2

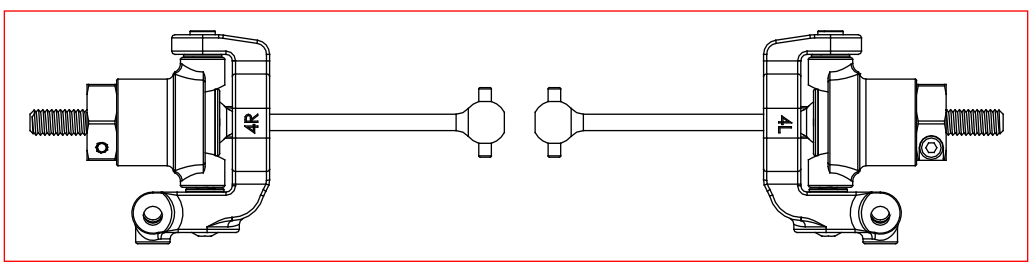


L/R Assemble both Left and Right
組裝左和右

x2 Assemble as many times as specified
需組裝數量

## 28 Turnbuckle 拉杆 Bag-E

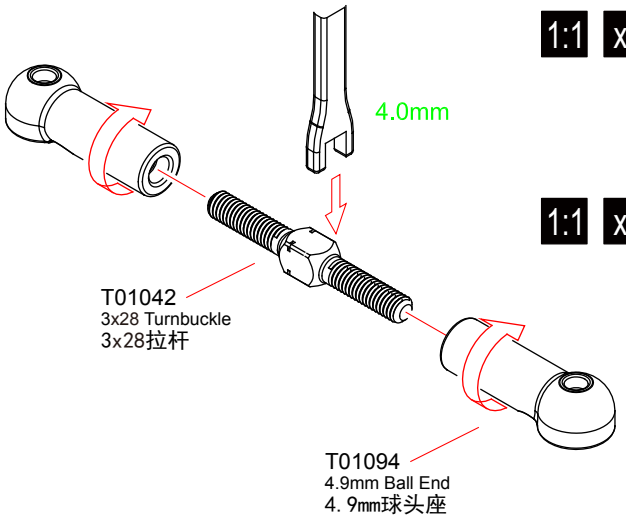


1:1 x2 Front Upper Rod 前上拉杆

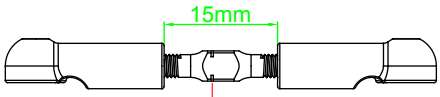


▲Projection.Note direction
注意方向

1:1 x2 Rear Upper Rod 后上拉杆

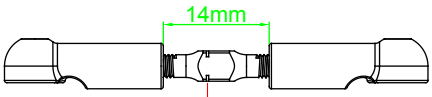


▲Projection.Note direction
注意方向

| | |
|---|---|
| T01042 3x28 Turnbuckle 3x28拉杆 | 4 |
| T01094 4.9mm Ball End 4. 9mm球头座 | 8 |

## 29 Rear Suspension Arm 后摆臂 Bag-E

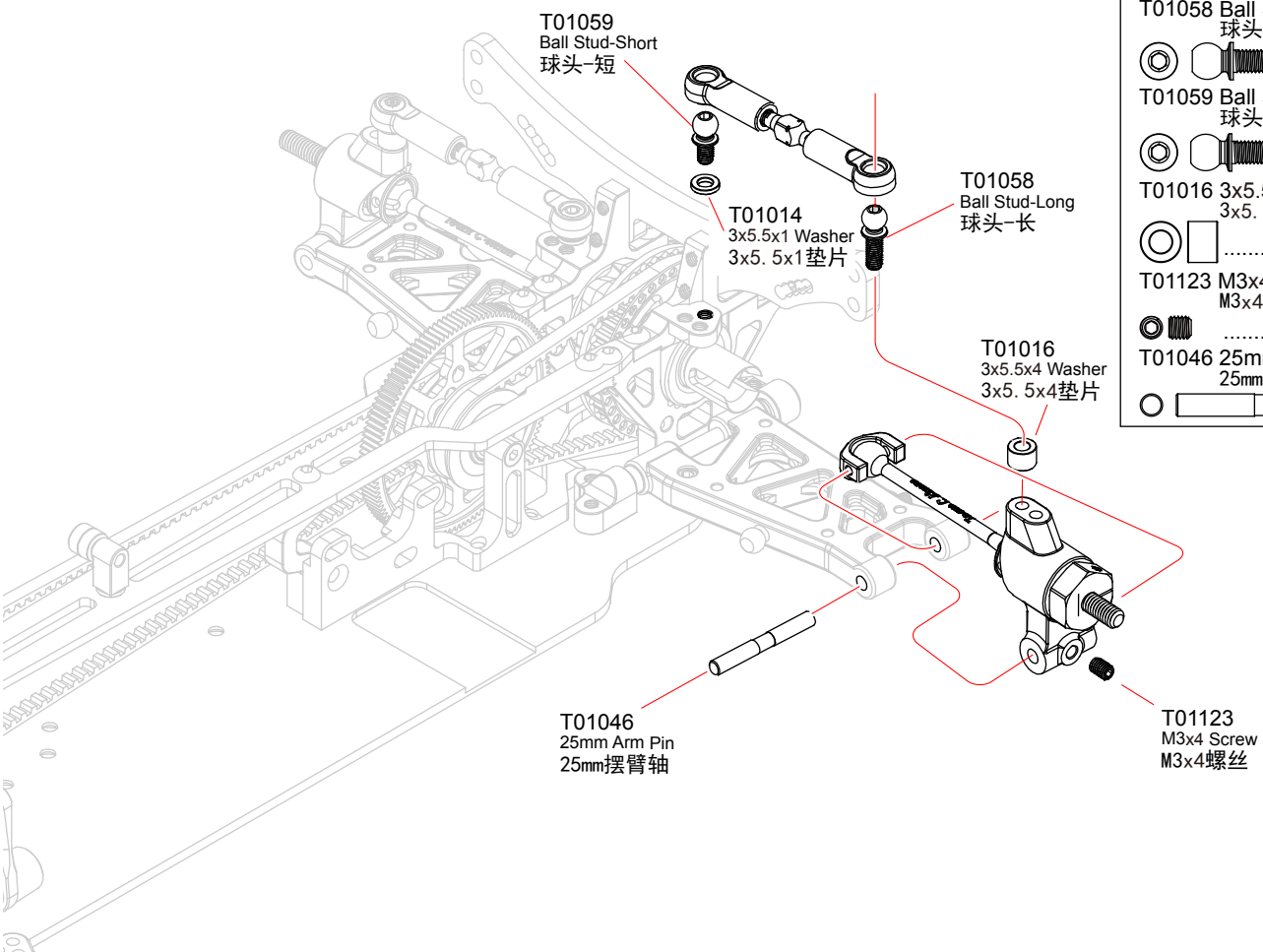


| | |
|---|---|
| T01014 3x5.5x1 Washer 3x5. 5x1垫片 | 2 |
| T01058 Ball Stud-Long 球头-长 | 2 |
| T01059 Ball Stud-Short 球头-短 | 2 |
| T01016 3x5.5x4 Washer 3x5. 5x4垫片 | 2 |
| T01123 M3x4 Screw M3x4螺丝 | 2 |
| T01046 25mm Arm Pin 25mm摆臂轴 | 2 |

L/R Assemble both Left and Right 組裝左和右

1:1 Ture-to -scale diagram 圖形比例

x2 Assemble as many times as specified 需組裝數量

## 30 Front Suspension Arm 前摆臂 Bag-E

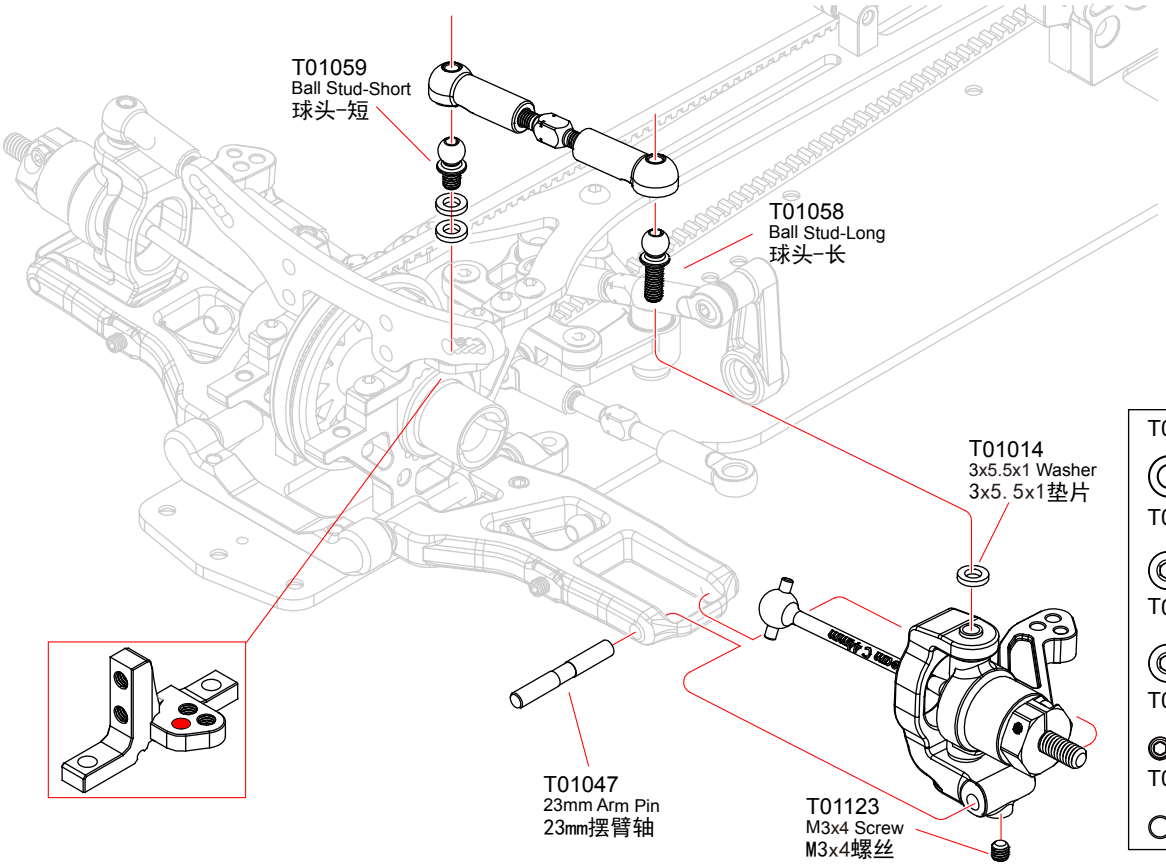


| | |
|---|---|
| T01014 3x5.5x1 Washer 3x5. 5x1垫片 | 6 |
| T01058 Ball Stud-Long 球头-长 | 2 |
| T01059 Ball Stud-Short 球头-短 | 2 |
| T01123 M3x4 Screw M3x4螺丝 | 2 |
| T01046 25mm Arm Pin 25mm摆臂轴 | 2 |

## 31 Servo Arm 伺服臂 Bag-E

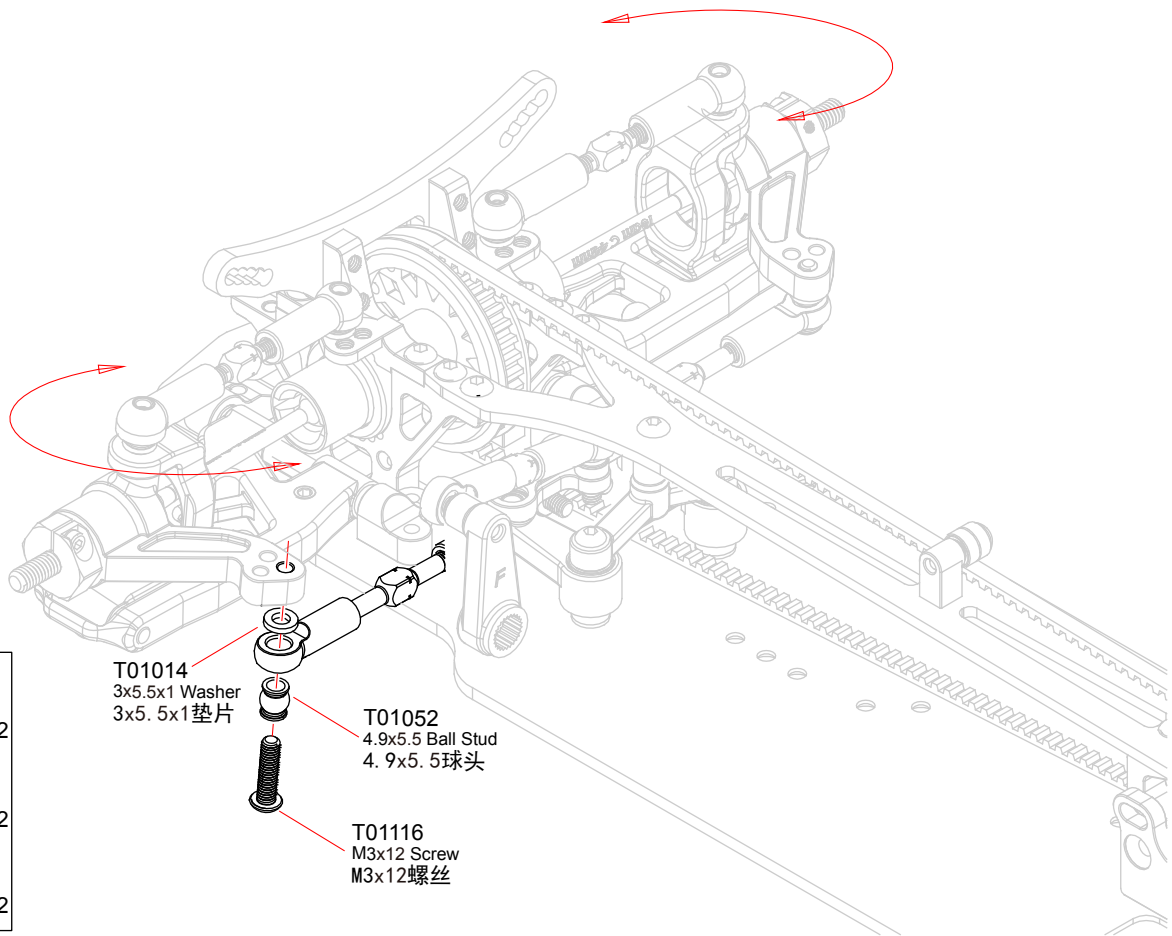


| | |
|---|---|
| T01052 4.9x5.5 Ball Stud 4. 9x5. 5球头 | 2 |
| T01014 3x5.5x1 Washer 3x5. 5x1垫片 | 2 |
| T01116 M3x12 Screw M3x12螺丝 | 2 |

L/R Assemble both Left and Right
組裝左和右

## 32 Turnbuckle 拉杆 Bag-F

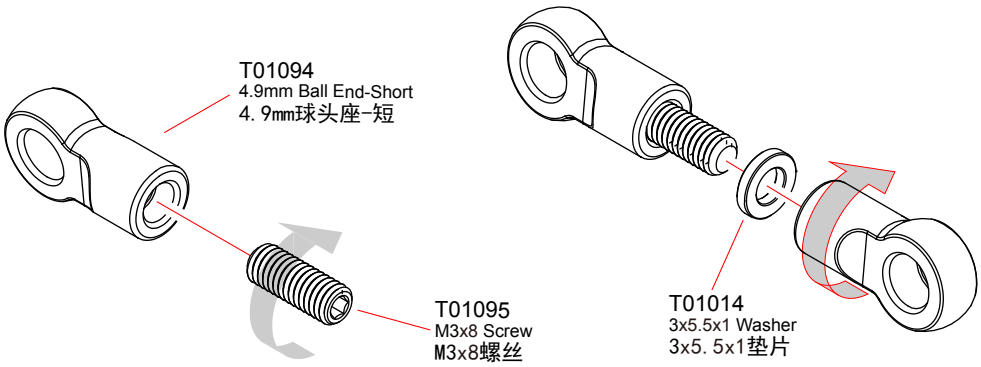


T01014 3x5.5x1 Washer
3x5. 5x1垫片
.....4
T01094 4.9mm Ball End-Short
4. 9mm球头座-短
.....8
T01095 M3x8 Screw
M3x8螺丝
.....4

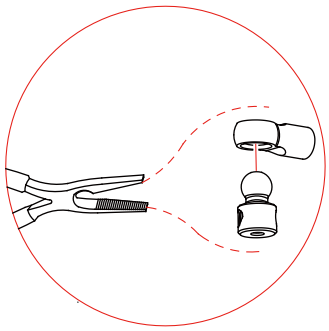

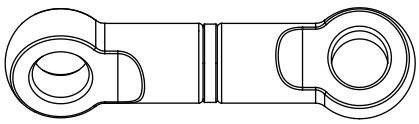

## 33 Front Swaybar 前防倾杆 Bag-F

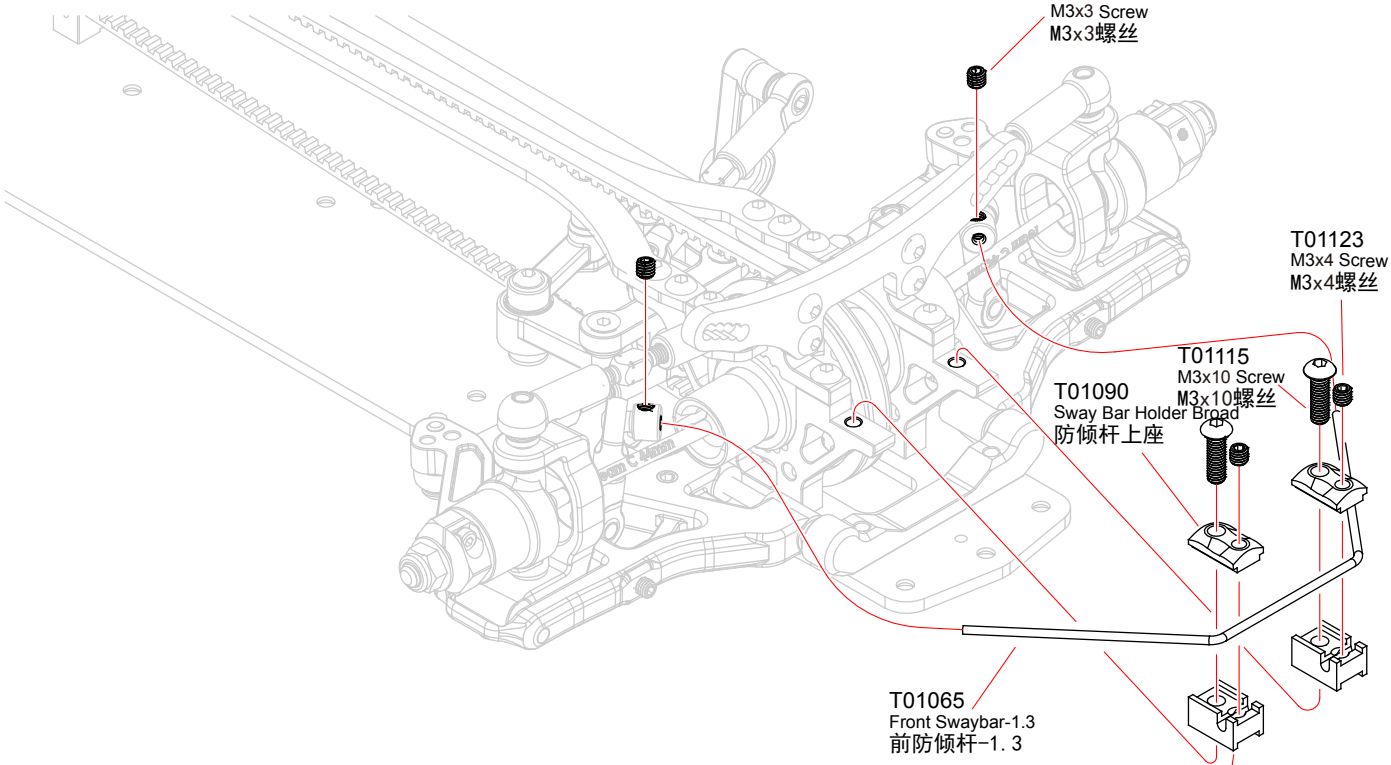


T01072 M3x3 Screw
M3x3螺丝
.....2
T01123 M3x4 Screw
M3x4螺丝
.....2
T01115 M3x10 Screw
M3x10螺丝
.....2

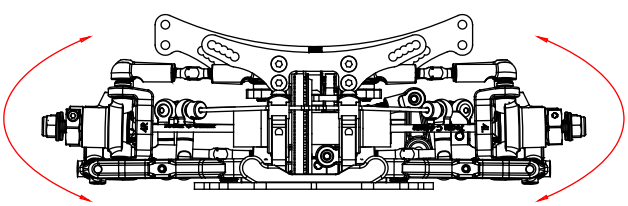

## 34 Rear Swaybar 后防倾杆 Bag-F

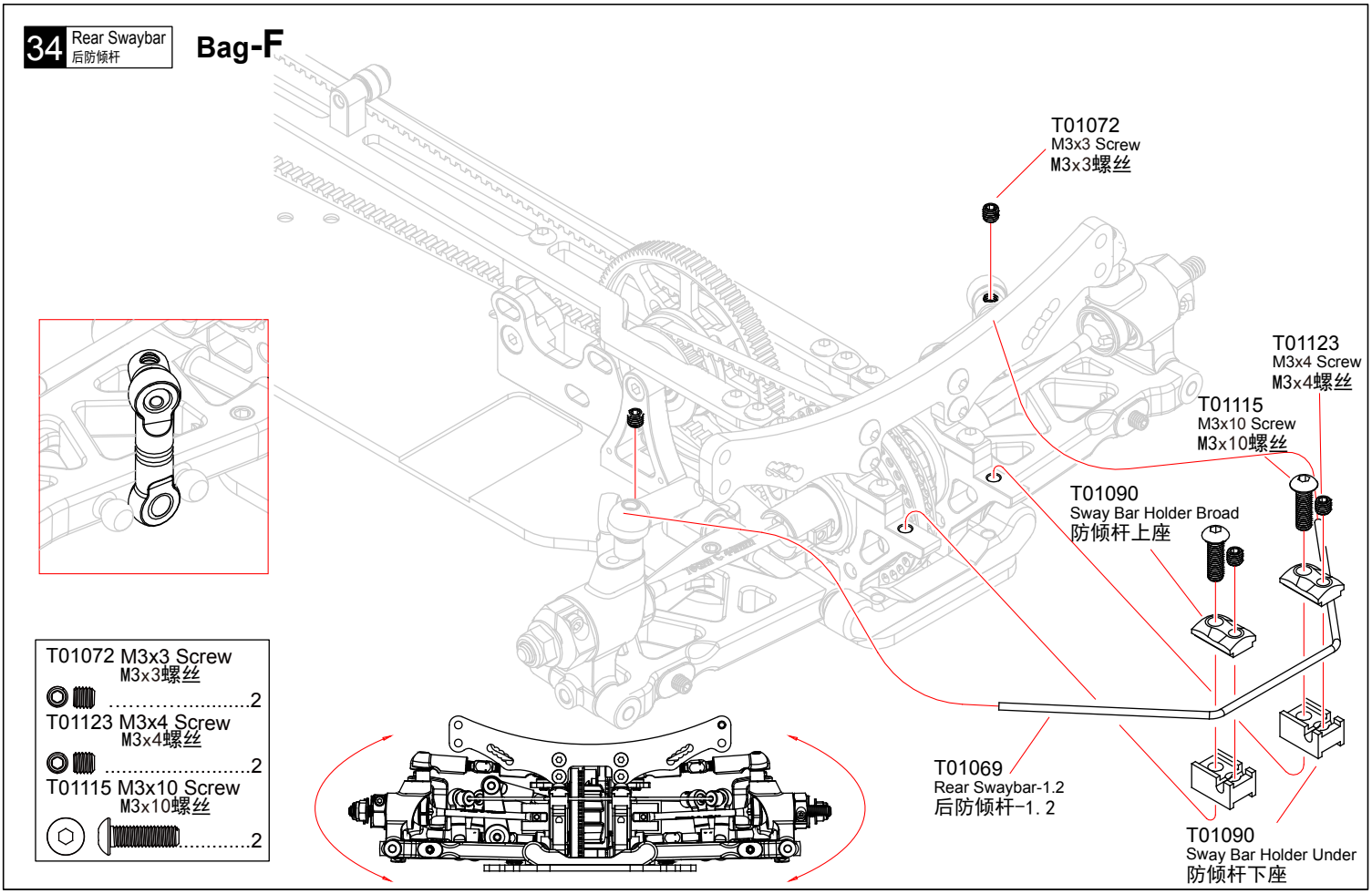


## 35 Shock Absorber 避震器 Bag-G x4

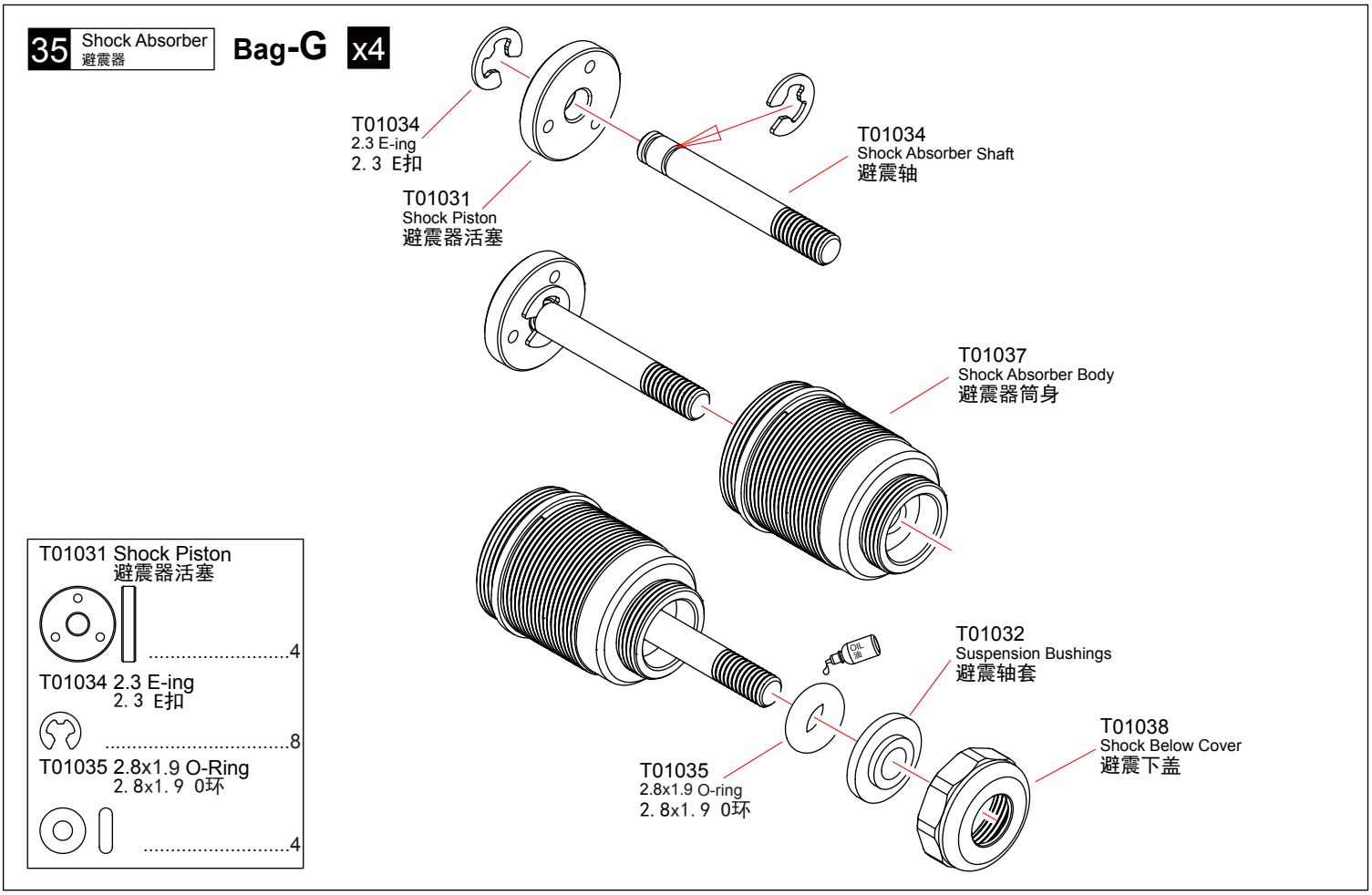


x4 Assemble as many times as specified
需組裝數量

## 36 Shock Absorber 避震器 Bag-G x4

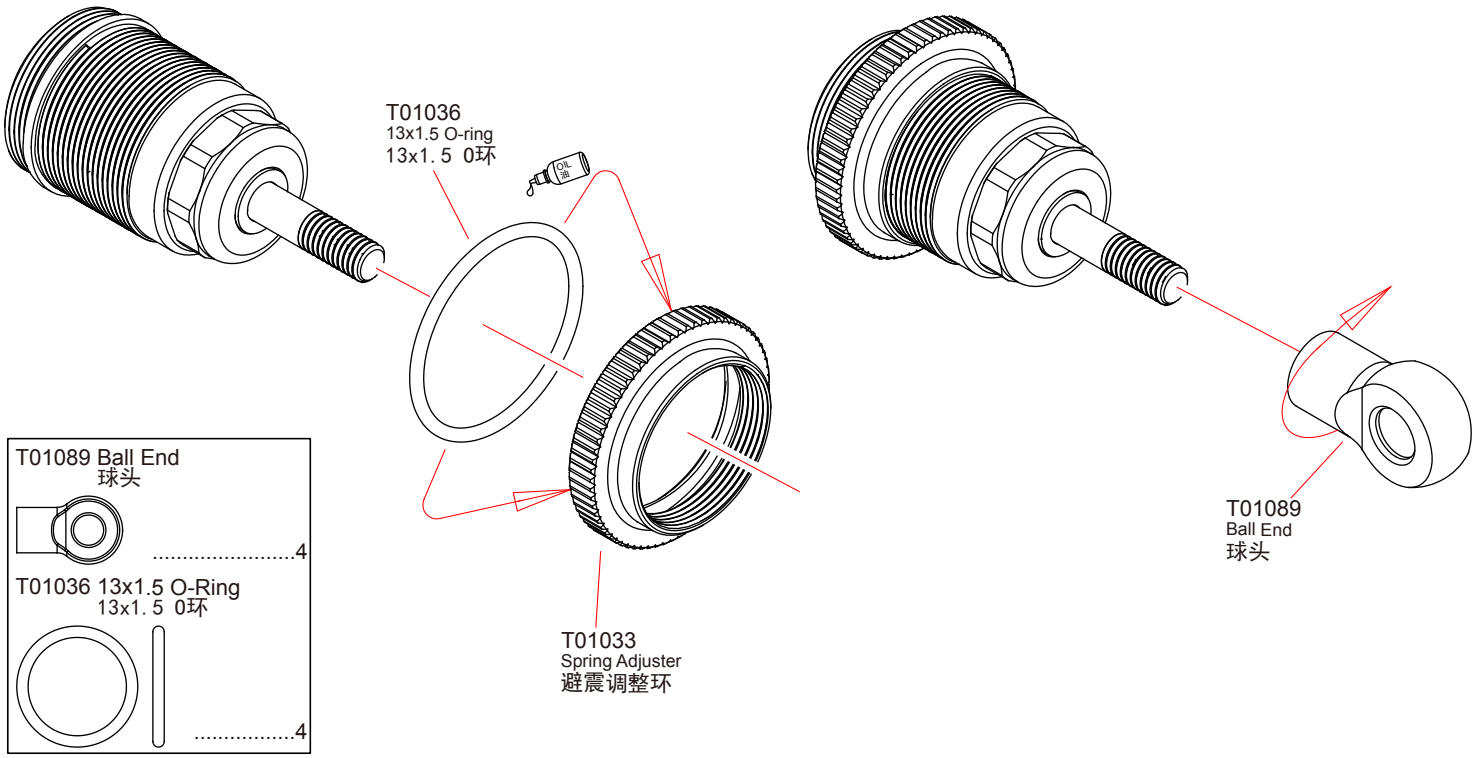


## 37 Shock Absorber 避震器 Bag-G x4

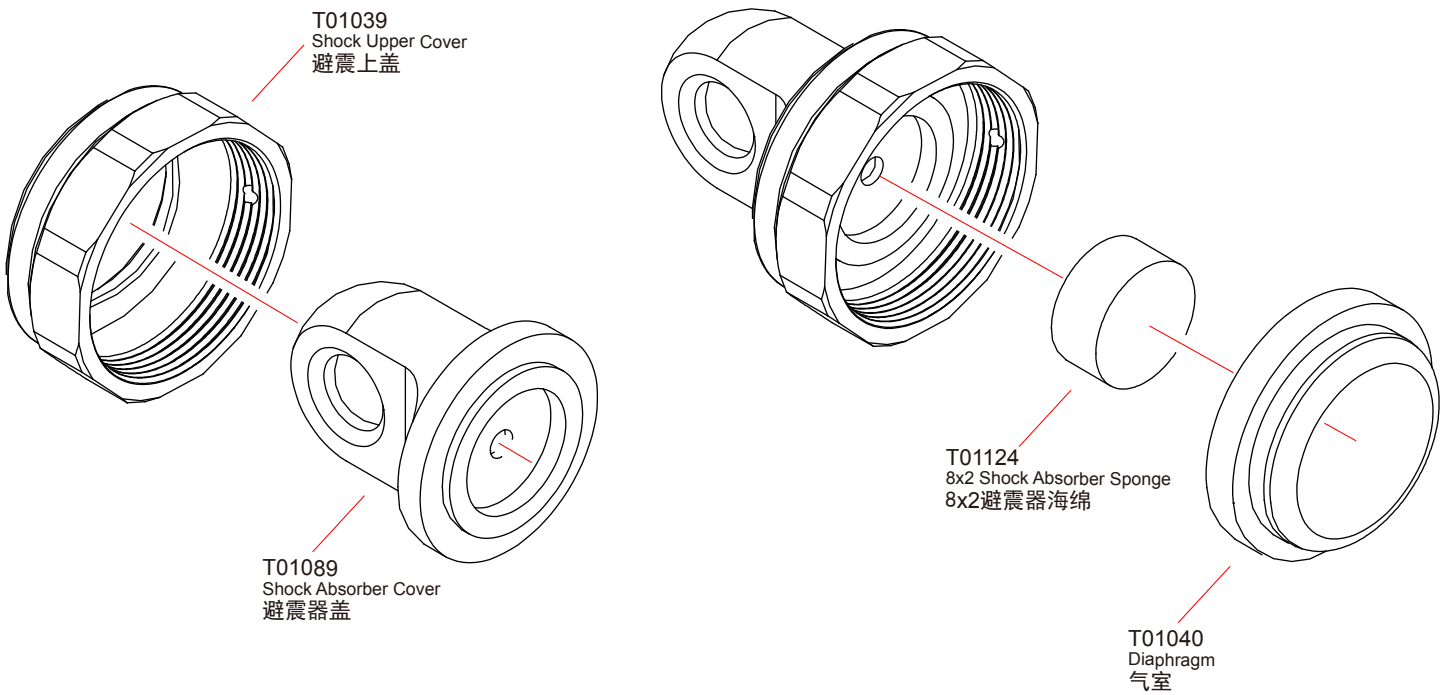


x4 Assemble as many times as specified
需組裝數量

## 38 Shock Absorber 避震器 Bag-G x4

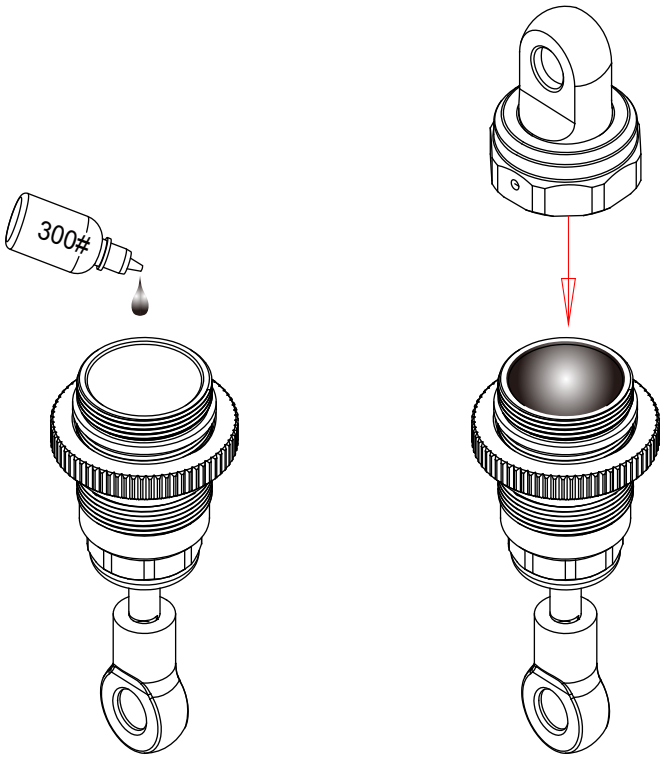


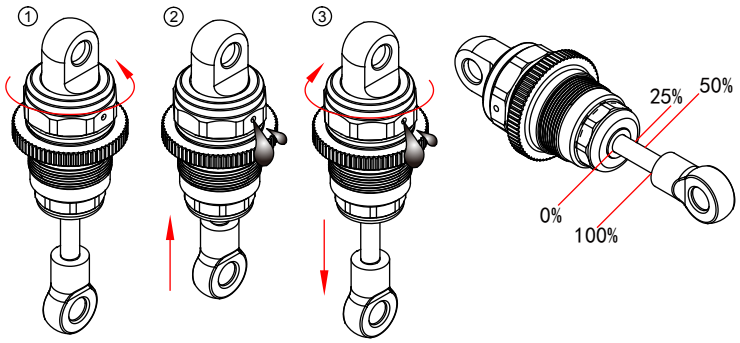


After the shock is assembled you have to set the shock rebound.
组装后的避震你必须设置避震复苏。

①Release the shock cap by 2-3 turns.
释放避震盖2 – 3转。

②Push the shock shaft fully up .For the first time the extra oil will release through the hole in the alu cap-nut.
推动避震轴完全了。第一次额外的石油将释放通过这个避震盖孔。

③Tighten the shock cup .When tightening the shock cup,extra oil will again release through the hole in the alu cap-nut.When tightening,the shock shaft will push out from the shock body.
紧缩避震盖。当紧缩避震盖, 额外的石油将再次释放通过这个避震盖孔。当紧缩, 避震轴将排出身体的冲击。

## 39 Shock Absorber 避震器 Bag-G x4

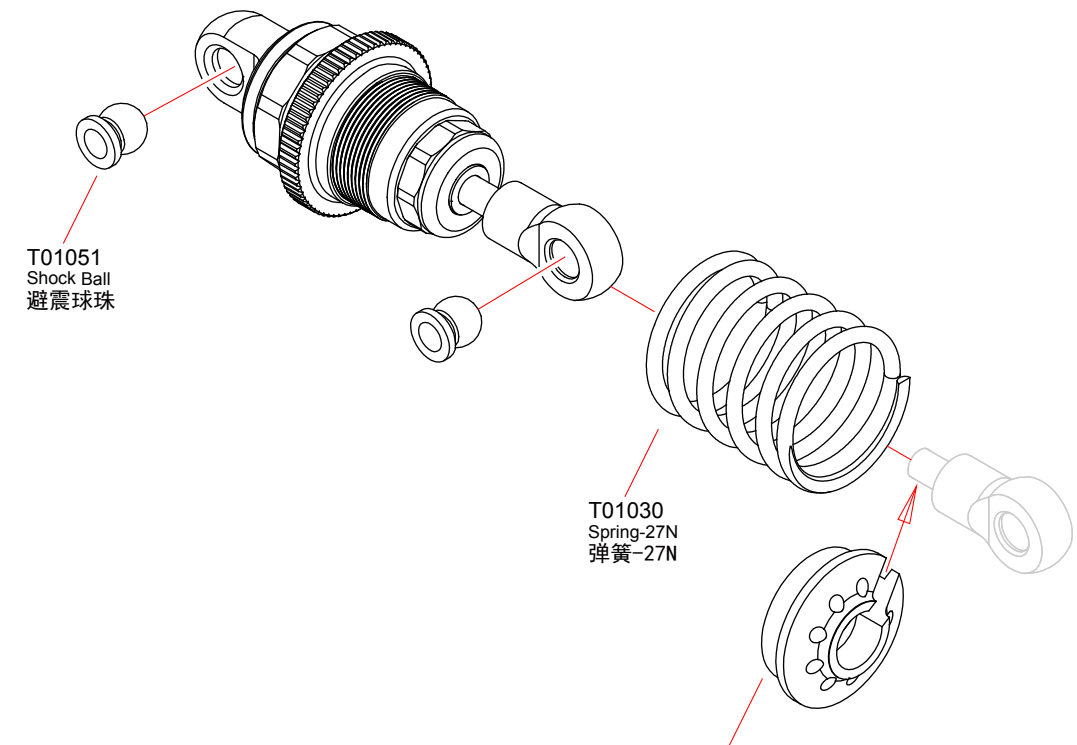


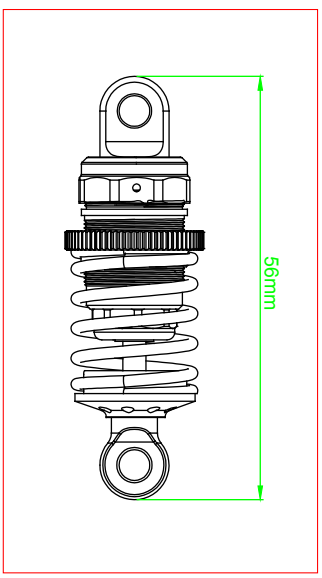


T01051 Shock Ball
避震球珠

.....8

x4 Assemble as many times as specified
需組裝數量

## 40 Front Bumper Set 前防撞组 Bag-H

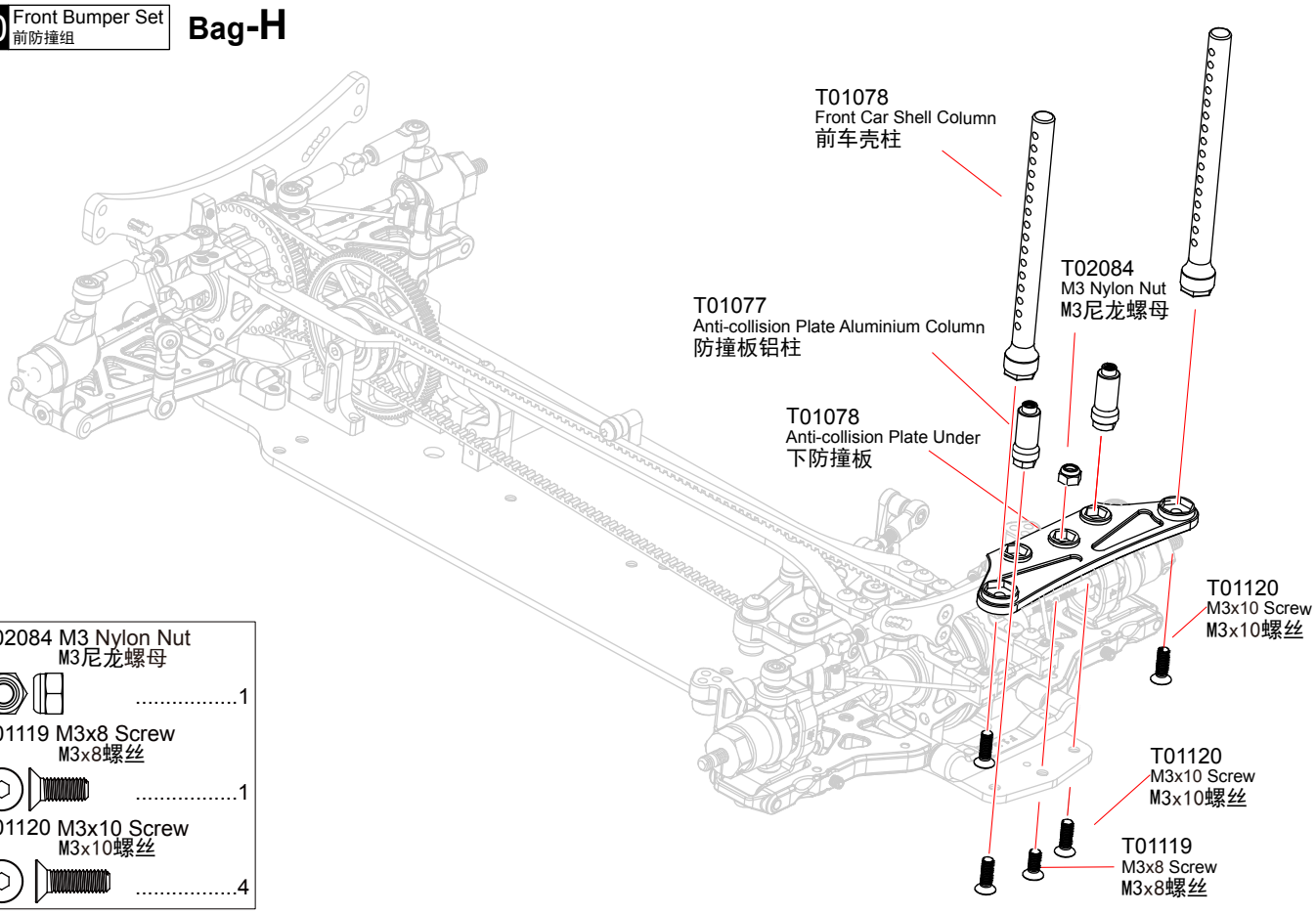


T02084 M3 Nylon Nut
M3尼龙螺母 .....1

T01119 M3x8 Screw
M3x8螺丝 .....1

T01120 M3x10 Screw
M3x10螺丝 .....4

## 41 Front Bumper Set 前防撞组 Bag-H

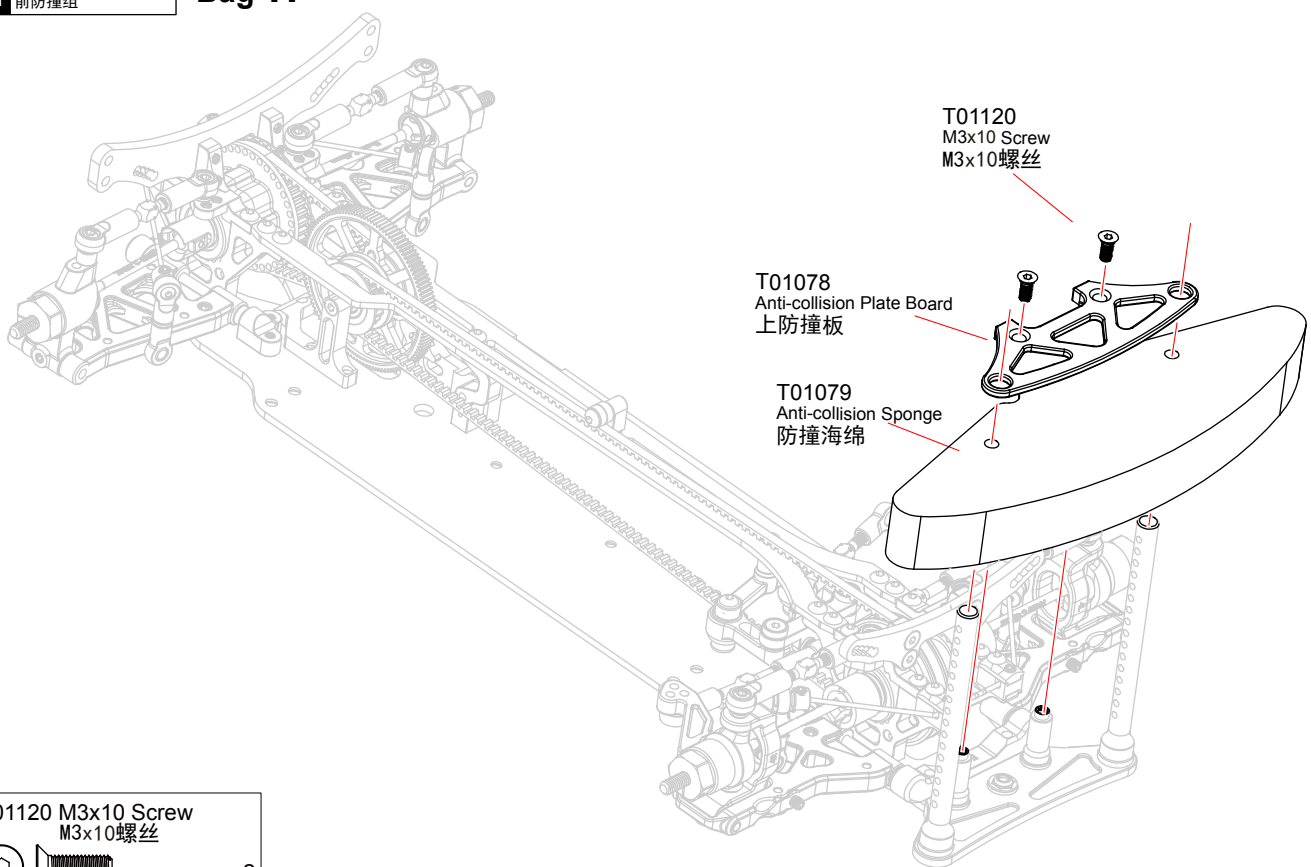


T01120 M3x10 Screw
M3x10螺丝 .....2

## 42 Front Body Mount 前车壳柱 Bag-H

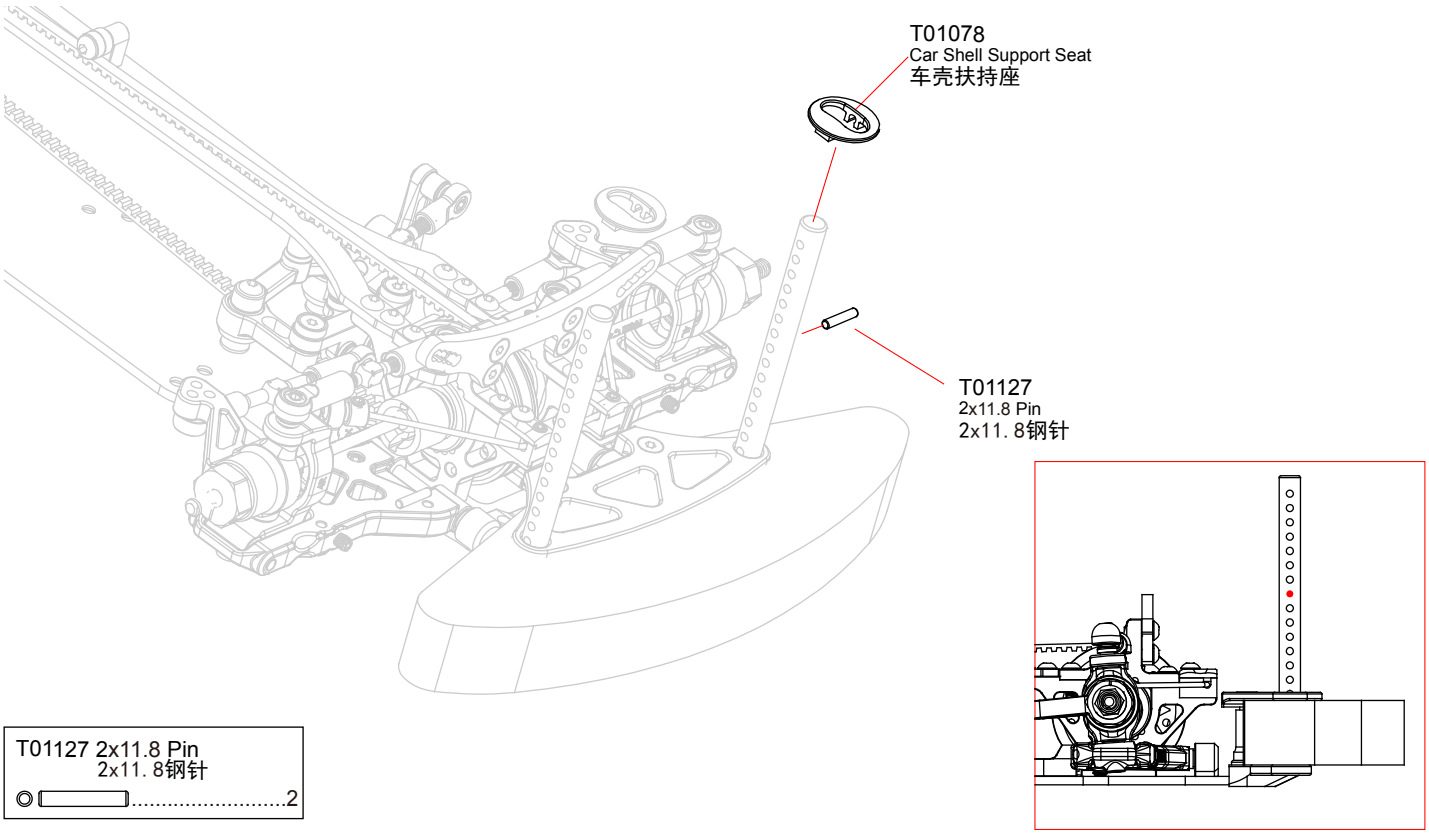


T01127 2x11.8 Pin
2x11. 8钢针
.....2

## 43 Front Shock Absorber 前避震器 Bag-H

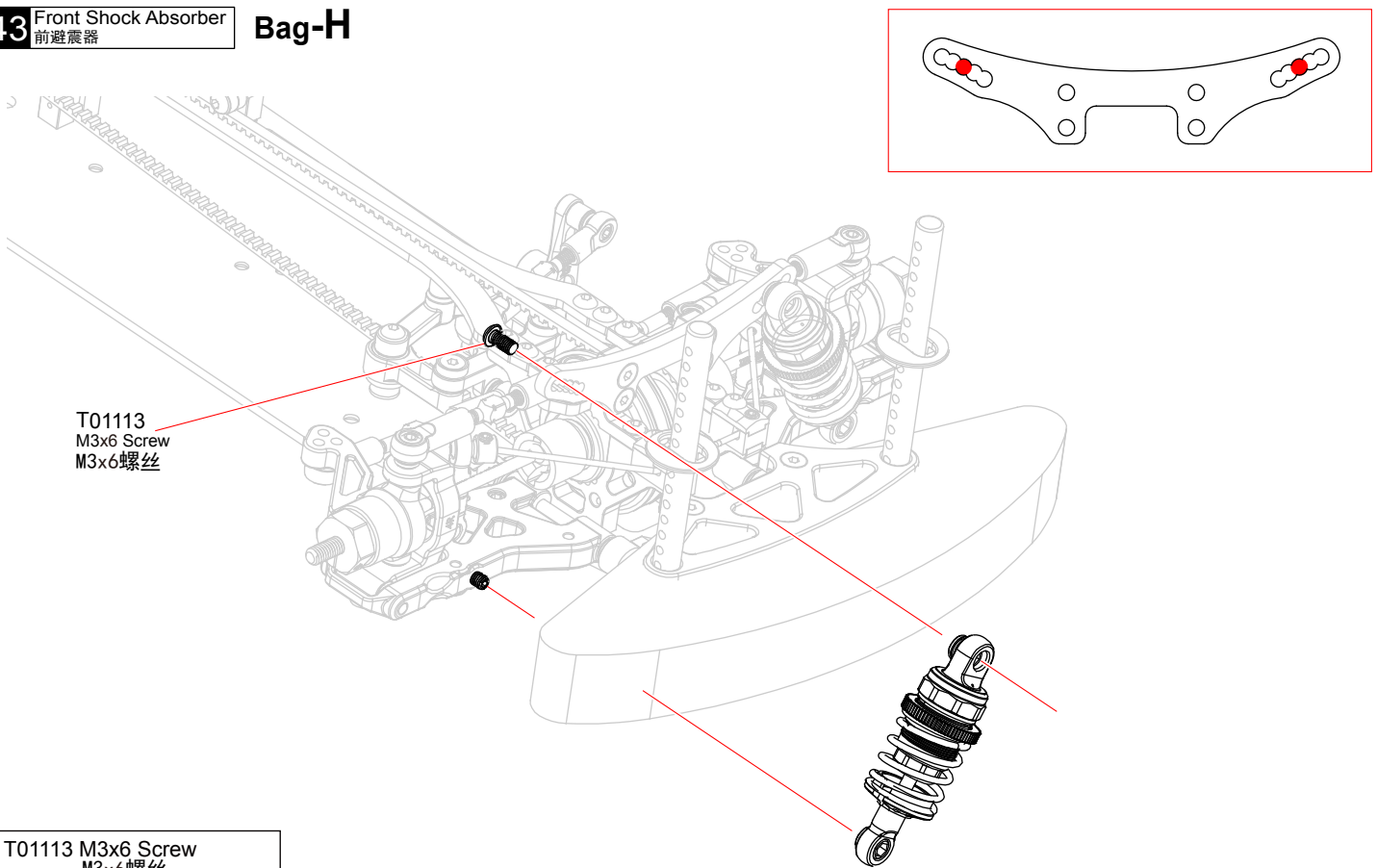


T01113 M3x6 Screw
M3x6螺丝
.....2

L/R Assemble both Left and Right
組裝左和右

## 44 Rear Body Mount 后车壳柱 Bag-H

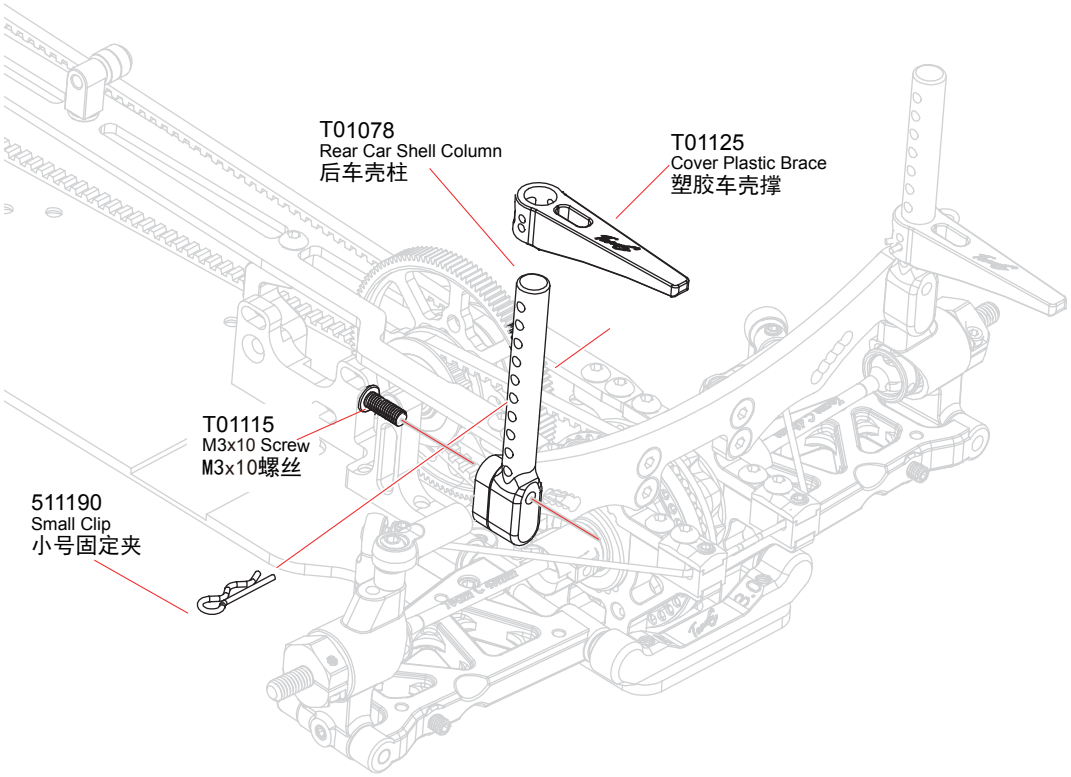


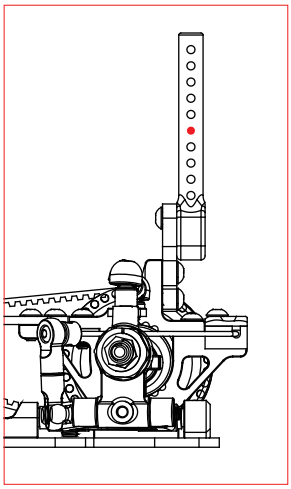

T01115 M3x10 Screw
M3x10螺丝 .....2

511190 Small Clip
小号固定夹 .....2

## 45 Rear Shock Absorber 后避震器 Bag-H

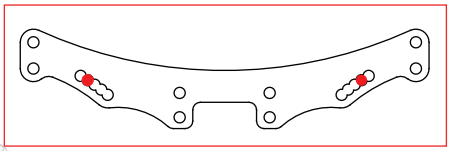

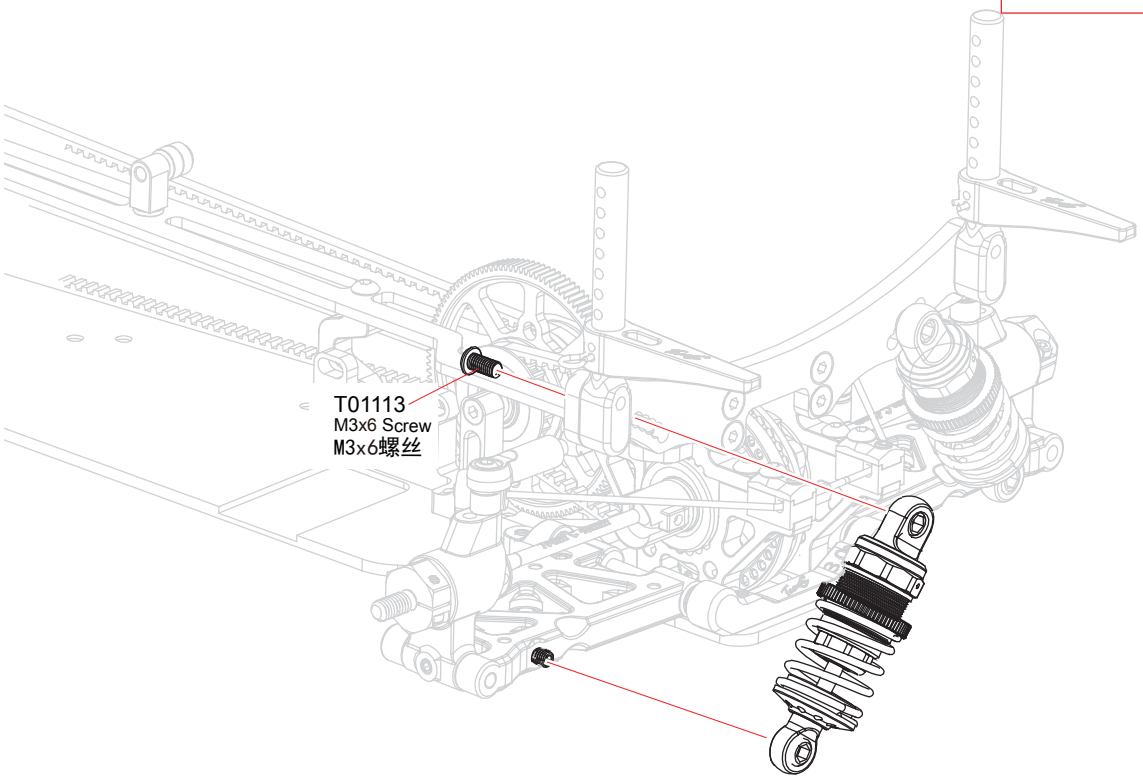


T01113 M3x6 Screw
M3x6螺丝 .....2

L/R Assemble Both Left And Right
组装左和右

## 46 Steering Servo 转向伺服系统 Bag-I

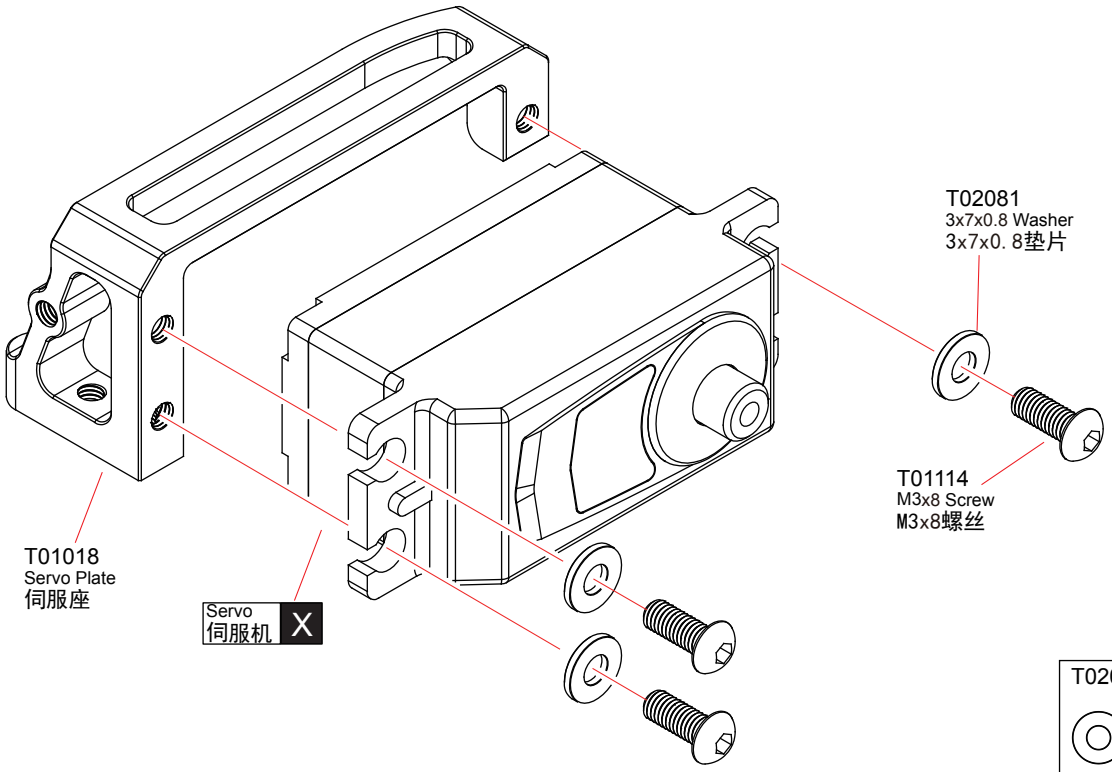


T02081 3x7x0.8 Washer
3x7x0. 8垫片 .....3

T01114 M3x8 Screw
M3x8螺丝 .....3

## 47 Steering Servo 转向伺服系统 Bag-I

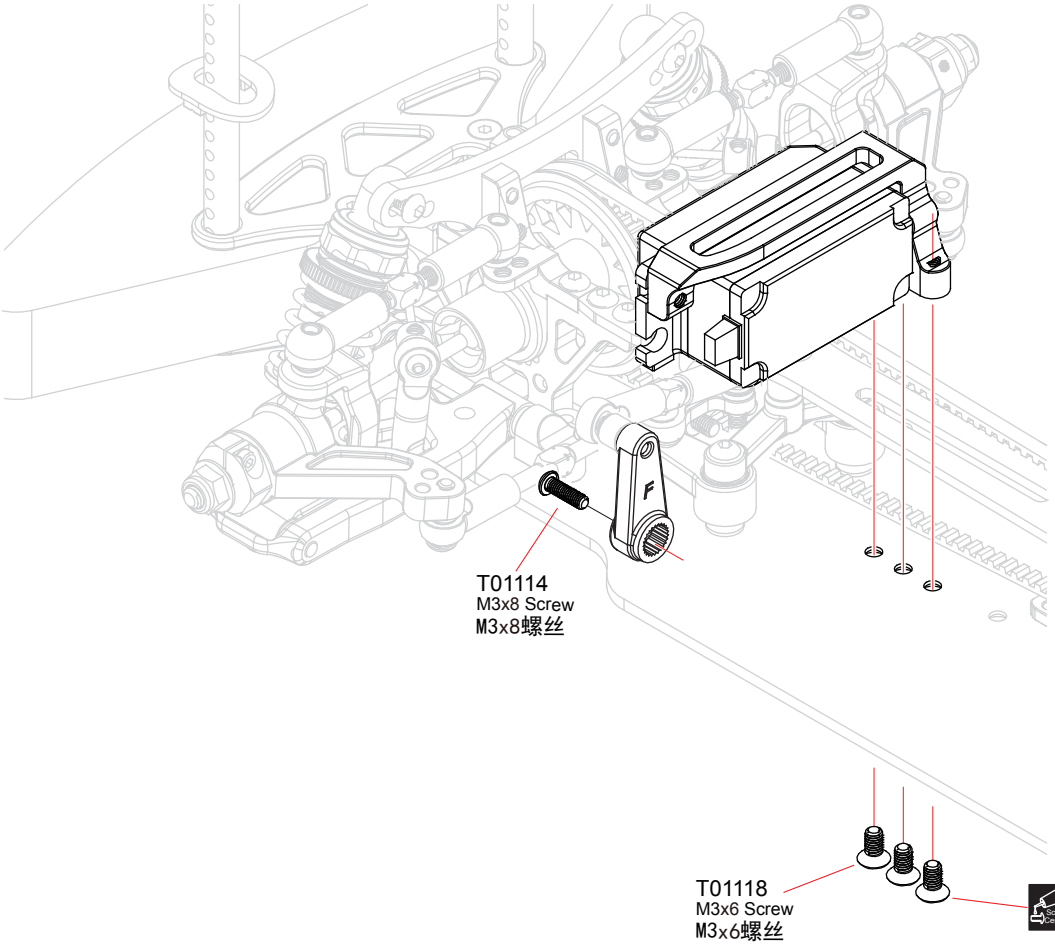


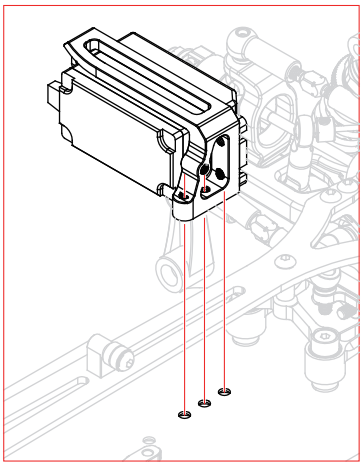

T01114 M3x8 Screw
M3x8螺丝 .....1

T01118 M3x6 Screw
M3x6螺丝 .....3

X Must be purchased separately
需另購物品

## 48 Motor 马达 Bag-I

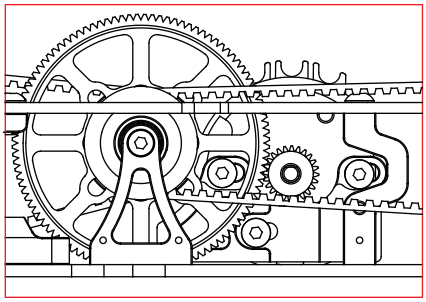

T01114
M3x8 Screw
M3x8螺丝

T01122
M3x3 Screw
M3x3螺丝

Motor 马达 X

Motor Gear 马达齿 X

T01122 M3x3 Screw
M3x3螺丝
.....1

T01114 M3x8 Screw
M3x8螺丝
.....3

## 49 ESC/Receiver 电子变速器/接收机 Bag-I

T02087
Anetenna Pipe
天线套管

T01078
Anetenna Socket
天线管座

Receiver 接收机 X

ESC 电子变速器 X

T02087
Double-sided Tape
双面胶

T01118
M3x6 Screw
M3x6螺丝

T01118 M3x6 Screw
M3x6螺絲
.....2

X Must be purchased separately
需另購物品

## 50 Frame 电池架 Bag-I

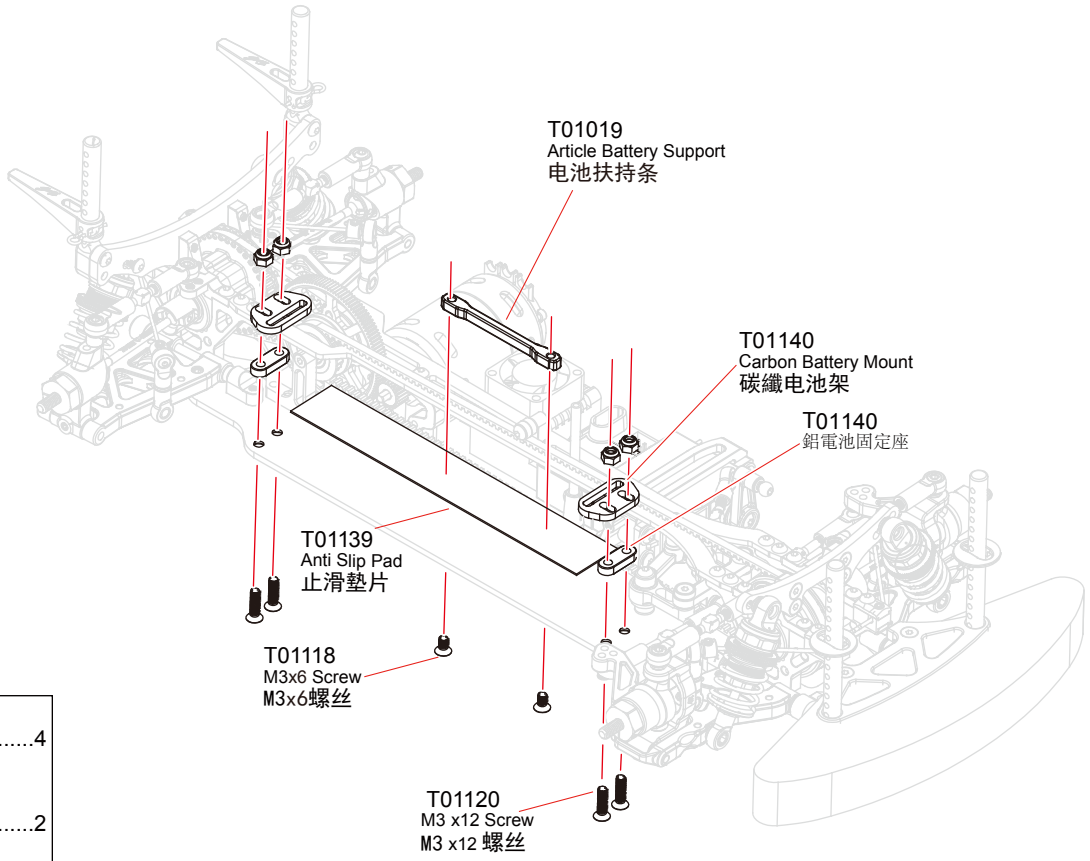


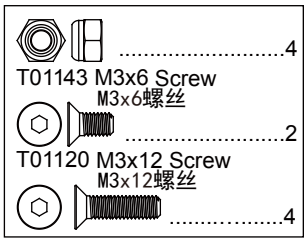


## 51 Battery/Tyre 电池/轮胎 Bag-I

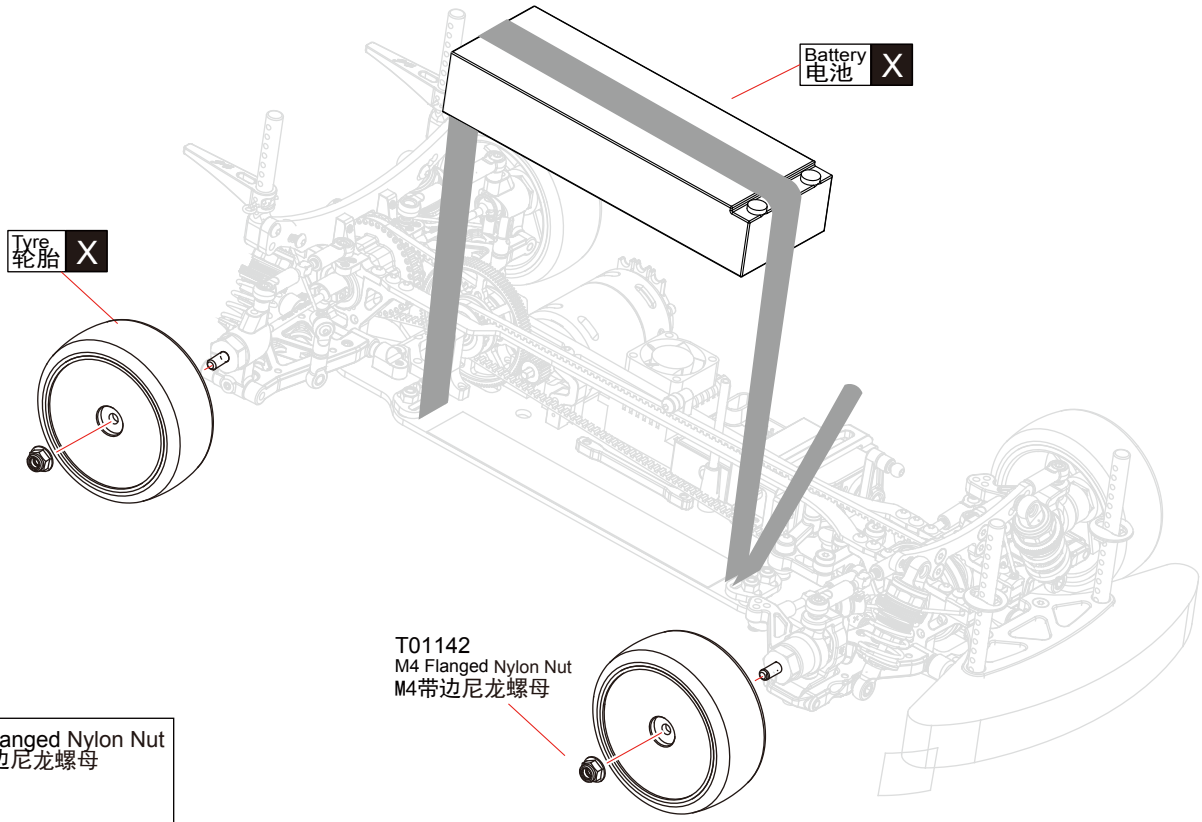


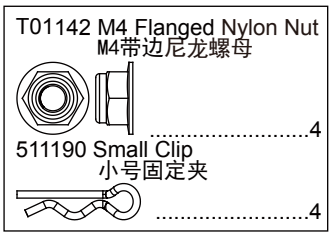


L/R Assemble Both Left And Right
组装左和右

X Must be purchased separately
需另購物品

# Exploded View
# 爆炸圖

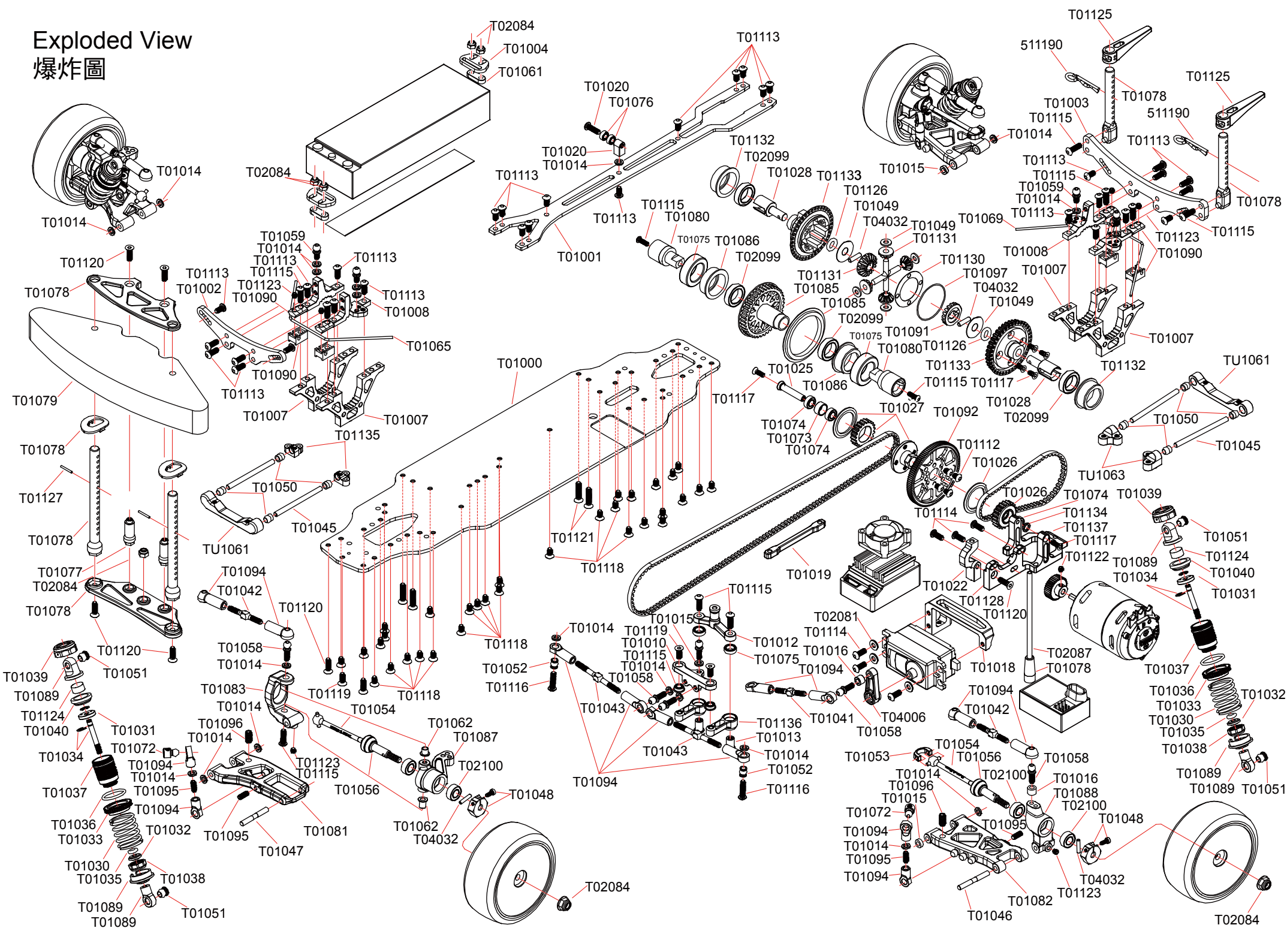

# Parts list for TC10 1/10 Touring Car - 1　TC10配件包-1

## T01000

Main Chassis
主底盘 1pcs

## T01001
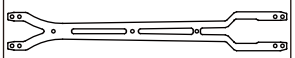
Top Deck
二楼板 1pcs

## T01002
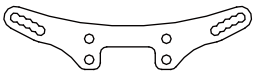
Front Shock Tower
前避震器架 1pcs

## T01003
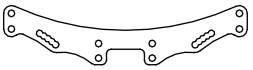
Rear Shock Tower
后避震器架 1pcs

## T01135
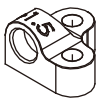
Project seat 1.5 (R)
投影座+1.5 1pcs
Project seat 1.5 (L)
投影座+1.5 1pcs

## T01134

Arm Mount F1.5
摆臂固定座 F1.5 1pcs

## T01006
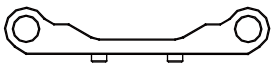
Arm Mount-R3.0
摆臂固定座-R3.0 1pcs

## T01007
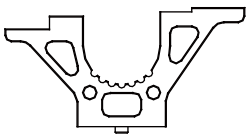
Side Panel
侧板 2pcs

## T01008
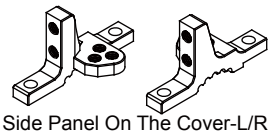
Side Panel On The Cover-L/R
侧板上盖-L/R 2pcs

## TU1063
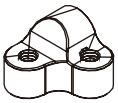
Project seat 1.5 (R)
投影座+1.5 1pcs
Project seat 1.5 (L)
投影座+1.5 1pcs

## T01010
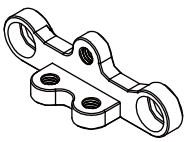
Steering Board
转向板 1pcs

## T01136
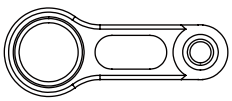
Servo Saver
缓冲臂 2pcs

## T01012
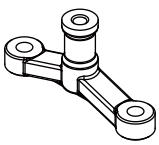
Reinforcing Bar Before
前补强柱 1pcs

## T01013
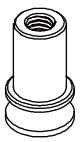
Buffer Bolumn
缓冲柱 2pcs

## T01014

3x5.5x1 Washer
垫片 6pcs

## T01015

3x5.5x2 Washer
垫片 6pcs

## T01016

3x5.5x4 Washer
垫片 6pcs

## T01017

4x6x1.5 Washer
垫片 2pcs

## T01018
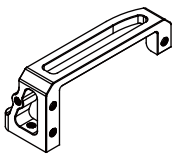
Servo Plate
伺服座 1pcs

## T01019
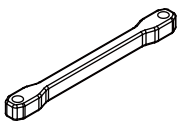
Article Battery Support
电池扶持条 1pcs

## T01020

3x6x2.5 Ball Bearing
轴承 2pcs
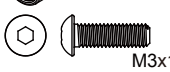
M3x10 Screw
M3x10螺丝 1pcs

Pressure Wheel Seat Belt
皮带压轮座 1pcs

## T01137
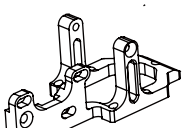
One piece motor mount
一體式馬達座 1pcs

## T01022
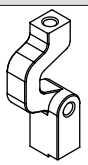
Motor Mount-B
马达座-B 1pcs

## T01135
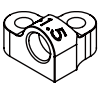
Project Seat R 1pcs

Project Seat L 1pcs

## T01025
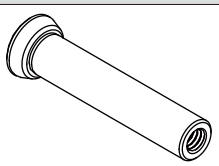
Axis
中轴 1pcs

## T01026
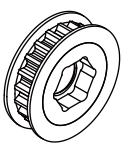
Pulley-20T
皮带轮-20T 1pcs

## T01027
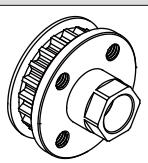
Belt Wheel-20T
皮带轮轴-20T 1pcs

## T01028
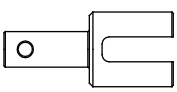
Aluminum Diff Connecting Cup
铝差速接杯 2pcs

## T01029

Shock
避震器 2pcs

## T01030
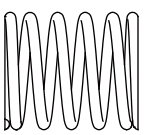
Spring-27N
弹簧-27N 2pcs

## T01031
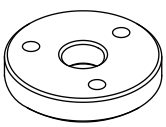
Shock Piston
避震器活塞 2pcs

## T01032
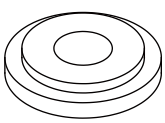
Suspension Bushings
避震轴套 2pcs

## T01033

Spring Adjuster
避震调整环 2pcs

## T01034

2.3 E-ring
2.3 E扣 4pcs
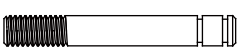
Shock Absorber Shaft
避震轴 2pcs

## T01035

2.8x1.9 O-ring
2.8x1.9 O环 8pcs

# Parts list for TC10 1/10 Touring Car - 2　TC10配件包-2

## T01036
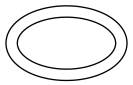
13x1.5 O-ring
13x1.5 0环 4pcs

## T01037

Shock Absorber Body
避震器筒身 2pcs

## T01038
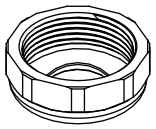
Shock Below Cover
避震下盖 2pcs

## T01039
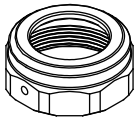
Shock Upper Cover
避震上盖 2pcs

## T01040
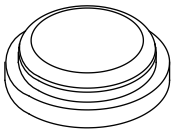
Diaphragm
气室 4pcs

## T01041
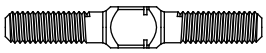
3x25 Turnbuckle
3x25拉杆 2pcs

## T01042
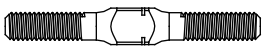
3x28 Turnbuckle
3x28拉杆 2pcs

## T01043
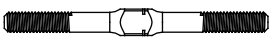
3x40 Turnbuckle
3x40拉杆 2pcs

## T01044
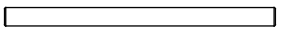
Rear Arm Pin-44mm
后摆臂轴-44mm 2pcs

## T01045
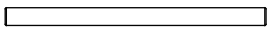
Front Arm Pin-41mm
前摆臂轴-41mm 2pcs

## T01046
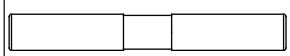
25mm Arm PIN
25mm摆臂轴 2pcs

## T01047
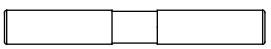
23mm Arm PIN
23mm摆臂轴 2pcs

## T01048
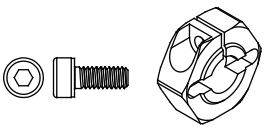
2x5 Screw
螺丝 4pcs

Hex Mount
六角座 4pcs

## T01049

5x15x0.3 Washer
垫片 2pcs

3.5x10x0.3 Washer
垫片 4pcs

## T01050
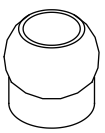
Arm Mount-Ball
摆臂球珠 4pcs

## T01051
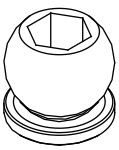
Shock Ball
避震球珠 4pcs

## T01052

4.9x5.5 Ball Stud
球头 4pcs

## T04022
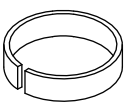
Spring Buckle
弹簧扣 1pcs

## T01053
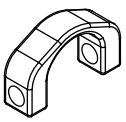
Horseshoe
马蹄 4pcs

## T01054

43mm Drive Shaft
传动轴 2pcs

## T01055

44mm Drive Shaft
传动轴 2pcs

## T01056
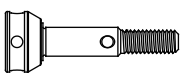
CVD Connecting Cup
CVD接杯 2pcs

## T01057

2x9.8 pin
钢针 4pcs

CVD Shaft
CVD轴 4pcs

## T01058
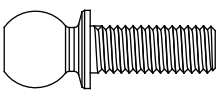
Ball Stud-Long
球头-长 6pcs

## T01059
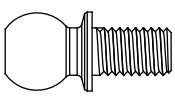
Ball Stud-Short
球头-短 4pcs

## T01060
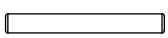
2.5x21 Pin
钢针 2pcs

## T01061
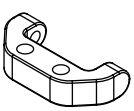
Frame
电池架 2pcs

## T01062

3x4x4.2 Steering Arm Sleeves
3x4x4. 2 转向臂轴套 2pcs

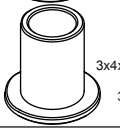
3x4x5.8 Steering Arm Sleeves
3x4x5. 8 转向臂轴套 2pcs

## T01064
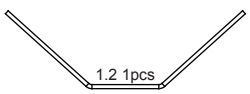

Front Swaybar
前防倾杆 1pcs

## T01065
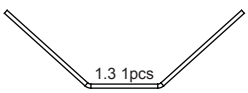

Front Swaybar
前防倾杆 1pcs

## T01066
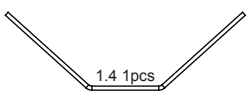

Front Swaybar
前防倾杆 1pcs

## T01067
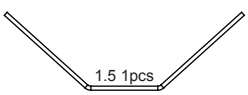

Front Swaybar
前防倾杆 1pcs

## T01068
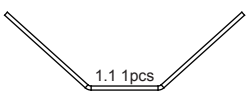

Rear Swaybar
后防倾杆 1pcs

## T01069
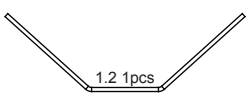

Rear Swaybar
后防倾杆 1pcs

## T01070
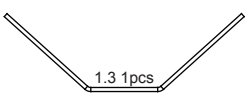

Rear Swaybar
后防倾杆 1pcs

# Parts list for TC10 1/10 Touring Car - 3　TC10配件包-3

## T01071

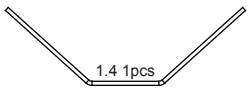


Rear Swaybar
后防倾杆 1pcs

## T01072

M3x3 Screw
螺丝 2pcs

Swaybar Ball Stud
防倾杆球头 2pcs

## T01073

3.5mm Casing
3.5mm 套管 1pcs

## T01142

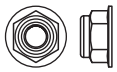

Aluminum Flange
M4 Locknut
带边铝尼龙螺母
4pcs

## T04032

2x9.8 Pin
钢针 6pcs

## T01074

4x8x3 Ball Bearing
轴承 6pcs

## T02080

3x6x2.5 Ball Bearing
轴承 4pcs

## T01075

5x8x2.5 Ball Bearing
轴承 6pcs

## T02100

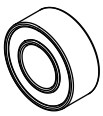

5x10x4 Ball Bearing
轴承 6pcs

## T02099

10x15x4 Ball Bearing
轴承 6pcs

## T01076

3x6x2.5 Ball Bearing
轴承 6pcs

## T01077

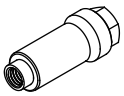

Anti-collision Plate Aluminium Column
防撞板铝柱 2pcs

## T01078

Antenna Socket
天线管座 1pcs

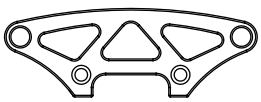

Anti-collision Plate Board
上防撞板 1pcs

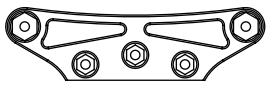

Anti-collision Plate Under
下防撞板 1pcs

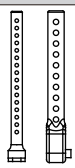

Front Car Shell Column
前车壳柱 2pcs

Rront Car Shell Column
后车壳柱 2pcs

Car Shell Support Seat
车壳扶持座 4pcs

## T01079

Anti-collision Sponge
防撞海绵 1pcs

## T01080

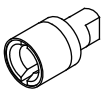

Diff Connecting Cup
差速接杯 2pcs

## T01081

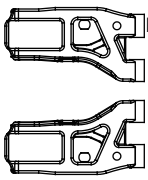


Front Lower Arm
前下摆臂

## T01082

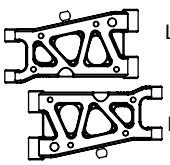


Rear Lower Arm
后下摆臂

## T01083

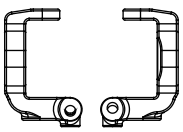

C-type Holder-L　C-type Holder-R
C型座-L 1pcs　C型座-R 1pcs

## T01133

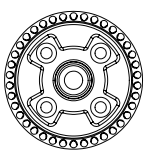

Differential Belt Tooth-38T
差速皮带齿-38T 1pcs

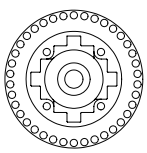

Differential Shell
差速壳 1pcs

## T01085

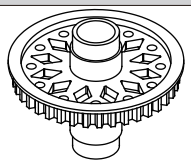

Plastic Straight Shaft
塑胶直轴 1pcs

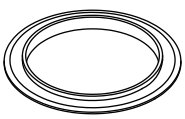

Straight Shaft Gear Ring
直轴齿轮环 1pcs

## T01132

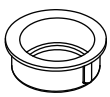

Belt Adjustment Ring
皮带调整环 4pcs

## T01087

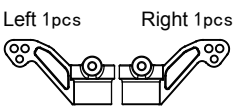


Steering Arm
转向臂 2pcs

## T01088

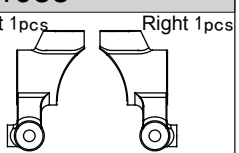


Rear Hub
后轮座 2pcs

## T01089

Shock Absorber Cover
避震器盖 2pcs

Blow Sping Mount End
弹簧下座 2pcs

Ball End
球头 2pcs

## T01090

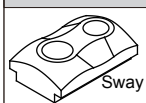

Sway Bar Holder Broad
防倾杆上座 2pcs

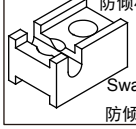

Sway Bar Holder Under
防倾杆下座 2pcs

## T01131

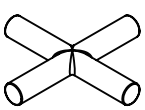

With Poor Spider
差速十字轴 1pcs

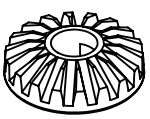

Diff Gear-18T
差速伞齿-18T 2pcs

Diff Gear-10T
差速内齿-10T 4pcs

## T01092

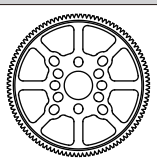

Mid Gear-118T
中齿轮-118T 1pcs

## T02087

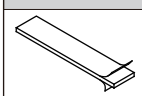

Double-sided Tape
双面胶 1pcs

Antenna pipe set cover
天线管帽 1pcs



Antenna pipe set
天线套管 1pcs

## T01093

2.3 E-ring
2.3 E扣 10pcs

# Parts list for TC10 1/10 Touring Car - 4　TC10配件包-4

## T01094

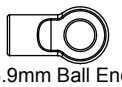

4.9mm Ball End-Short
4. 9mm球头座-短 10pcs

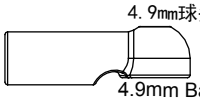

4.9mm Ball End
4. 9mm球头座 8pcs

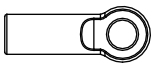

4.9mm Ball End-Long
4. 9mm球头座-长 4pcs

## T01095

M3x8 Screw
螺丝 10pcs

## T01096

M4x8 Screw
螺丝 10pcs

## T01130

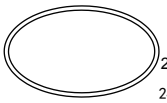

24x0.7 O-ring
24x0. 7 0环 4pcs

Diff Leakproof Spacer
差速防漏垫片 1pcs

## T01139

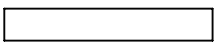

Anti-slip Pad
止滑垫 1pcs

## T01099

Belt
皮带 1pcs

## T01100

Small Belt
小皮带 1pcs

## 511190

Small Clip
小号固定夹 10pcs

## T01112

M3x4 Screw
螺丝 10pcs

## T01113

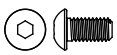

M3x6 Screw
螺丝 10pcs

## T01114

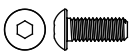

M3x8 Screw
螺丝 10pcs

## T01115

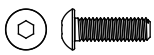

M3x10 Screw
螺丝 10pcs

## T01116

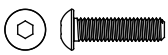

M3x12 Screw
螺丝 10pcs

## T01117

M2.5x8 Screw
螺丝 10pcs

## T01118

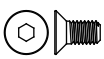

M3x6 Screw
螺丝 10pcs

## T01119

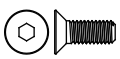

M3x8 Screw
螺丝 10pcs

## T01120

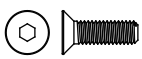

M3x10 Screw
螺丝 10pcs

## T01121

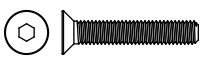

M3x18 Screw
螺丝 10pcs

## T01122

M3x3 Screw
螺丝 10pcs

## T01123

M3x4 Screw
螺丝 10pcs

## T01124

8x2 Shock Absorber Sponge
8x2避震器海绵 4pcs

## T01125

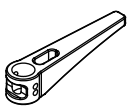

Cover Plastic Brace
塑胶车壳撑 2pcs

## T04006

1pcs　1pcs　1pcs

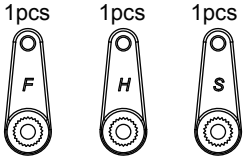


Steering Servo Horn
转向伺服臂 1pcs

## T02081

3x7x 0.8 Washer
垫片 10pcs

## T01126

5x1.9 O-ring
5x1. 9 0环 4pcs

## T01127

2x11.8 Pin
钢针 6pcs

## T01140

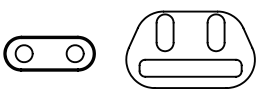

Adjustable Battery Holder Mount
可調式電池固定座 1 pcs

## T01143

M3 Nylon Nut
尼龙螺母 6pcs

# TC10

| | |
|---|---|
| RACE | |
| TRACK | |

| | |
|---|---|
| NAME | |
| CITY/COUNTRY | |
| CONTACT | |

| DATE | AIR TEMP | TRACK TEMP | HUMIDITY |
|---|---|---|---|
| | | | |

| QUALIFYING POSITION | BEST LAPTIME/sex |
|---|---|
| | |

| FINAL POSITION | RACE LENGTH/minutes |
|---|---|
| | |

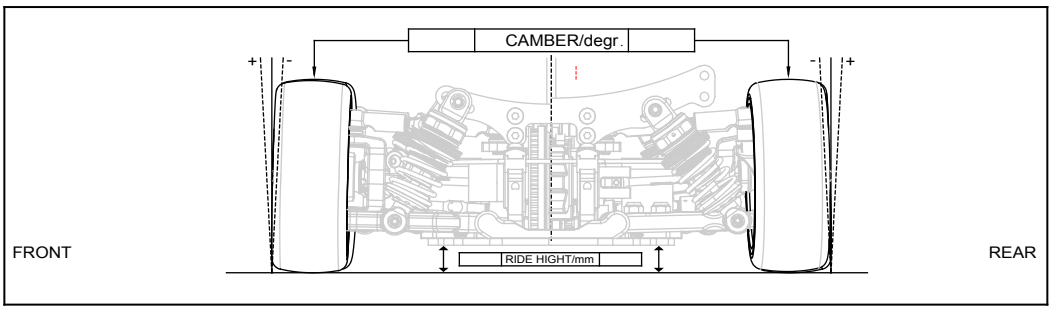


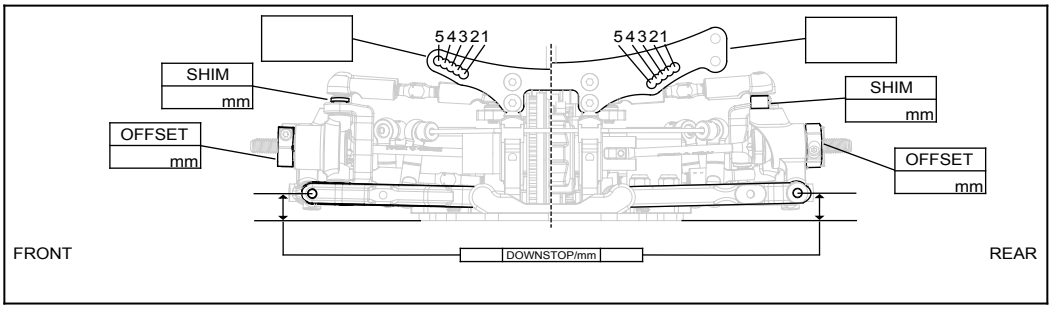


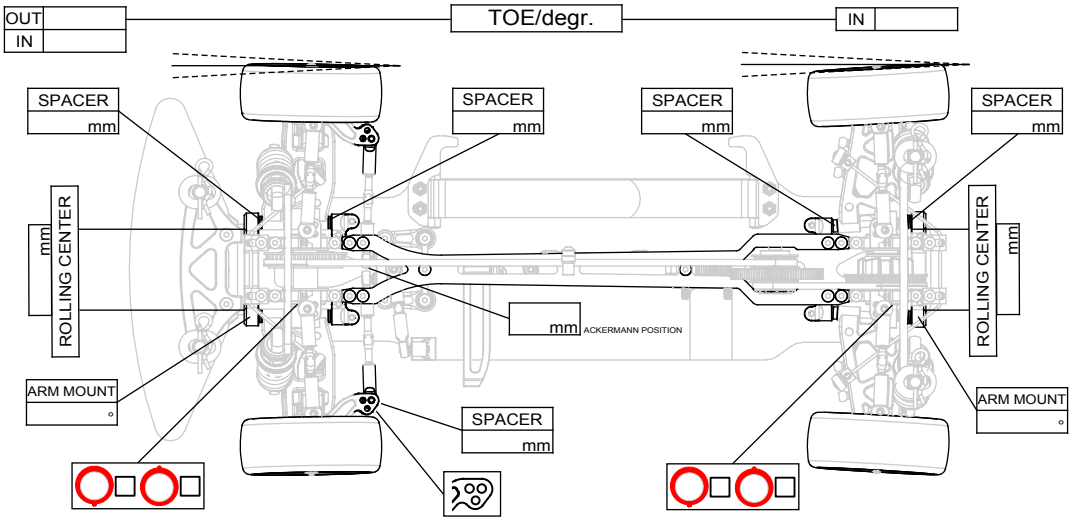


TOTAL WEIGHT

Total Weight With Car Body _____g

○ SCREW NOT USED
● SCREW USED

## SHOCKS

| FRONT | | REAR |
|---|---|---|
| | | |
| | SPRING | |
| | OIL/W | |
| | LENGTH/mm | |
| | REBOUND/% | |
| ☐YES ☐NO | FOAM INSERTS | ☐YES ☐NO |
| | HOLES IN PISTON | |

| | | | |
|---|---|---|---|
| TRACK CONDITION | ☐CONCRETE ☐TECHNICAL | ☐CARPET ☐MIXED | ☐ASPHALT ☐FAST |
| TRACTION | ☐LOW | ☐MEDIUM | ☐HIGH |

| | |
|---|---|
| ESC | BATTERIES |
| BODY | WING |

| ARMATURE | | TIMING | |
|---|---|---|---|
| | | | |
| MOTOR | | | |
| FINAL GEAR RATIO | | | |

| PINION/T | SPUR GEAR/T |
|---|---|
| T | T |

TRANSMISSION

| FRONT | REAR |
|---|---|
| ☐ GEAR DIFFERENTIAL | ☐ |
| W DIFFERENTIAL | W |
| ONE WAY DIFFERENTIAL ☐ | SOLID AXLE ☐ |

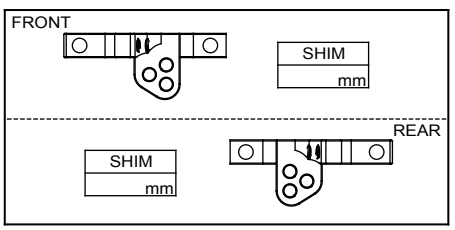


| | | |
|---|---|---|
| | TIRES | |
| | DIAMETER | |
| | INSERTS | |
| | ADDITIVE | |

ANTI-ROLL BAR

| FRONT | REAR |
|---|---|
| ☐ 1.2 | ☐ 1.1 |
| ☐ 1.3 | ☐ 1.2 |
| ☐ 1.4 | ☐ 1.3 |
| ☐ 1.5 | ☐ 1.4 |

TREATED AREA

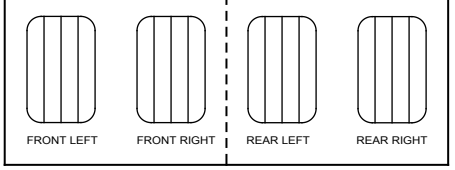


COMMENTS

www.teamcracing.net