www.teamcracing.net

TM2 SC

Instruction manual

1:10 SCALE RADIO CONTROLLED ELECTRIC POWERED 2WD RACING BUGGY

Dimensions 尺寸:

Length 長度.....380mm

Width 寬度.....250mm

Height 高度.....150mm

Transmitter Preparation
調整遙控器

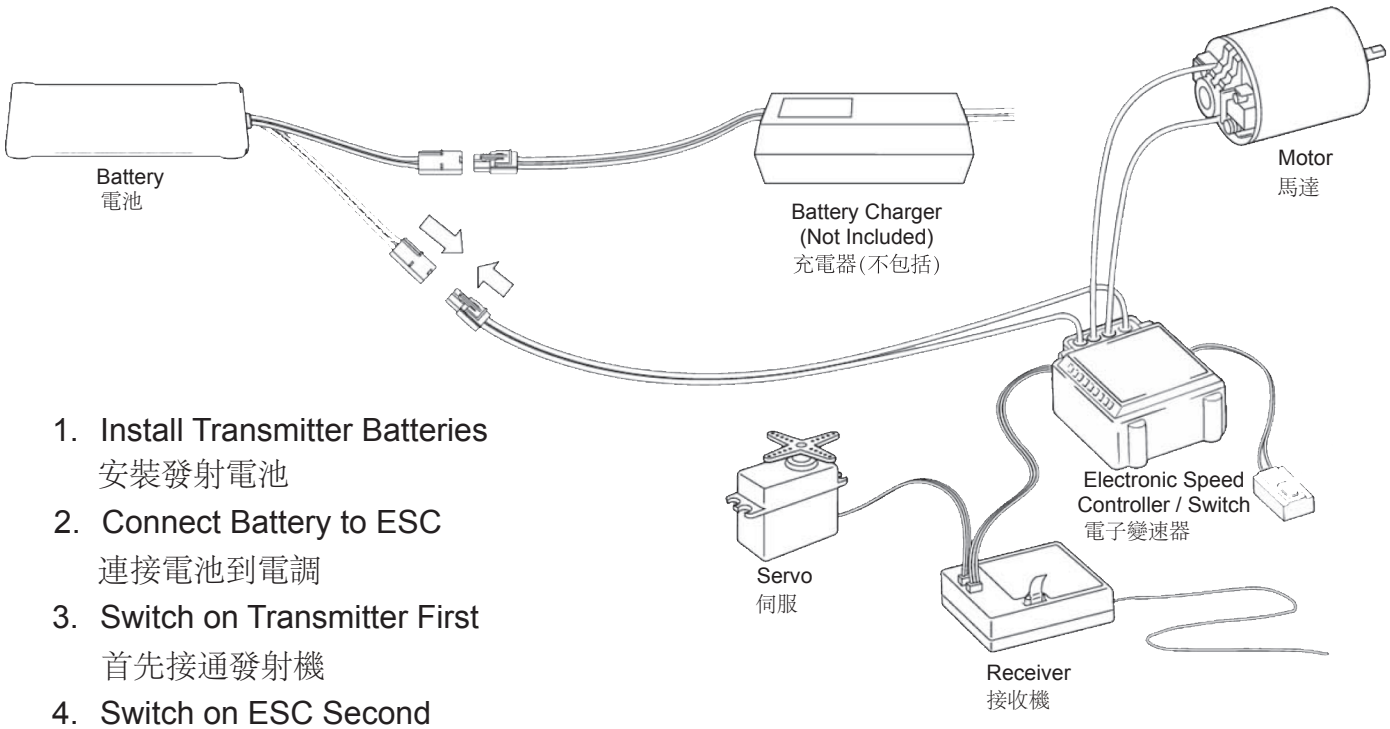

1. Install Transmitter Batteries
   安裝發射電池
2. Connect Battery to ESC
   連接電池到電調
3. Switch on Transmitter First
   首先接通發射機
4. Switch on ESC Second
   其次接通電調

Note: When done driving Turn Off the ESC and THEN Transmitter

注意:當停止駕駛首先要關掉電調
其次再關掉發射機

Tools required
組裝需要的工具

- Needie Nose Pllers
  尖嘴鉗

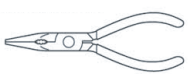

- Awl
  錐

- Grease
  潤滑油

- Screw Cement
  螺絲膠水

- ***H162***
  Instant Glue
  瞬間膠水

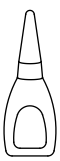

- Differential Grease
  差速油

- Molybdenum Grease(Black)
  鉬油(黑)

- ***H154***
  Body Reamer
  車殼絞刀

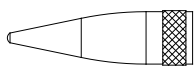

No need to pre-drill precise holes
(1mm to 15mm)can be drilled
可以對預鑽的孔準確地鑽1mm-15mm

- Wire Cutters
  鋼絲鉗

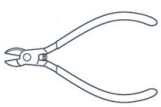

- ***H096***
  ROUND CUTTER
  剪刀

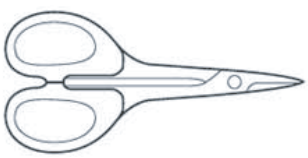

- Hex Wrench
  六角扳手

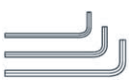

- Hex Wrench
  十字套筒

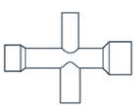

- Sharp Hobby knife
  美工刀

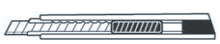

For trimming bodies!
用于修剪車殼!

1 Front Suspension 前懸吊系統

F/R **Bag-A**

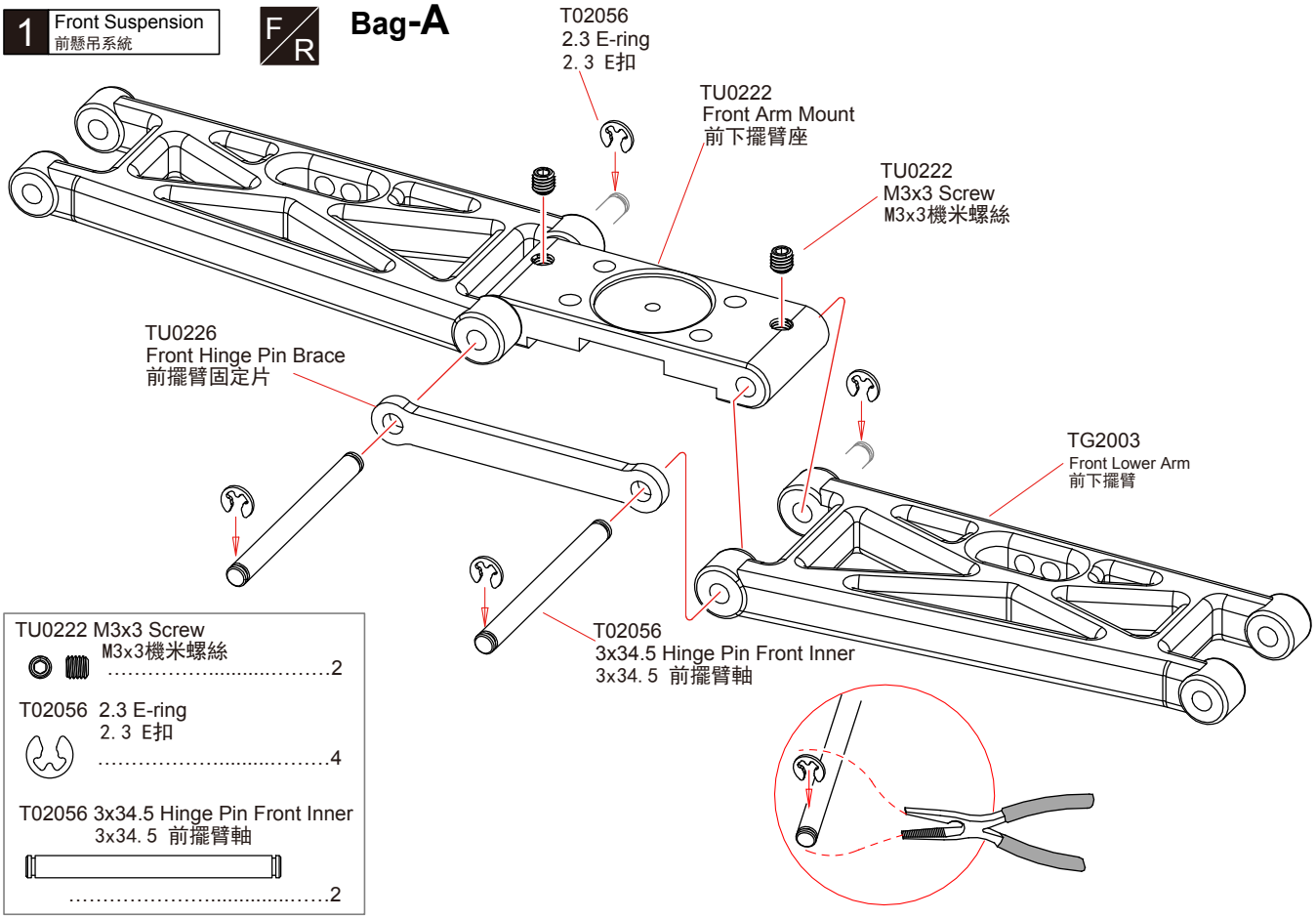

TU0222 M3x3 Screw
M3x3機米螺絲 2

T02056 2.3 E-ring
2. 3 E扣 4

T02056 3x34.5 Hinge Pin Front Inner
3x34. 5 前擺臂軸
.....2

2 Front Suspension 前懸吊系統

Bag-A

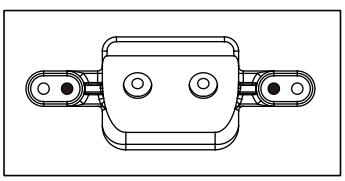

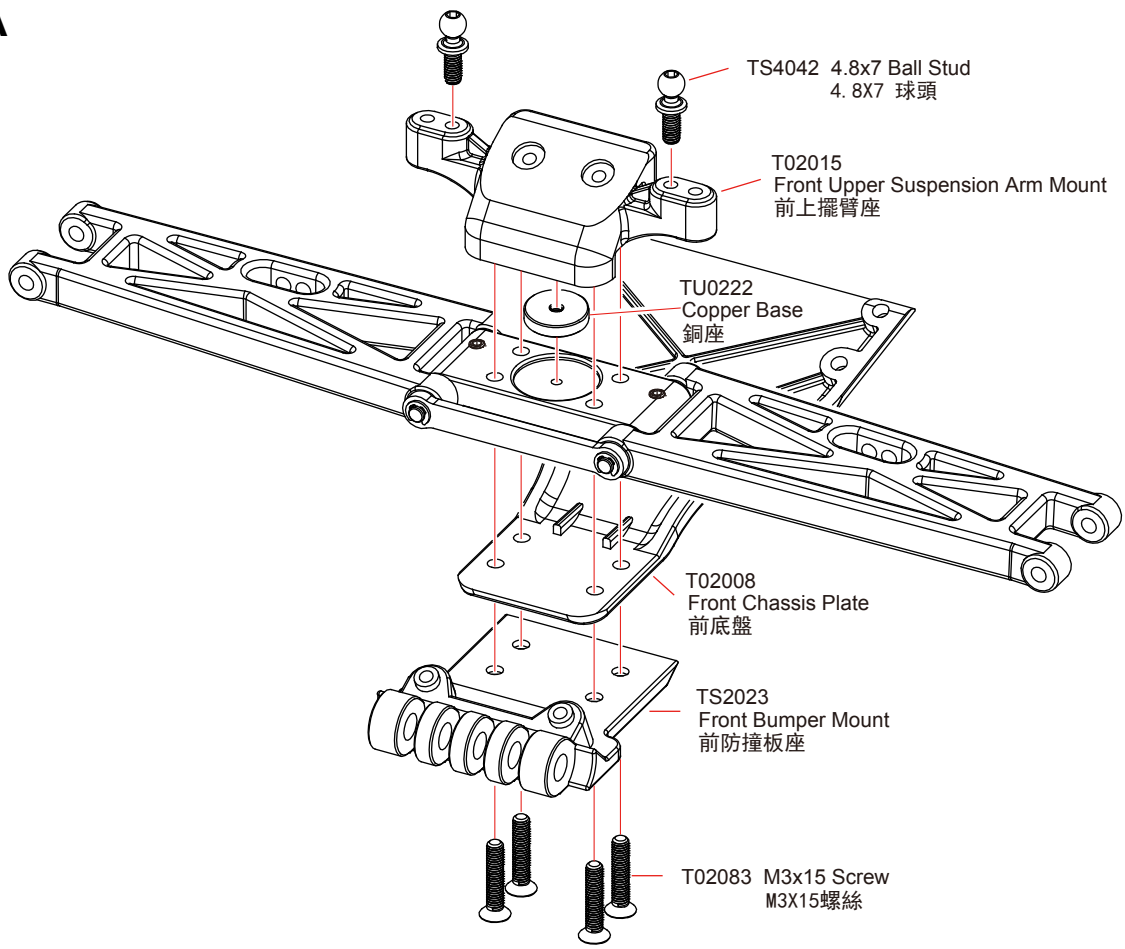

T02083 M3x15 Screw
螺絲 4

TS4042 4.8x7 Ball stud
球頭 2

L/R Assemble both Left and Right
組裝左和右

3 Buffer 緩沖

Bag-A

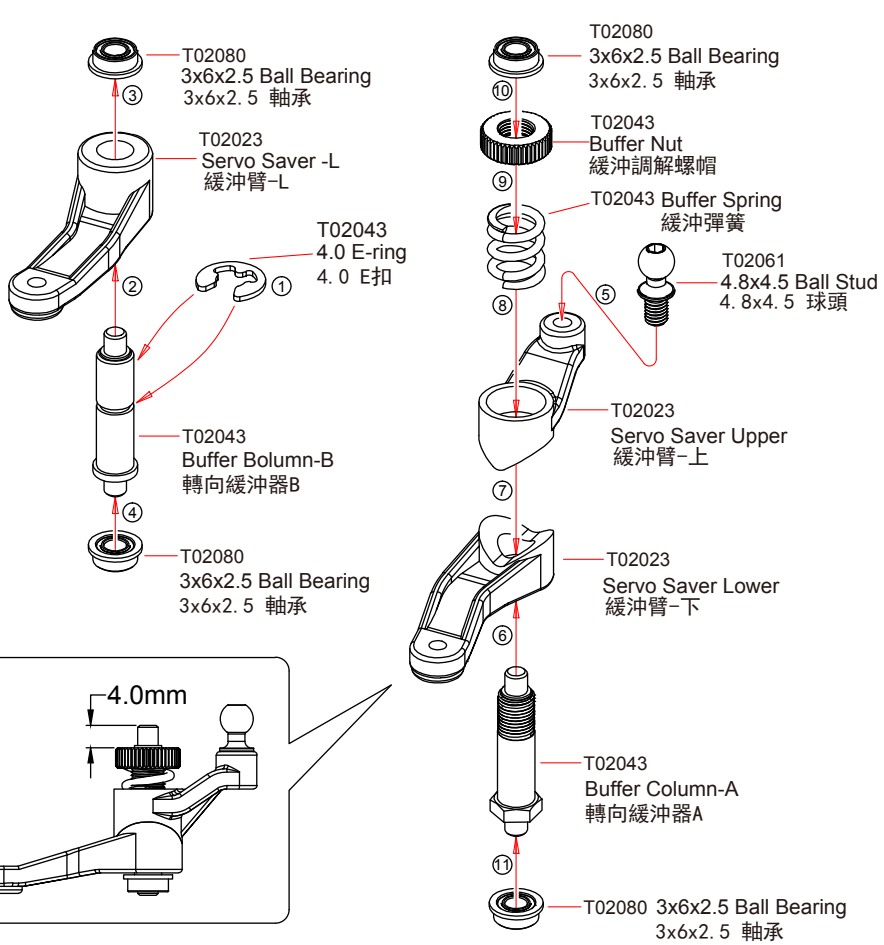

T02043 4.0 E-ring
E 扣 1

T02080 3x6x2.5 Ball Bearing
軸承 4

T02061 4.8x4.5 Ball stud
球頭 1

4 Buffer 緩沖

Bag-A

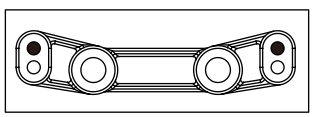

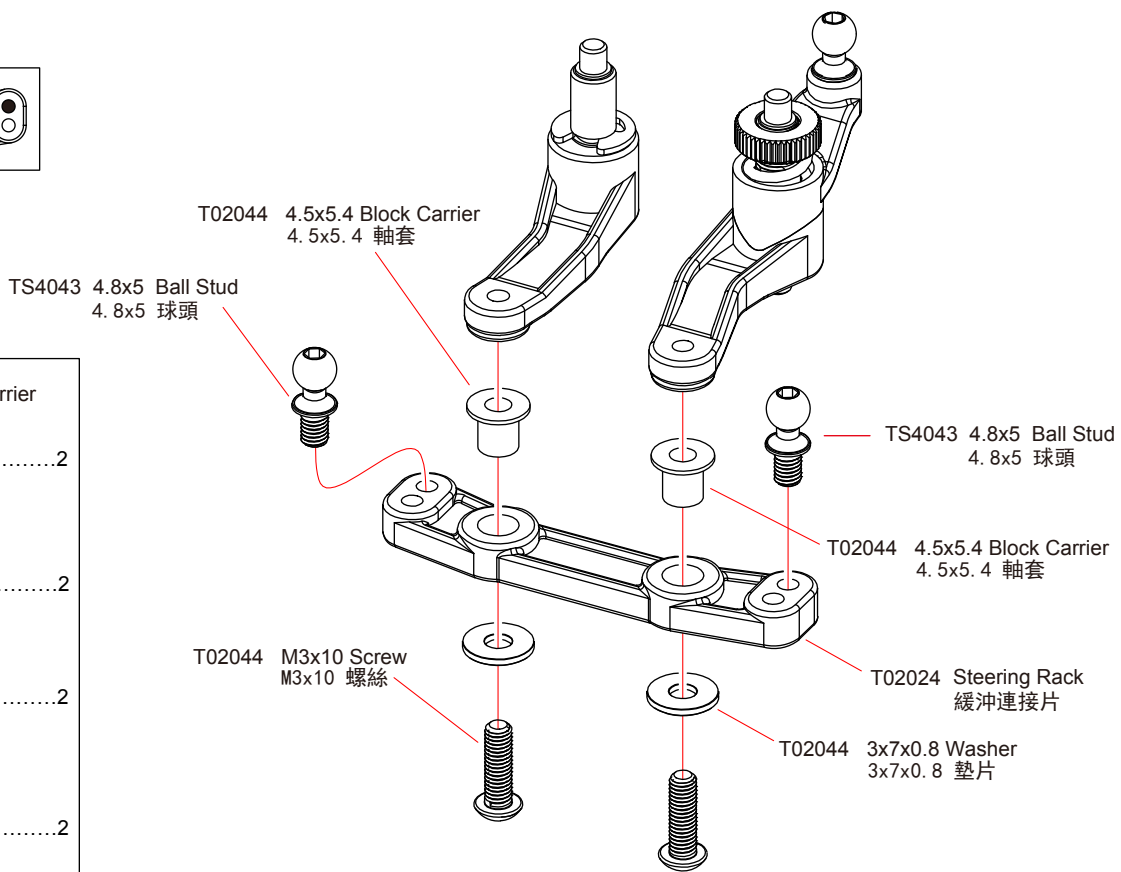

T02044 4.5x5.4 Block Carrier
4. 5x5. 4 軸套 2

T02044 M3x10 Screw
M3x10 螺絲 2

TS4043 4.8x5 Ball Stud
4. 8x5 球頭 2

T02044 3x7x0.8 Washer
3x7x0. 8 墊片 2

5 Front Suspension 前懸吊系統

Bag-A

T02082 M3x10 Screw M3x10螺絲 2

T02147 M3x25 Screw M3x25螺絲 1

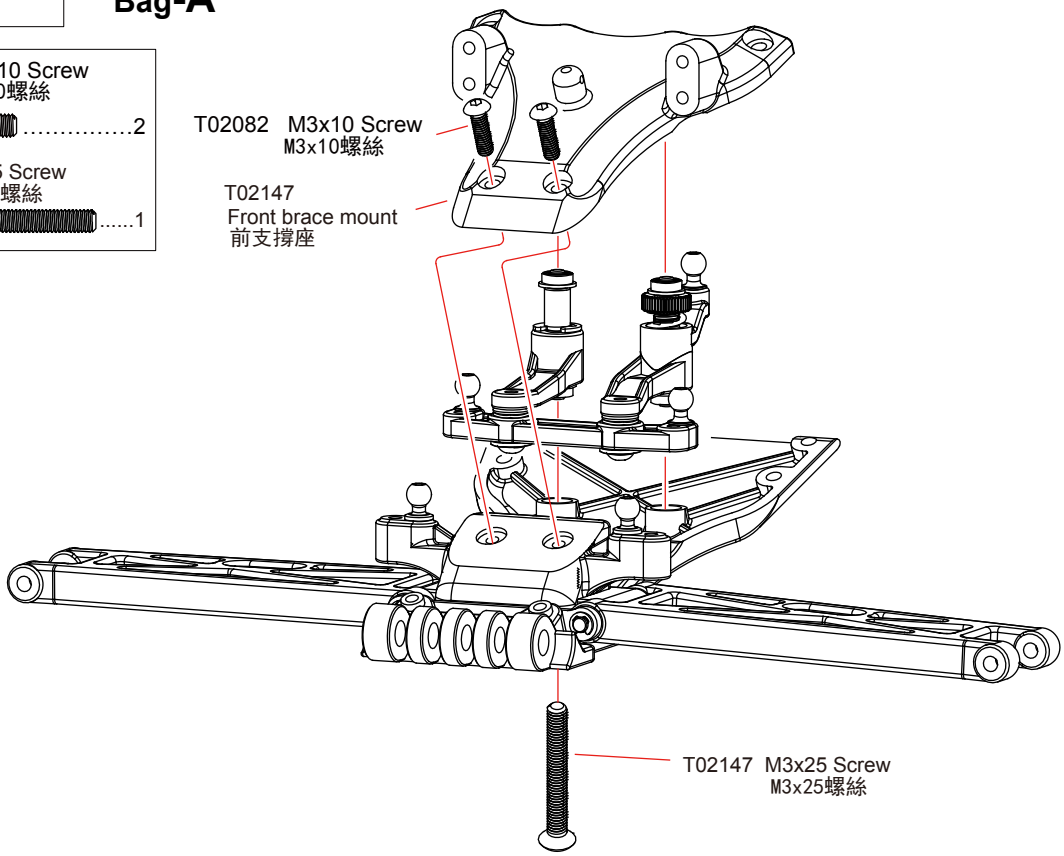

6 Front Suspension 前懸吊系統

L/R **Bag-A**

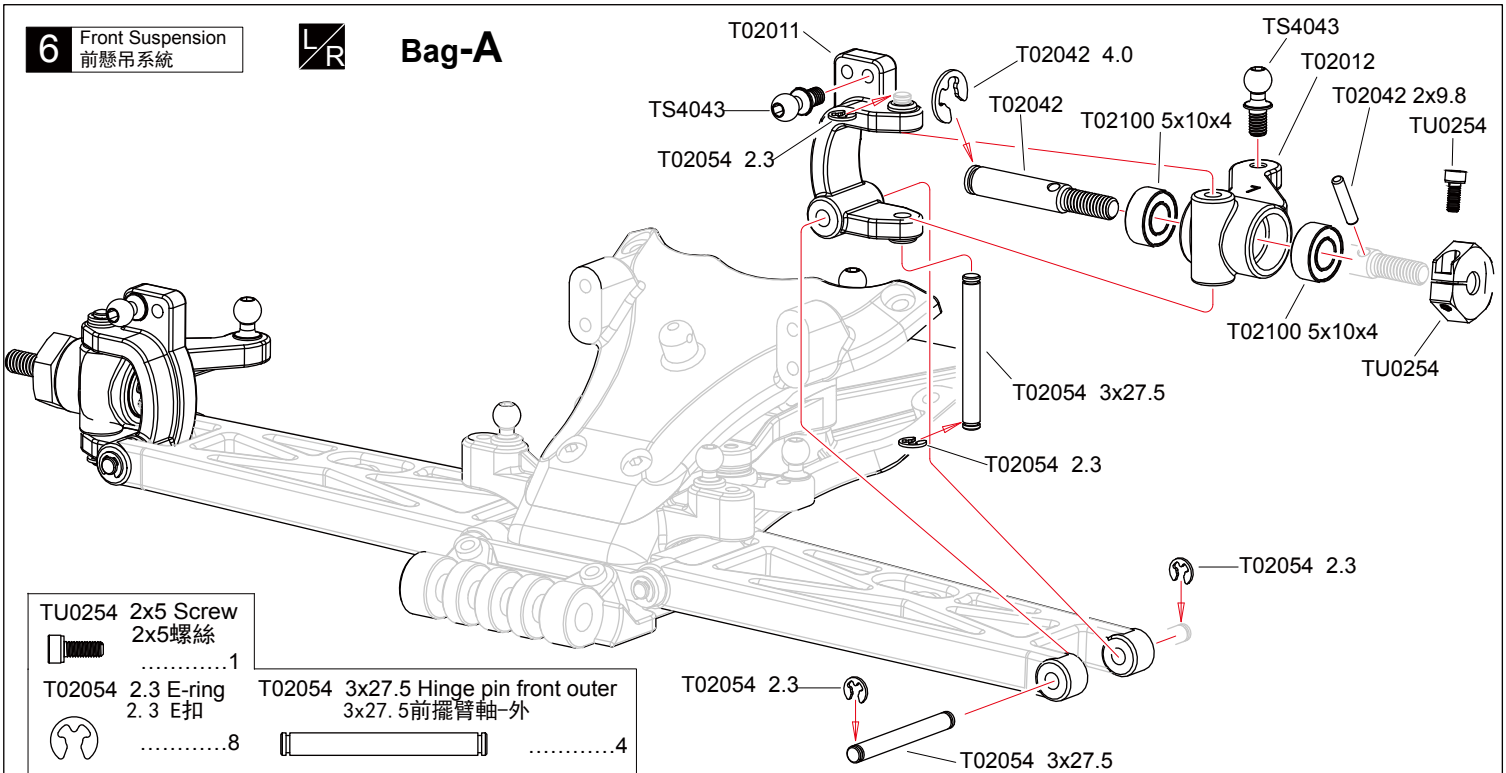

TU0254 2x5 Screw 2x5螺絲 1

T02054 2.3 E-ring 2.3 E扣 8

T02054 3x27.5 Hinge pin front outer 3x27.5前擺臂軸-外 4

T02042 4.0 E-ring 4.0 E扣 2

T02100 5x10x4 all bearing 5x10x4軸承 4

T02042 2x9.8 Shaft 2x9.8鋼針 2

TS4043 Ball stud-Short 球頭-短 4

L/R Assemble Both Left And Right 組裝左和右

7 Turnbuckle 拉桿

Bag-A

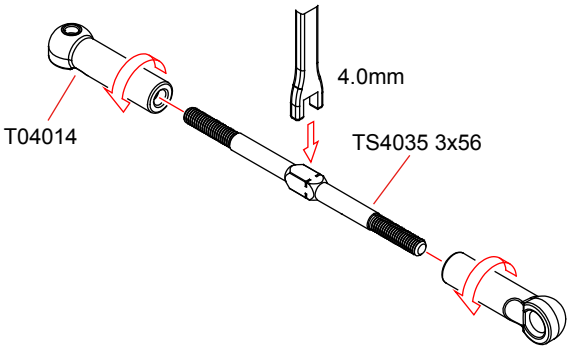

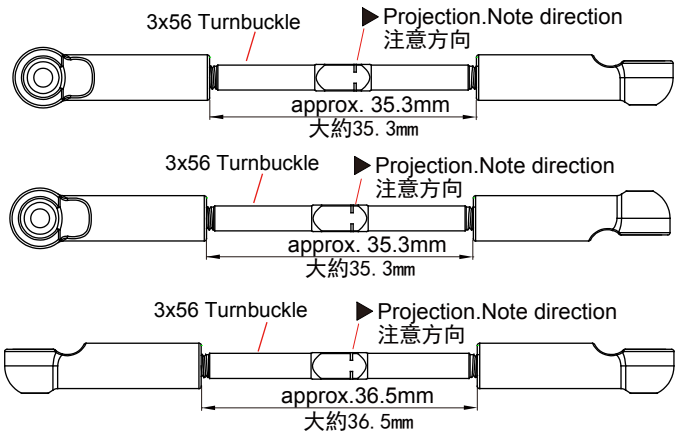

Front Upper-Left
前上拉桿-左
x1 1:1

Front Upper-Right
前上拉桿-右
x1 1:1

Steering Tip
轉向拉桿
x2 1:1

T04014 4.8mm Ball End(Long)
4. 8球頭座（長）
.....8

TS4035 3x56 Turnbuckle
3x56拉桿
.....4

8 Front Suspension 前懸吊系統

Bag-A

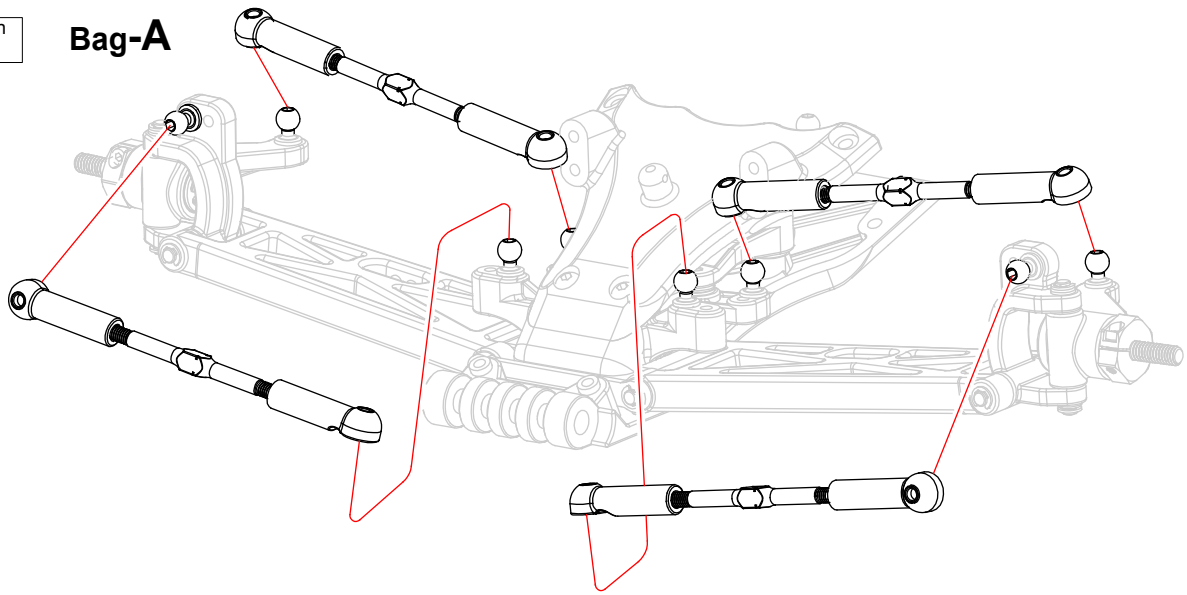

9 Front Suspension 前懸吊系統

Bag-A

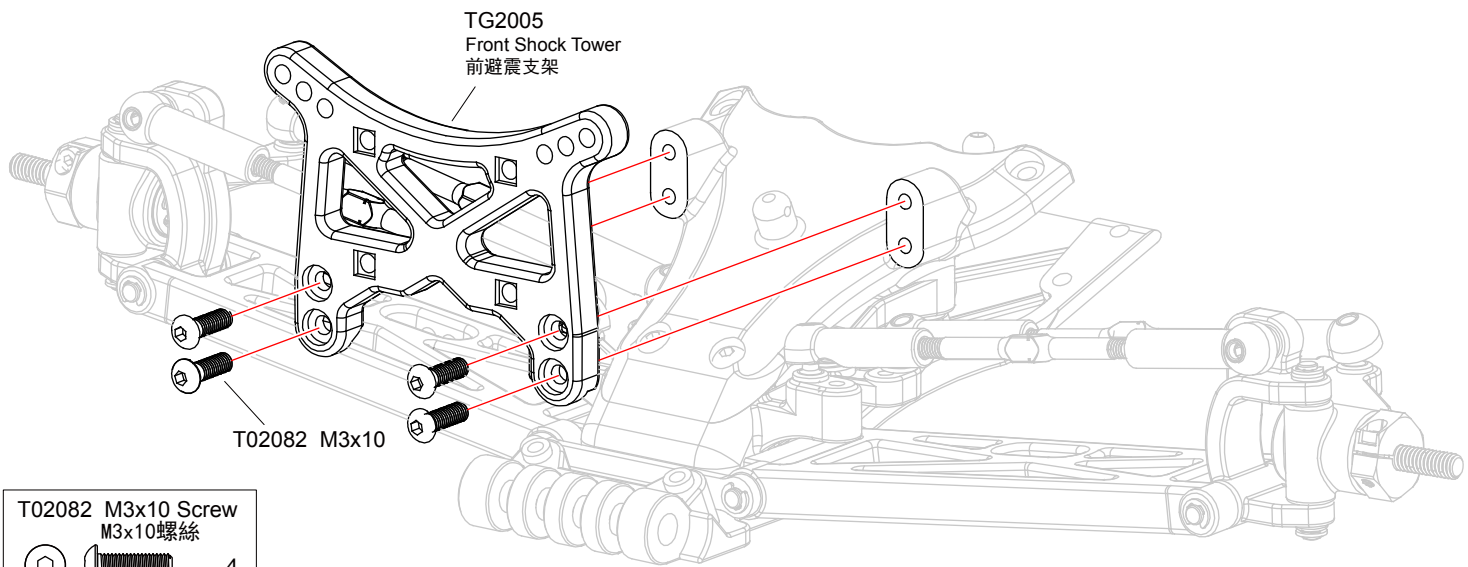

T02082 M3x10 Screw
M3x10螺絲
.....4

1:1 Ture-to -scale diagram
圖形比例

x1 Assemble as many times as specified
需組裝次數

10 Front Suspension 前縣吊系統

Bag-A

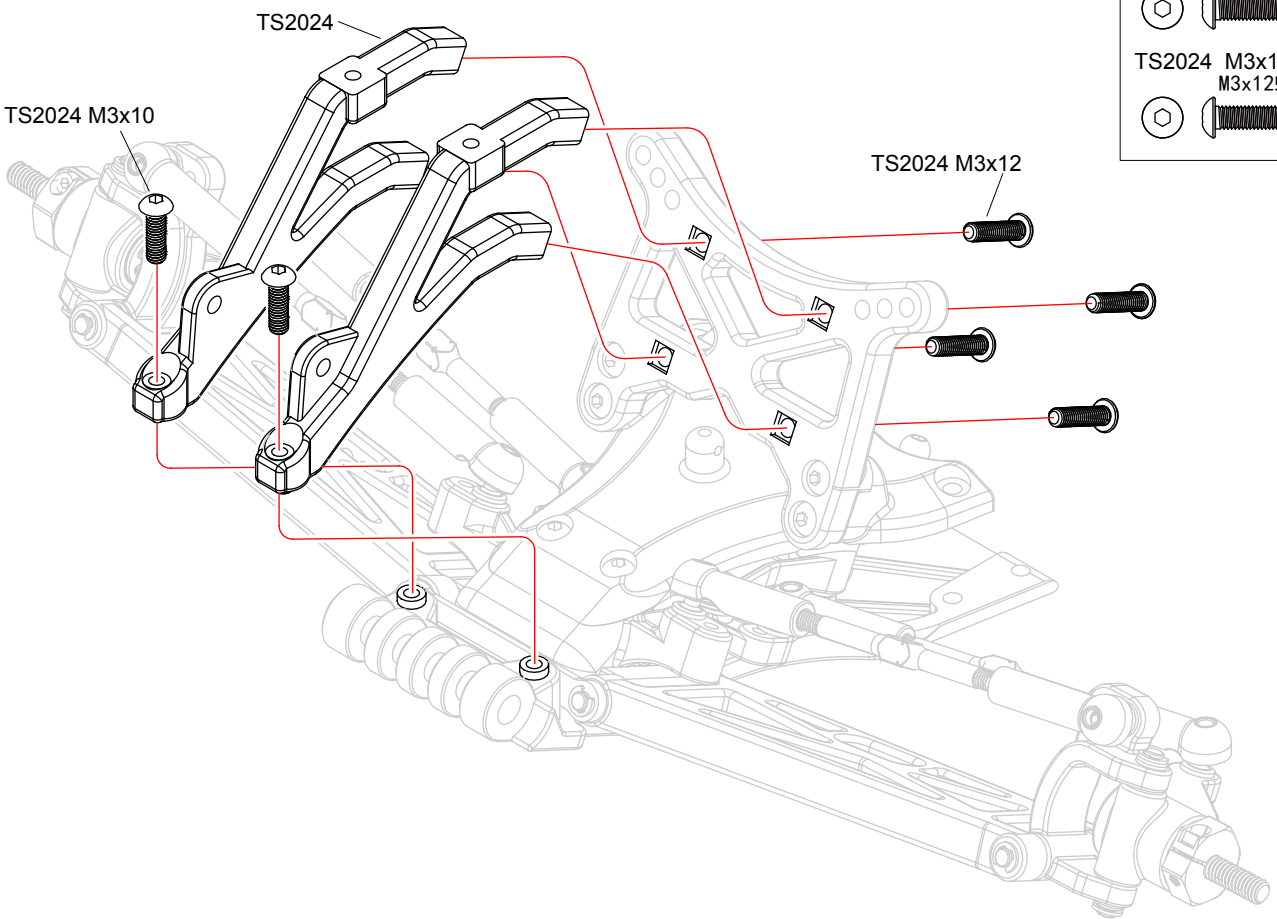

TS2024 M3x10 Screw M3x10螺絲	2
TS2024 M3x12 Screw M3x12螺絲	4

11 Front Suspension 前縣吊系統

Bag-A

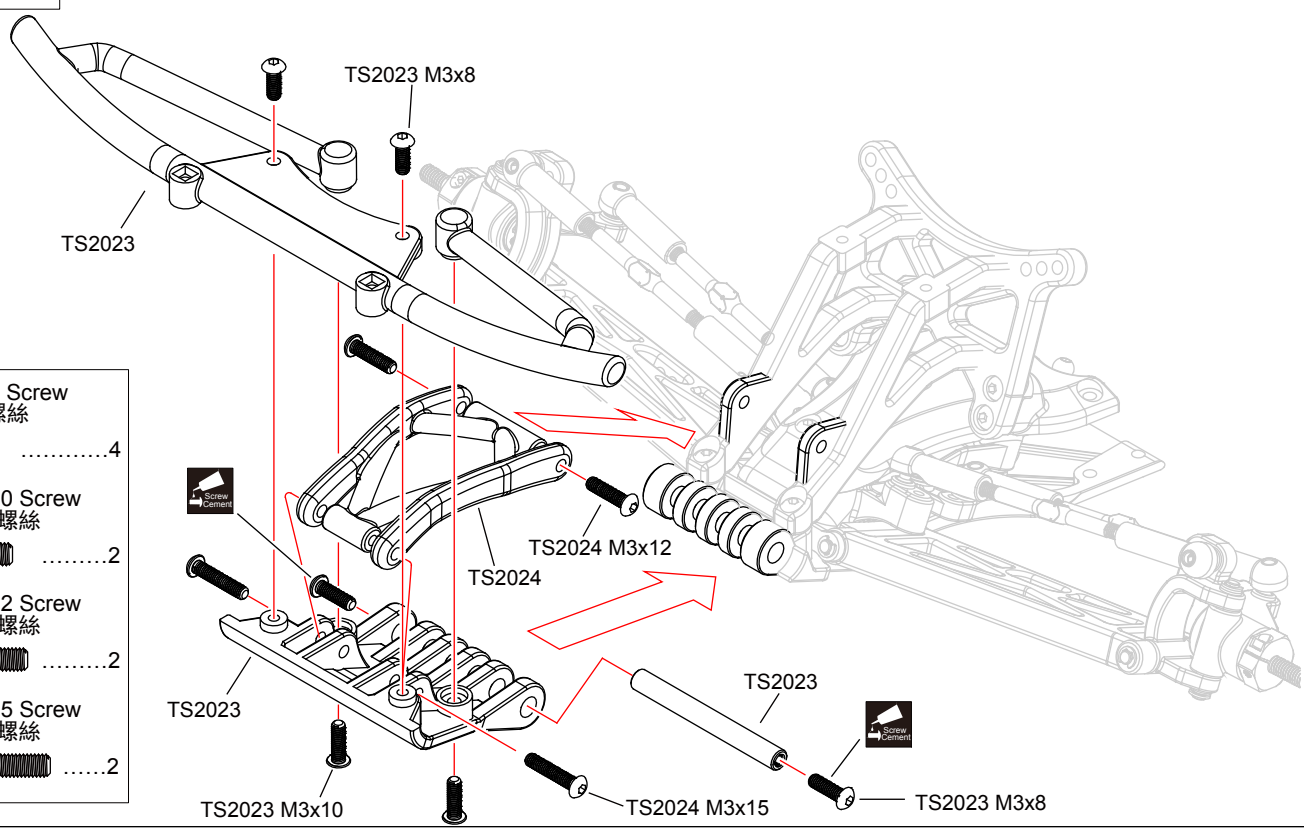

TS2023 M3x8 Screw M3x8螺絲	4
TS2023 M3x10 Screw M3x10螺絲	2
TS2024 M3x12 Screw M3x12螺絲	2
TS2024 M3x15 Screw M3x15螺絲	2

Apply threadlocker(screw cement)
打螺絲膠水

12 Side Plate 側板

Bag-B

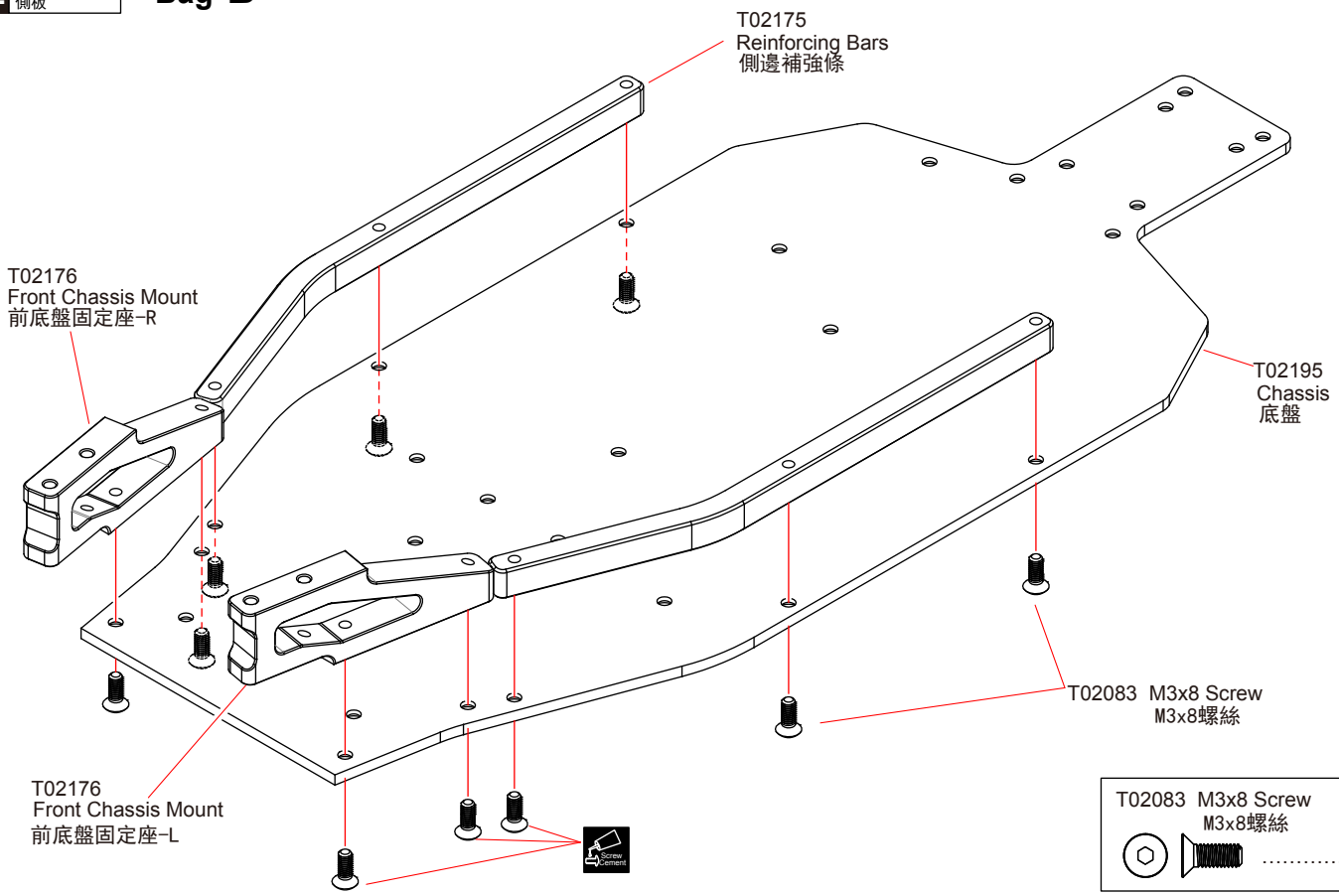

T02083 M3x8 Screw
M3x8螺絲 10

13 Front Suspension 前懸吊系統

Bag-B

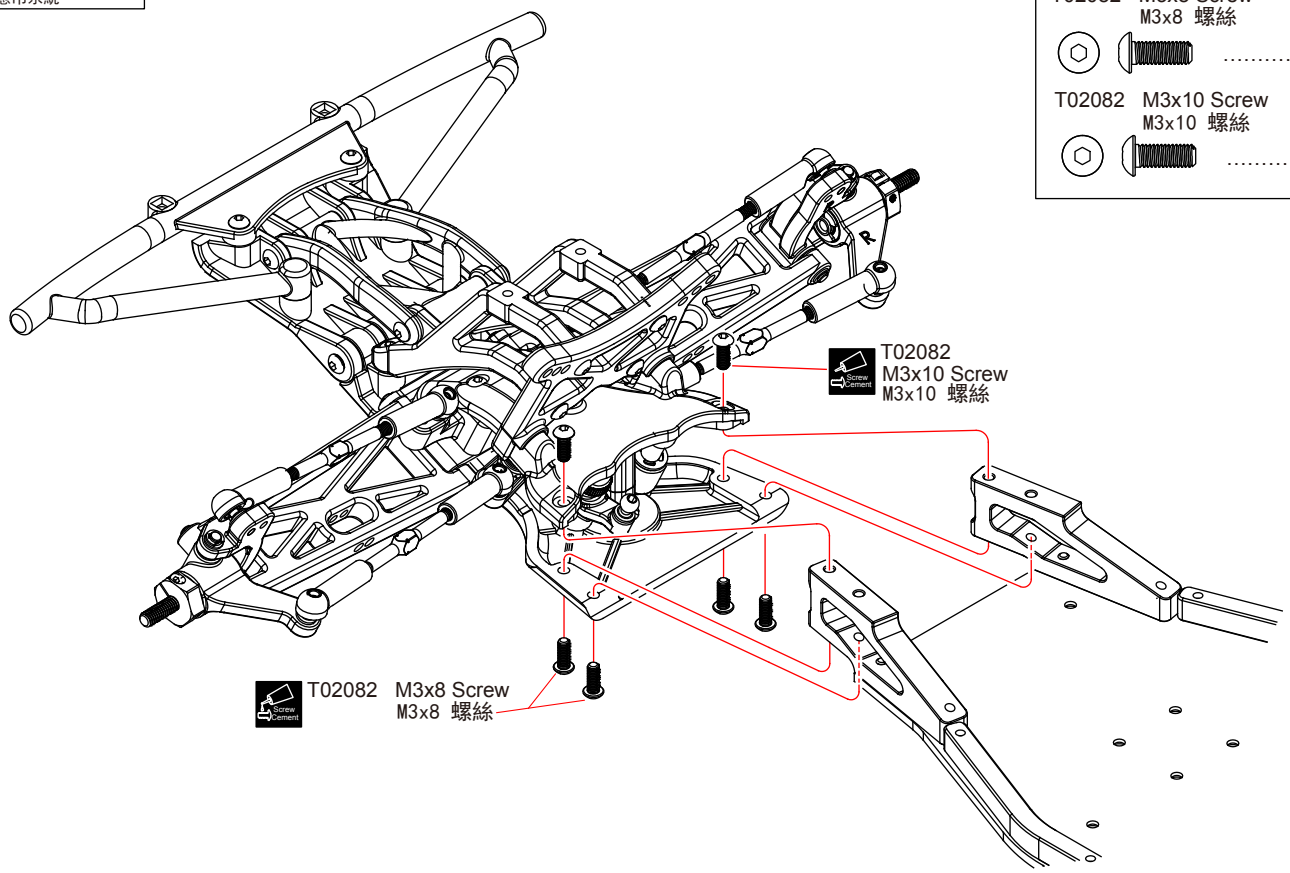

T02082 M3x8 Screw
M3x8 螺絲 4

T02082 M3x10 Screw
M3x10 螺絲 2

Apply threadlocker(screw cement)
打螺絲膠水

14 Steering Servo 轉向伺服系統

Bag-B

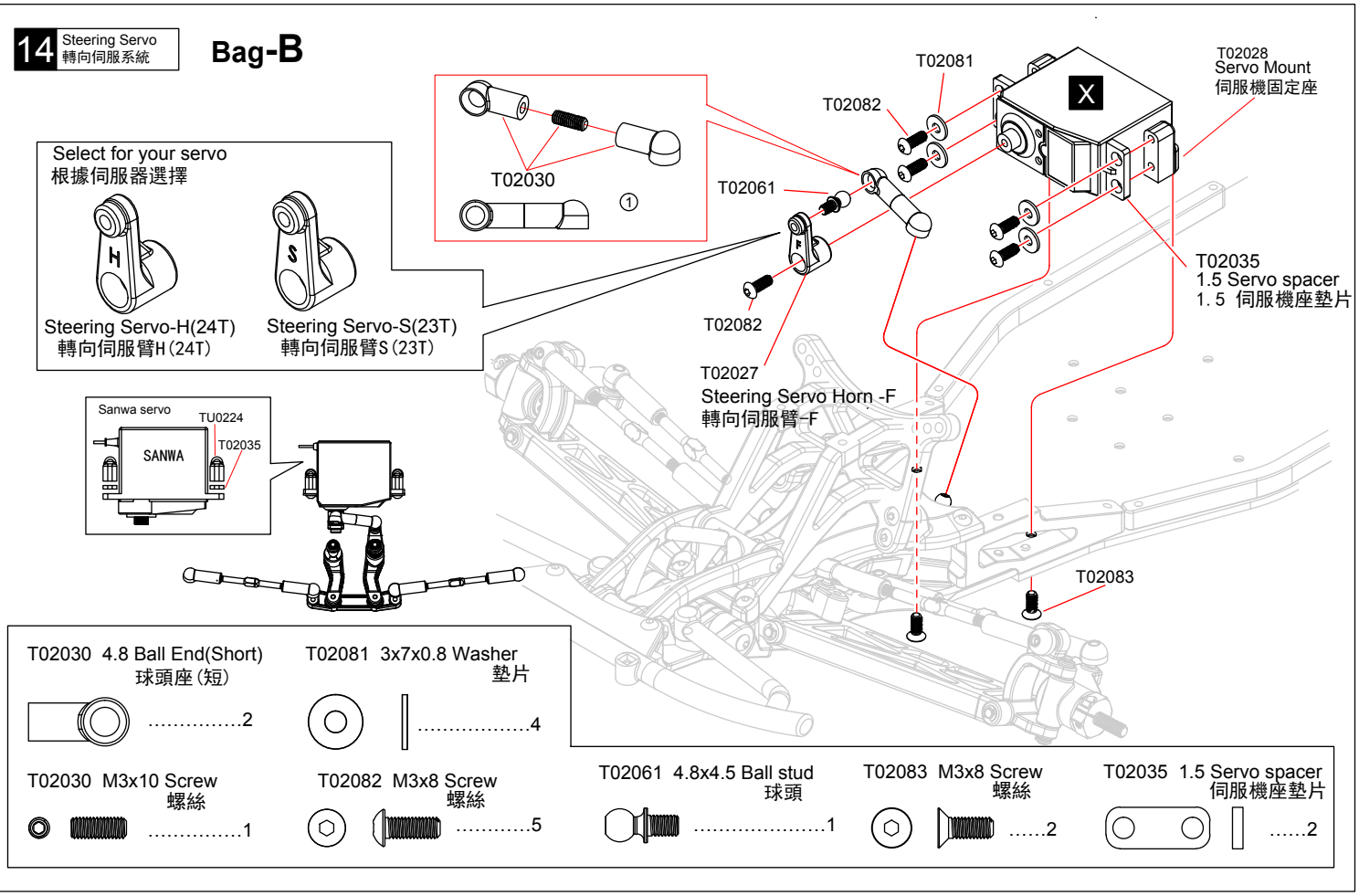

15 Motor Mount/ Center Diff Mount /Rear Gear-box-lower 馬達座/中差座/後齒輪箱-底座

Bag-B

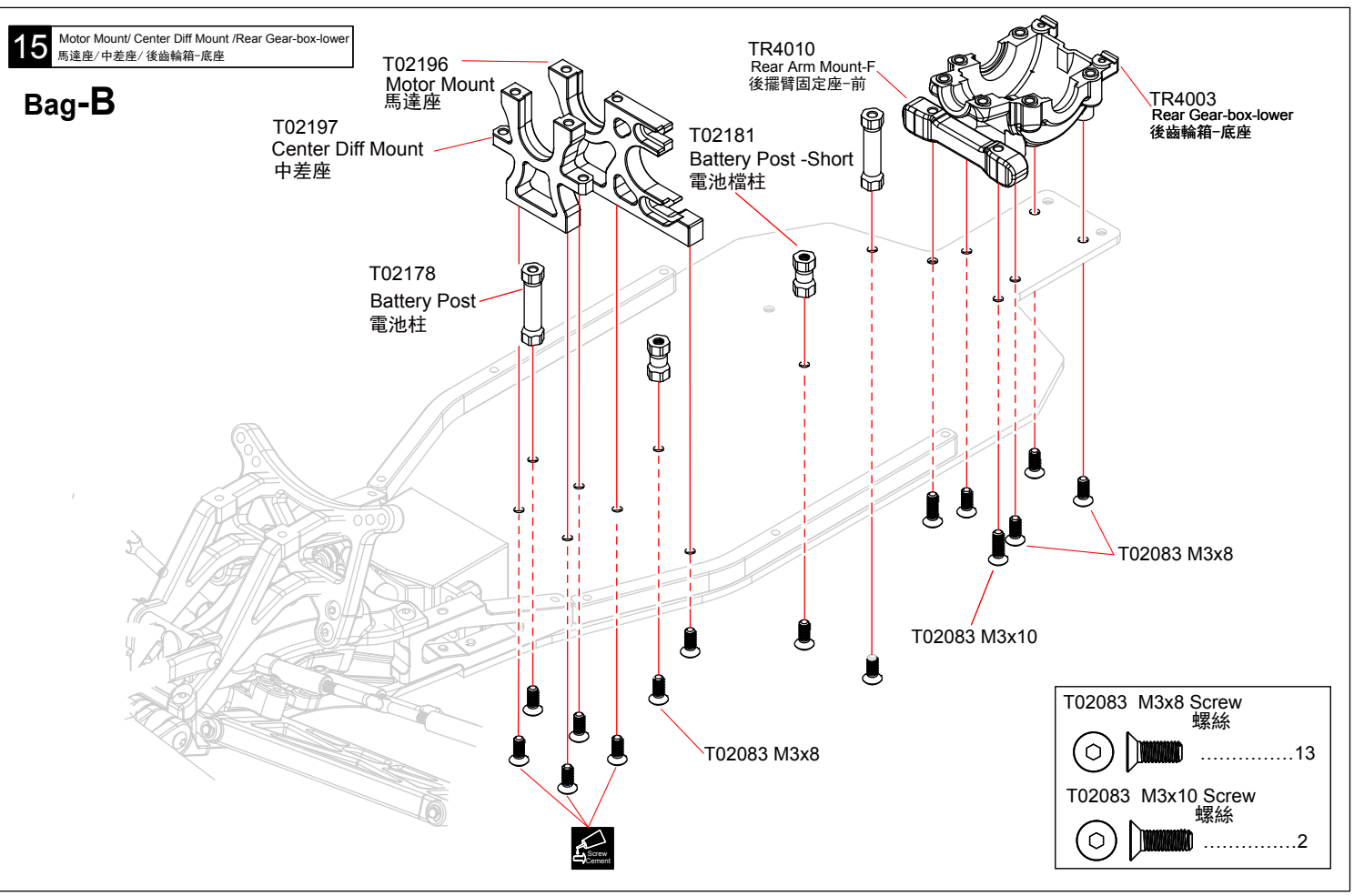

Screw Cement Apply threadlocker(screw cement)
打螺絲膠水

16 Upper Deck-Front 二樓板-前

Bag-B

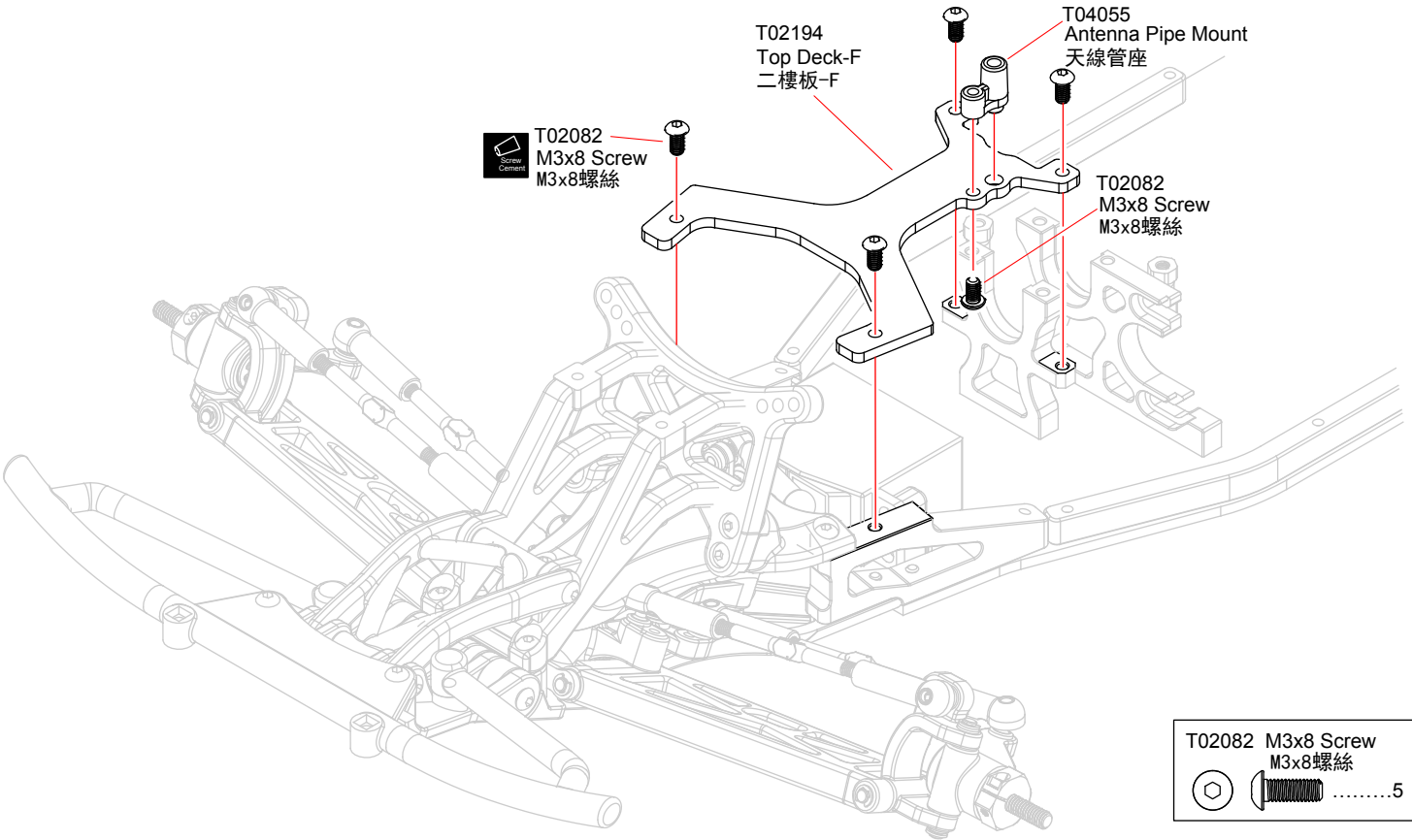

17 Mid Gear 中齒輪

Bag-C

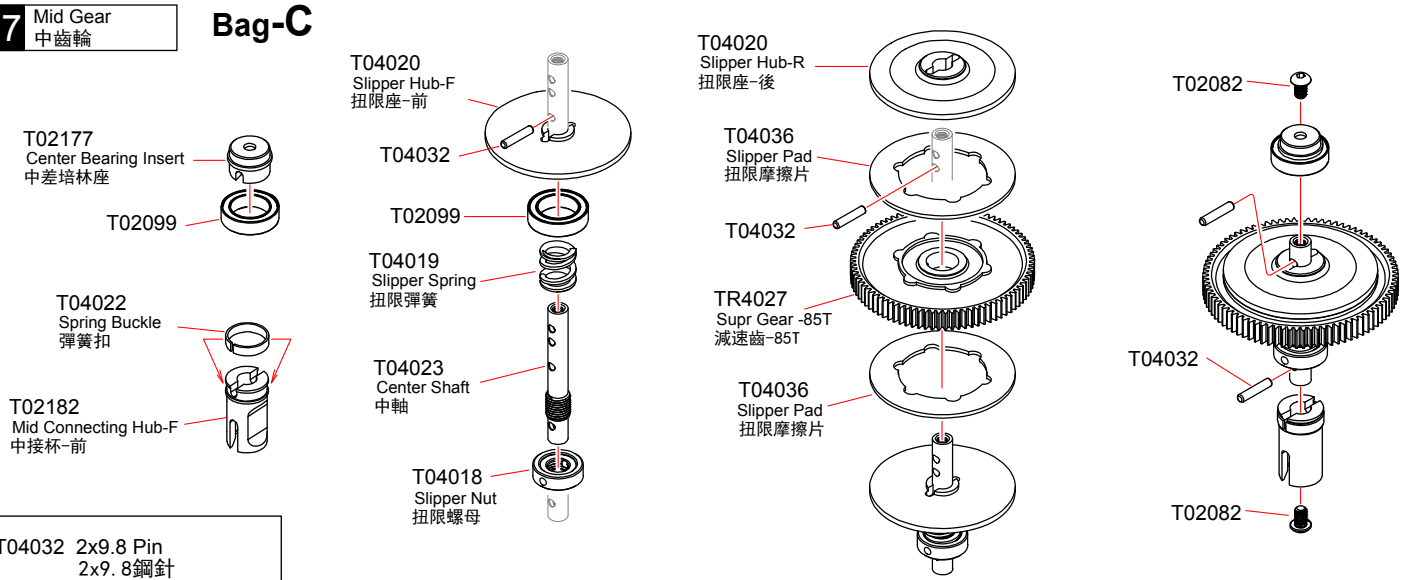

T04032 2x9.8 Pin
2x9. 8鋼針 4

T02082 M3x5 Screw
M3x5螺絲 2

T02099 10x15x4 Ball Bearing
10x15x4 軸承 2

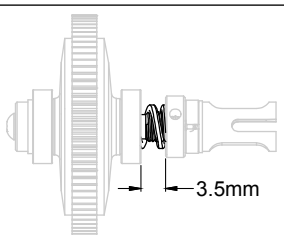

Aften first run, re-adjust to around 3.5mm
運行後再調整到3. 5mm

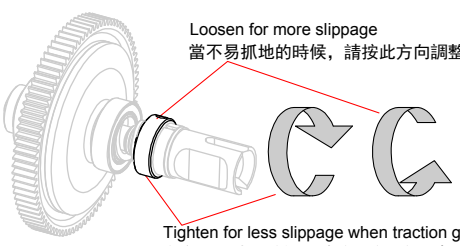

Screw Cement Apply threadlocker(screw cement)
打螺絲膠水

18 Diff 差速器 Bag-C

TS4040 3.0 E-ring
3. 0 E扣 2

TS4039 5.1x13x0.2 Washer
5. 1x13x0. 2墊片 2

T04040 4.8x1.6 O-ring
4.8x1.6 O 2

T02099 10x15x4 Ball Bearing
10x15x4軸承 2

TS4039 Diff shaft
差速軸 2

T04041 10x12x0.2 Washer
10x12x0. 2墊片 2

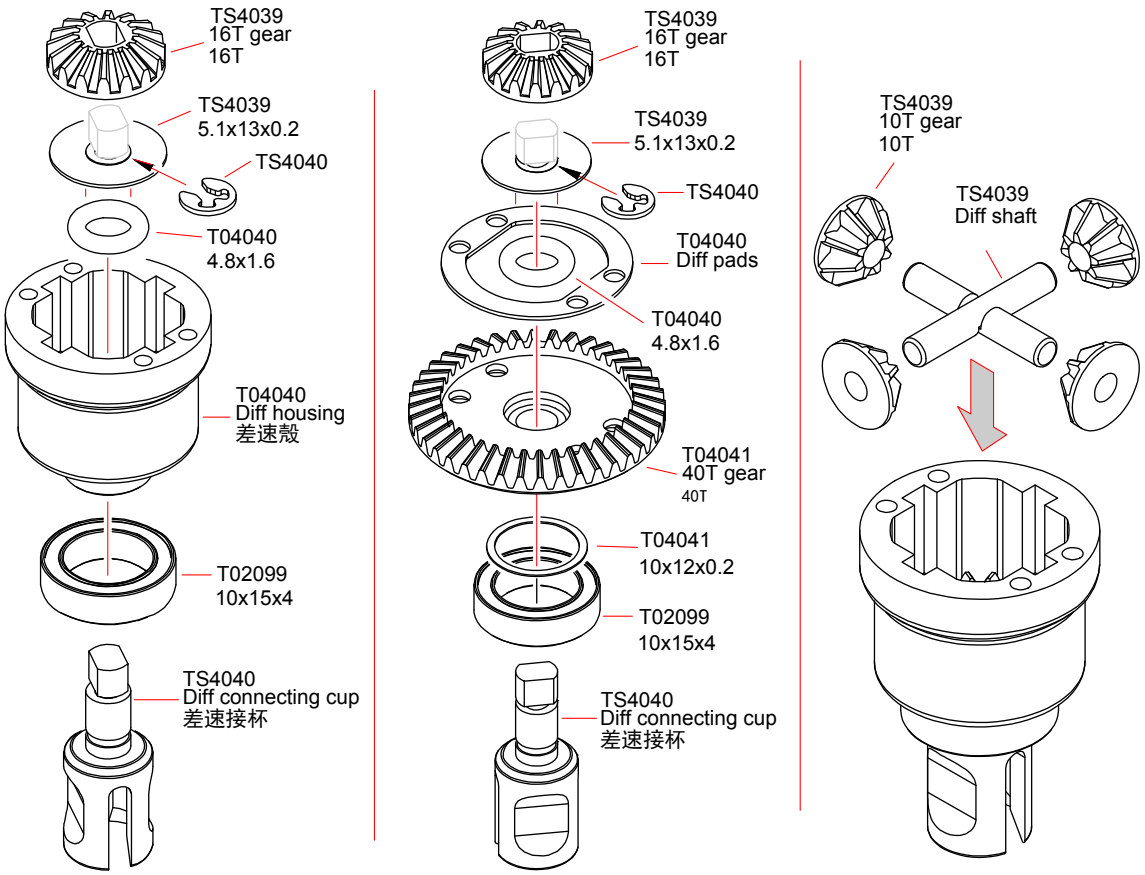

19 Diff / Mid Rear CVD 差速器/中後CVD Bag-C

T04040 M2.5x6 Screw
M2. 5x6螺絲 4

TS4033 M3x8 Screw
M3x8螺絲 2

T02100 5x10x4 Ball Bearing
5x10x4軸承 2

86000 5.1x8x0.2 Washer
5. 1x8x0. 2墊片 2

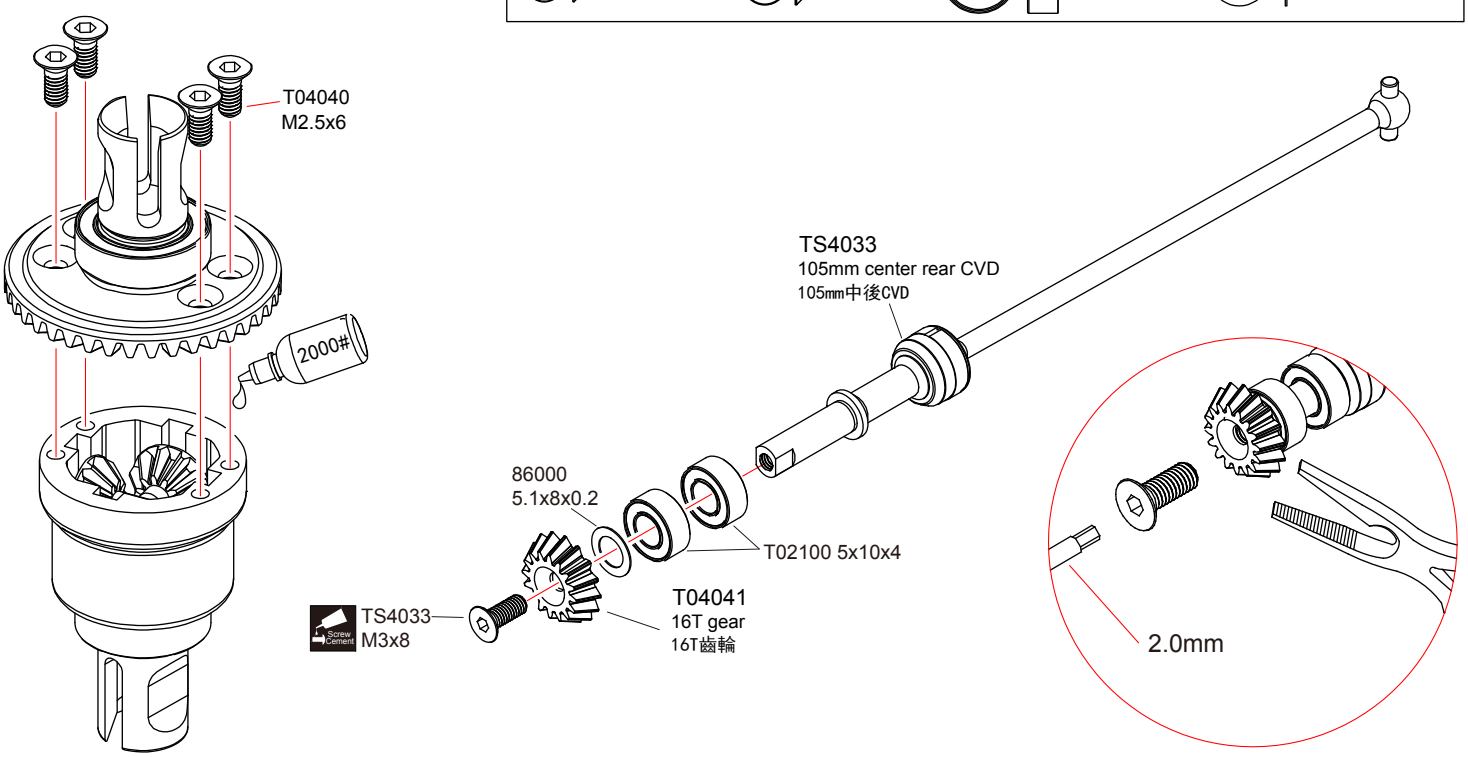

Apply threadlocker(screw cement)
打螺絲膠水

20 Rear Gear-Box 後齒輪箱

Bag-C

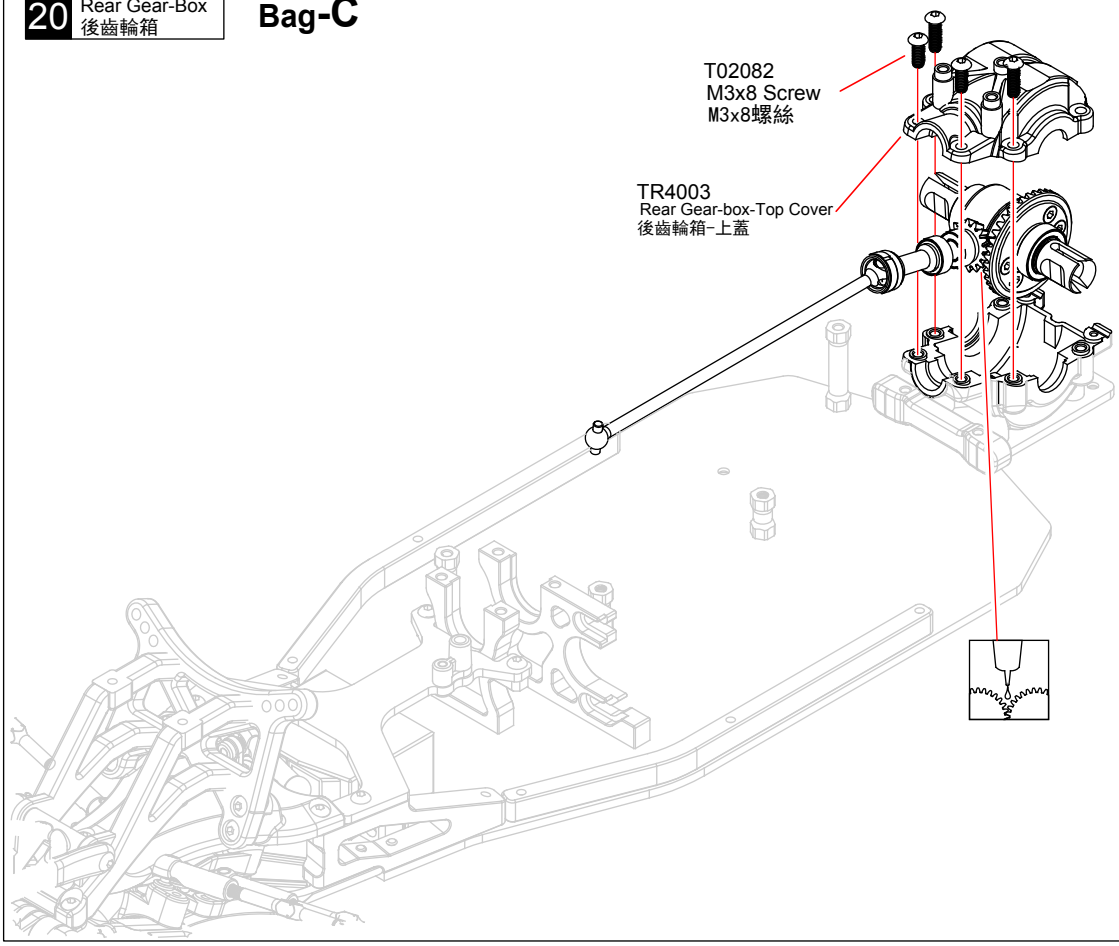

T02082 M3x8 Screw
M3x8螺絲 2

21 Center Gear 中齒輪

Bag-C

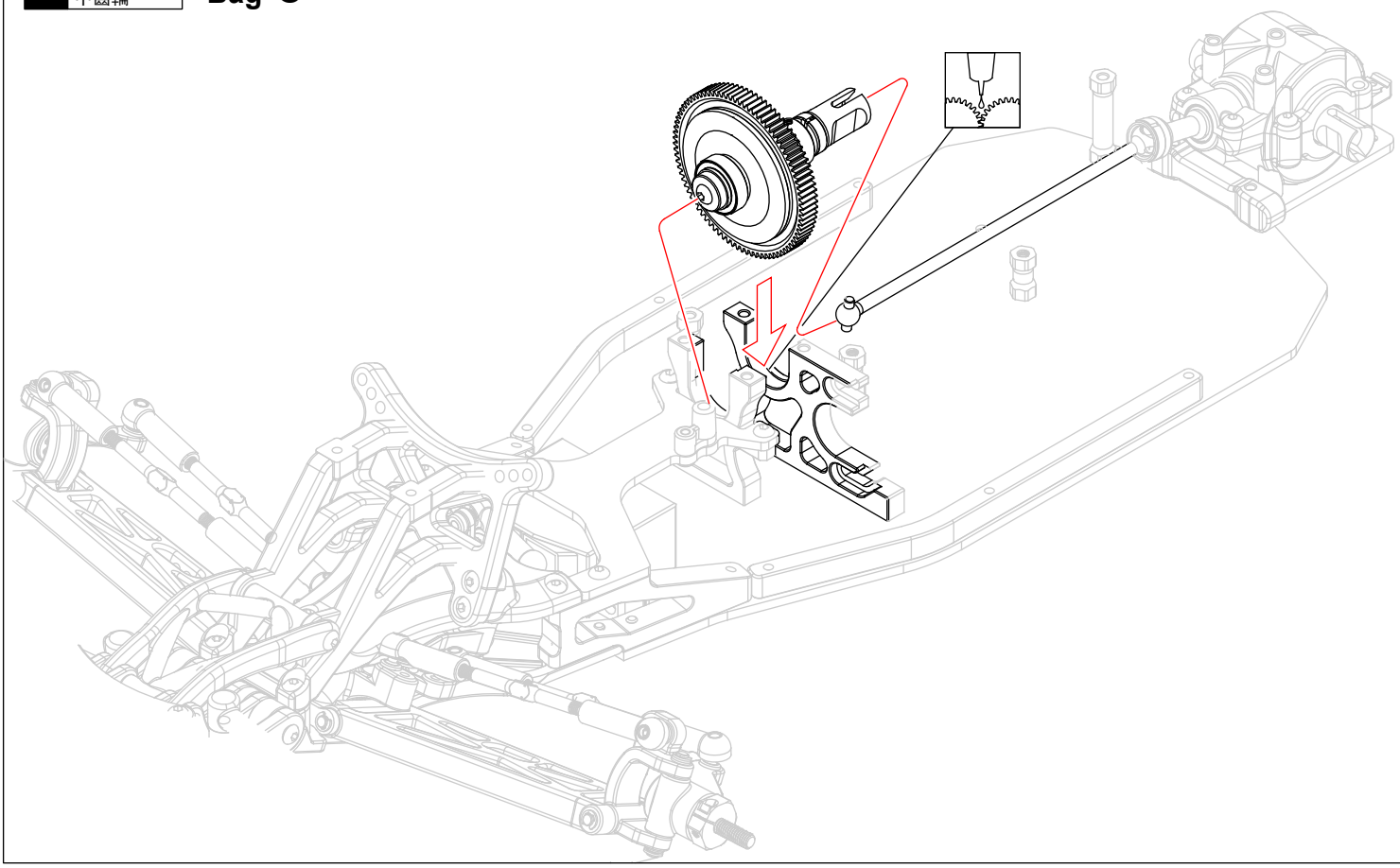

22 Upper Deck-Rear / Rear Upper Suspension Arm Mount 二樓板－後、後上擺臂座

Bag-C

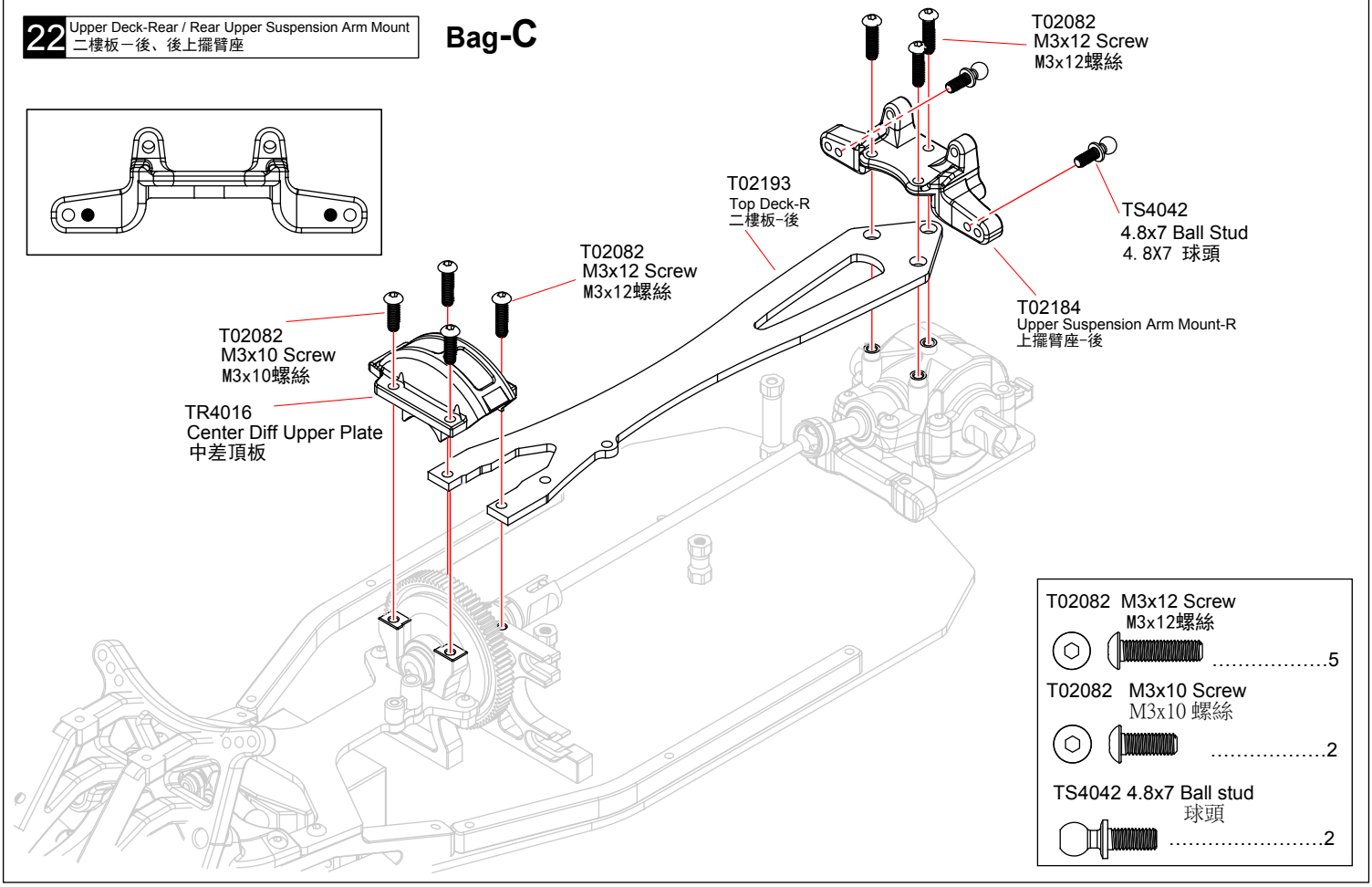

T02082 M3x12 Screw M3x12螺絲	5
T02082 M3x10 Screw M3x10 螺絲	2
TS4042 4.8x7 Ball stud 球頭	2

23 Rear hub carriers 後輪座

L/R **Bag-D**

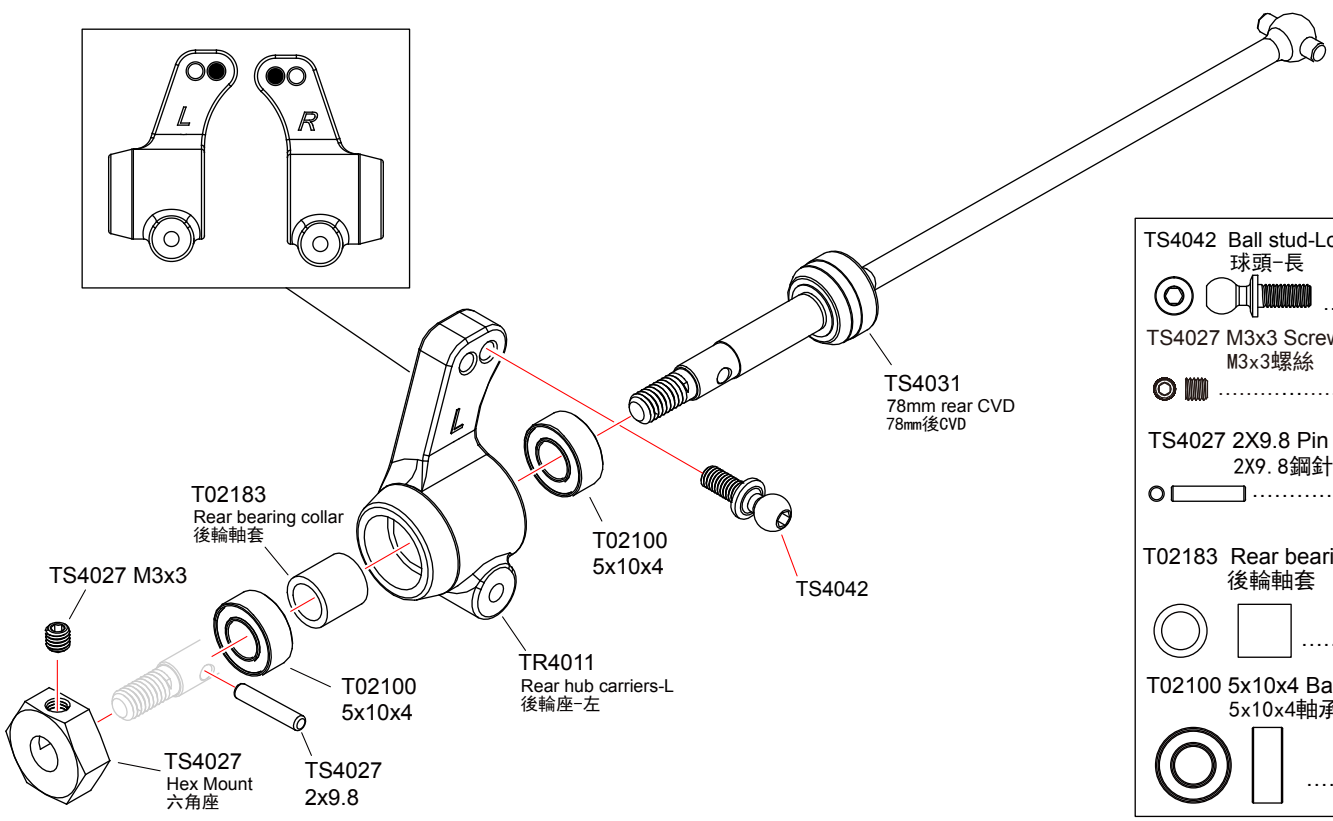

TS4042 Ball stud-Long 球頭-長	2
TS4027 M3x3 Screw M3x3螺絲	2
TS4027 2X9.8 Pin 2X9. 8鋼針	2
T02183 Rear bearing collar 後輪軸套	2
T02100 5x10x4 Ball bearing 5x10x4軸承	4

L/R Assemble both Left and Right
組裝左和右

24 Rear Suspension Arm 後擺臂

L/R **Bag-D**

TR4011 2.5x6x1 Washer
2. 5x6x1墊片
.....4

T02191 M2.5x4 Screw
M2. 5x4螺絲
.....2

TR4046 2.5x30 Arm Pin
2. 5x30擺臂軸
.....2

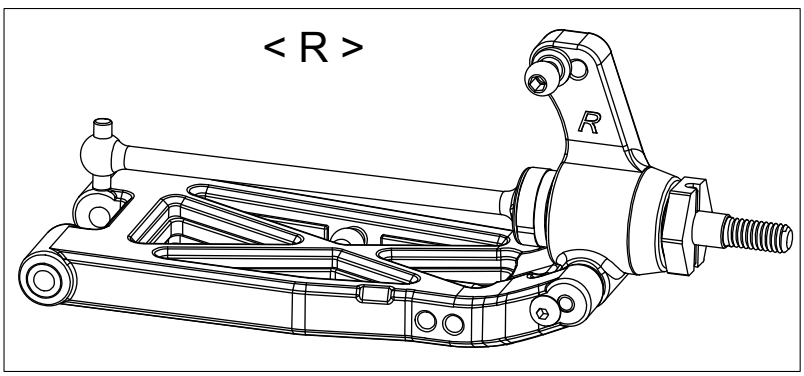

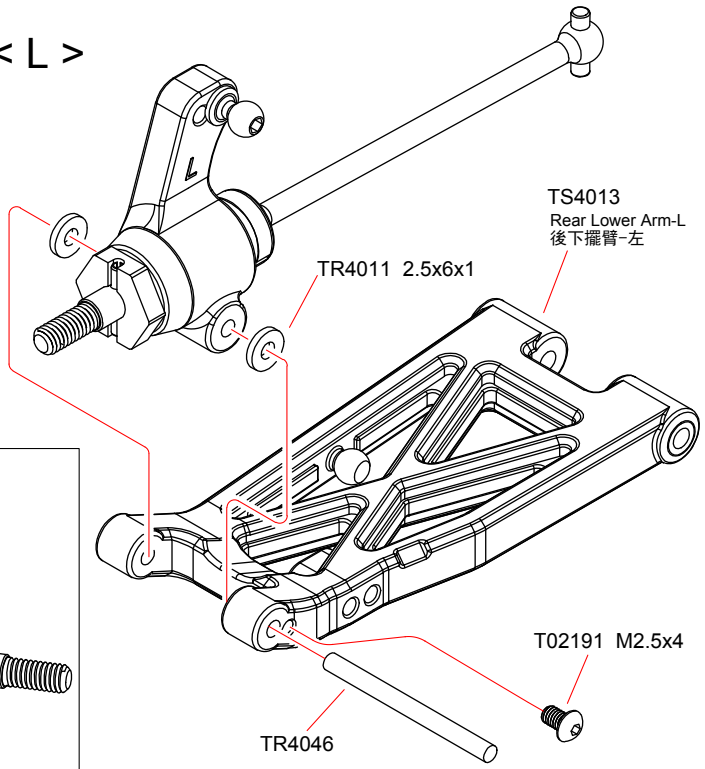

25 Rear Suspension Arm 後擺臂

L/R

Bag-D

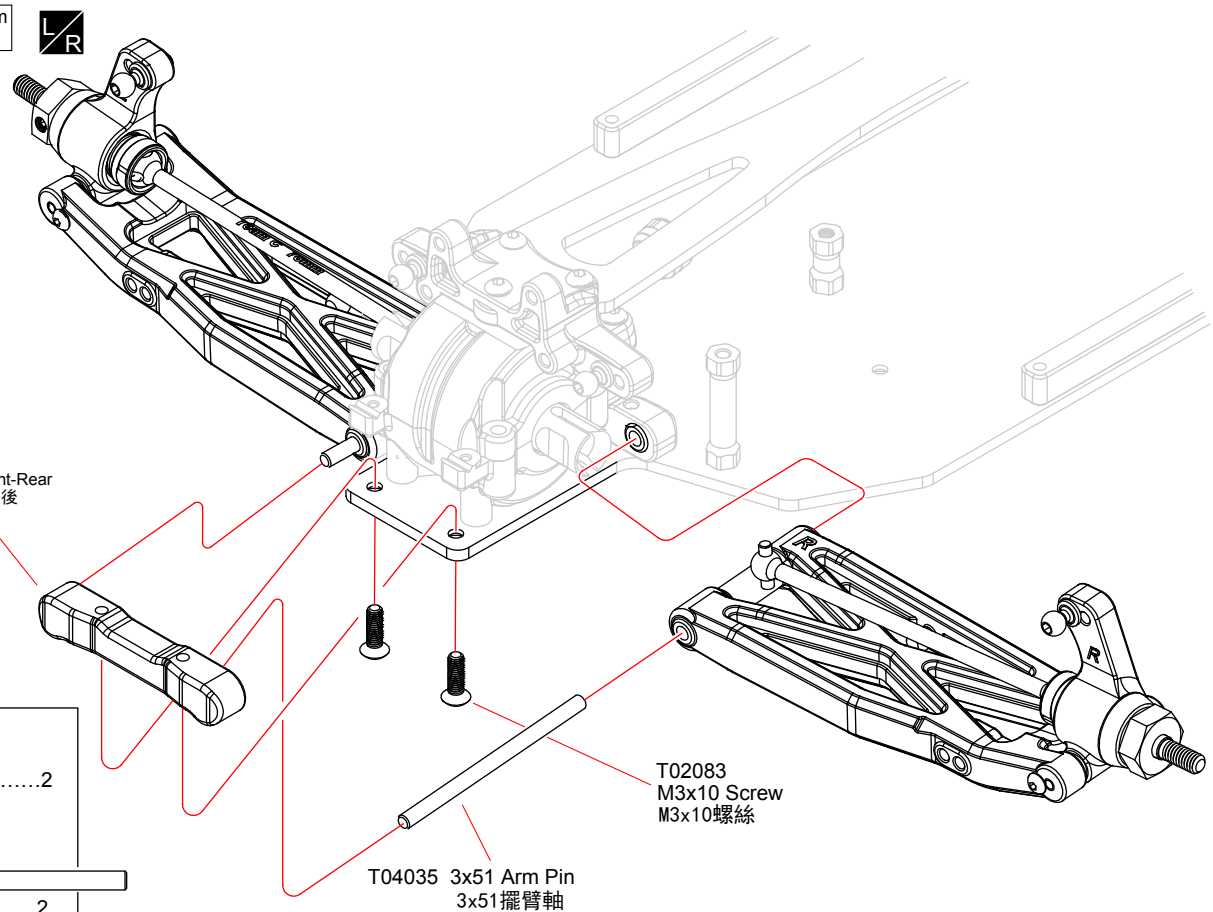

T02083 M3x10 Screw
螺絲
.....2

T04035 3x51 Arm Pin
3x51擺臂軸
.....2

L/R Assemble both Left and Right
組裝左和右

26 Rear Turnbuckle 後拉桿

Bag-D

L/R

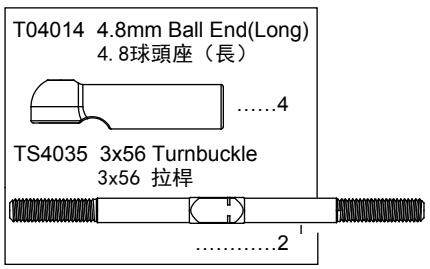

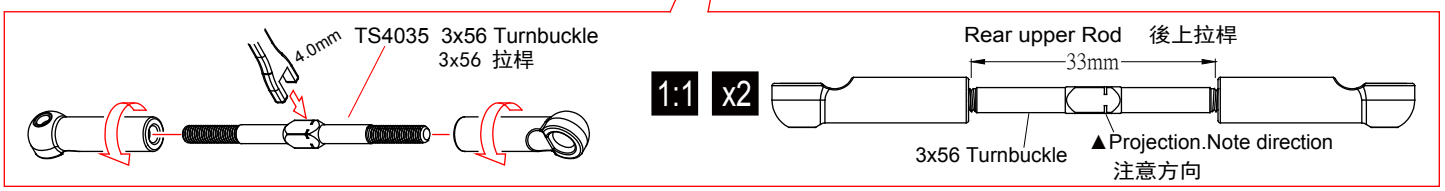

27 Rear Swaybar 後防傾桿

Bag-D

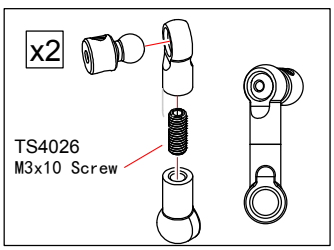

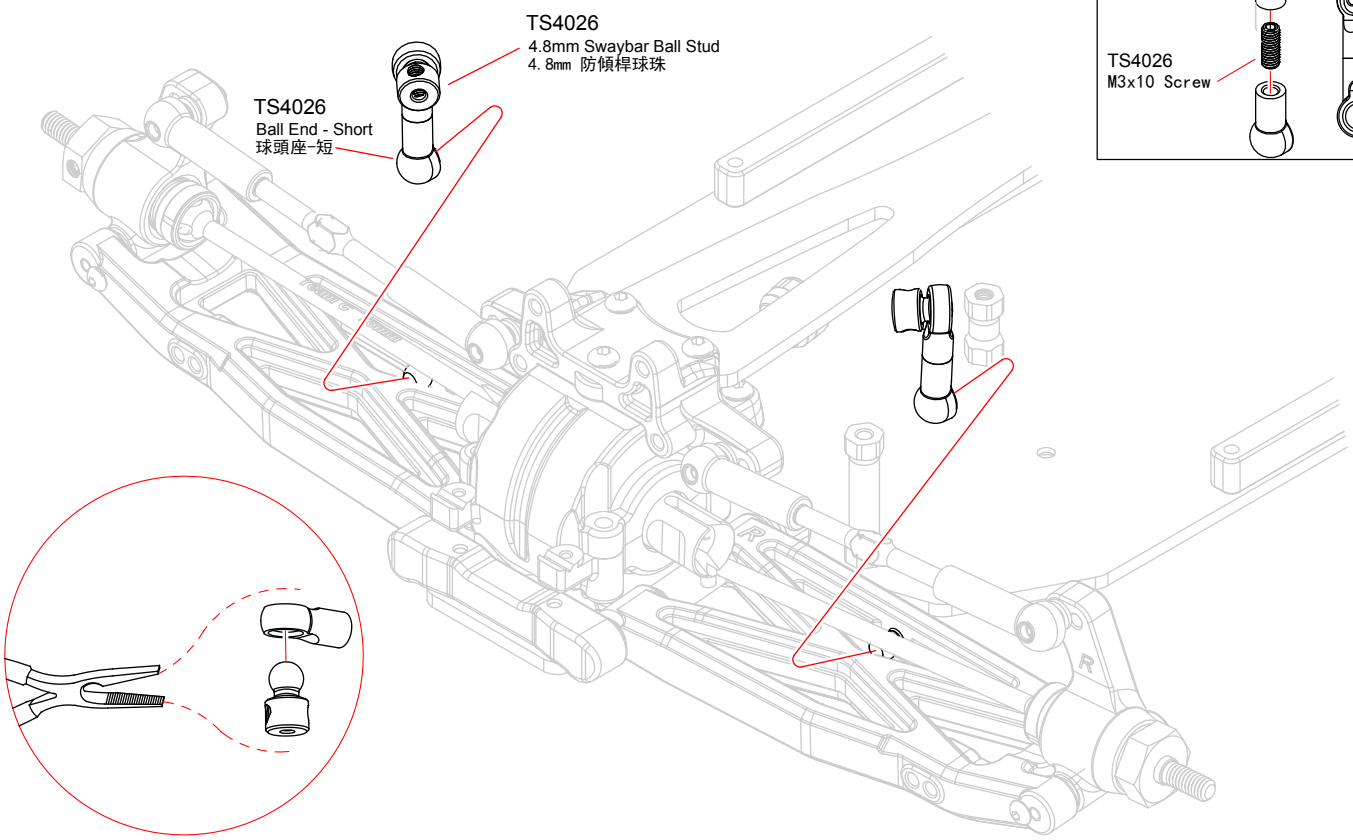

L/R Assemble both Left and Right 組裝左和右

1:1 Ture-to -scale diagram 圖形比例

x2 Assemble as many times as specified 需組裝數量

28 Rear Swaybar 後防傾桿

Bag-D

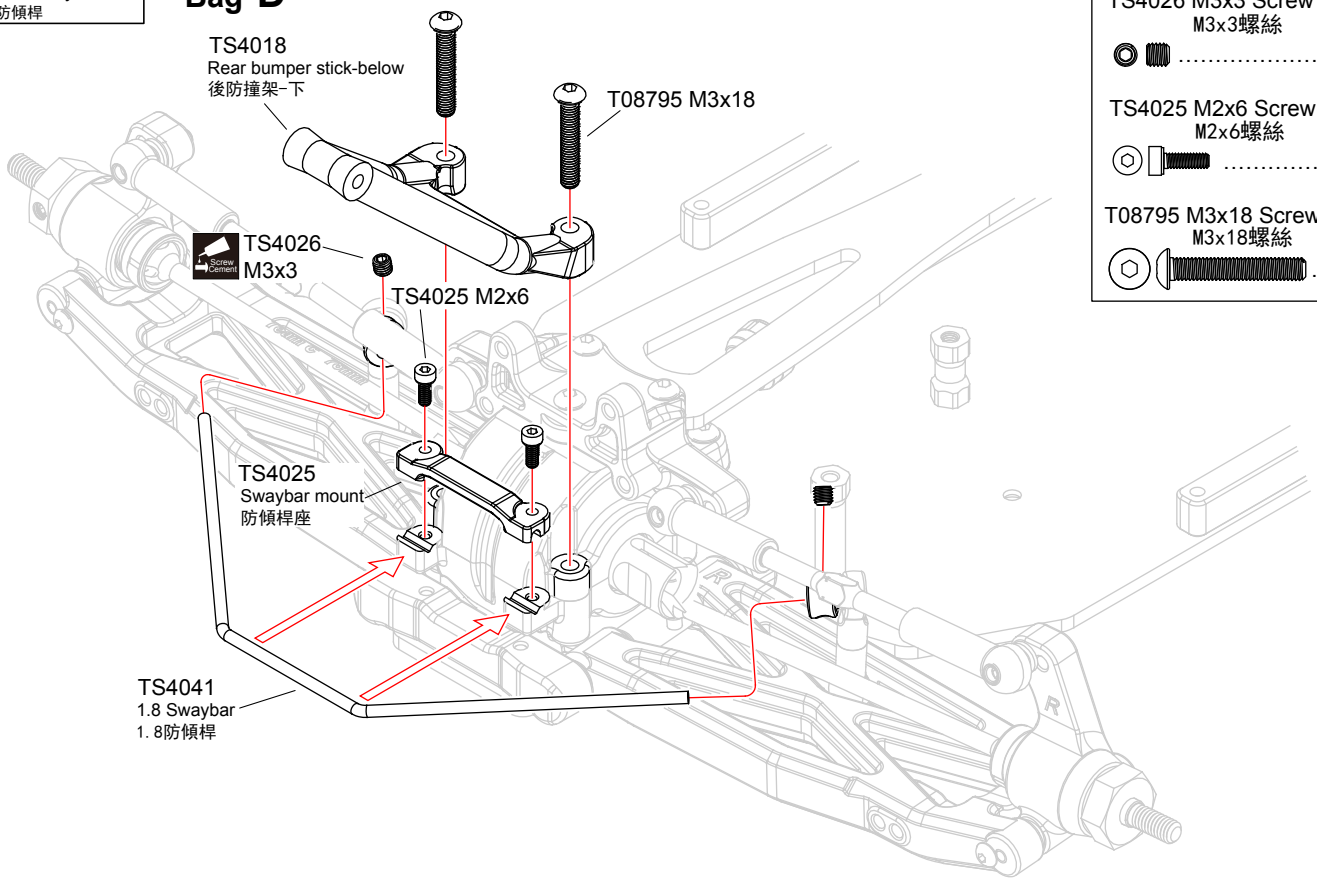

TS4026 M3x3 Screw M3x3螺絲	2
TS4025 M2x6 Screw M2x6螺絲	2
T08795 M3x18 Screw M3x18螺絲	2

29 Rear suspension 後懸吊系統

Bag-D

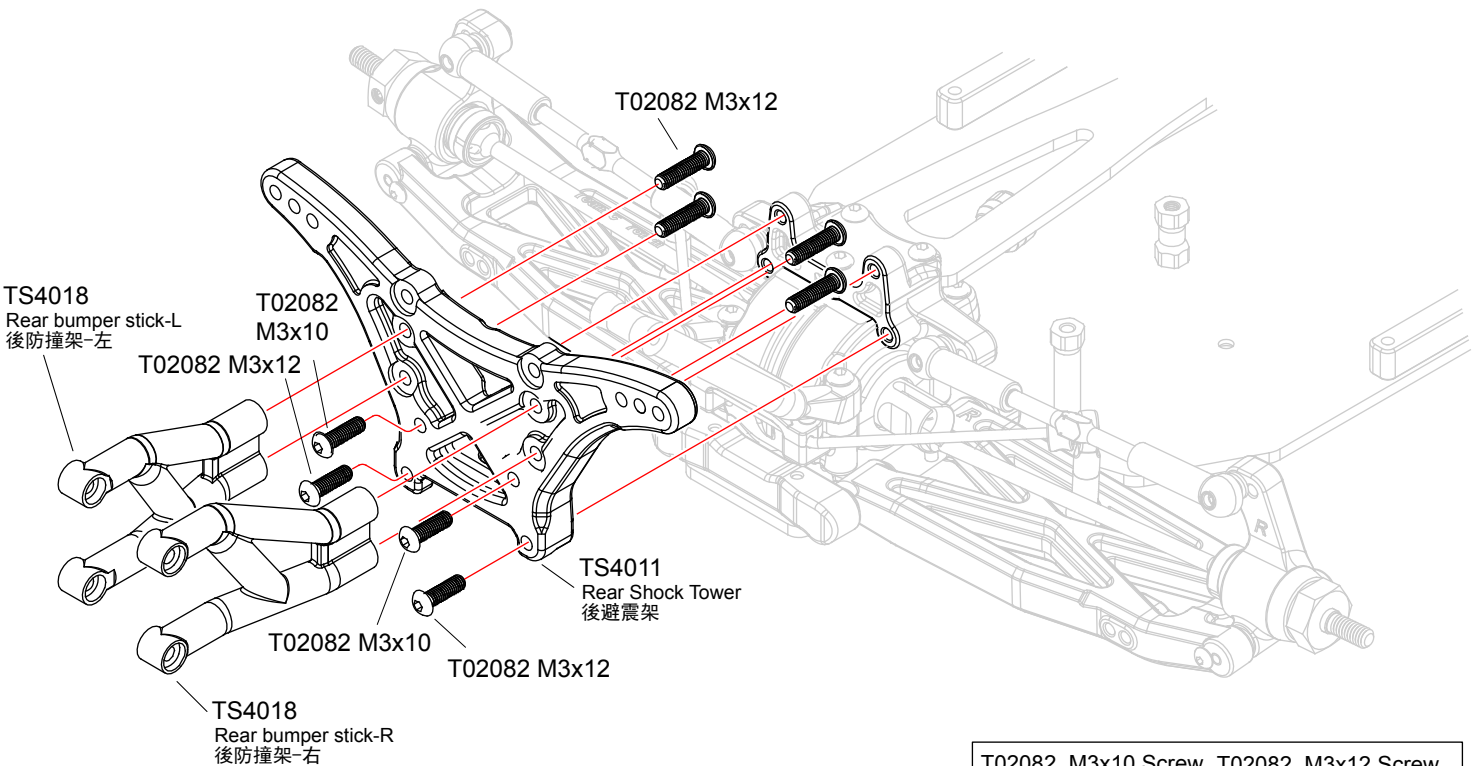

T02082 M3x10 Screw M3x10螺絲	2
T02082 M3x12 Screw M3x12螺絲	6

Apply threadlocker(screw cement)
打螺絲膠水

30 Shock Absorber 避震器 F/R x2 Bag-E

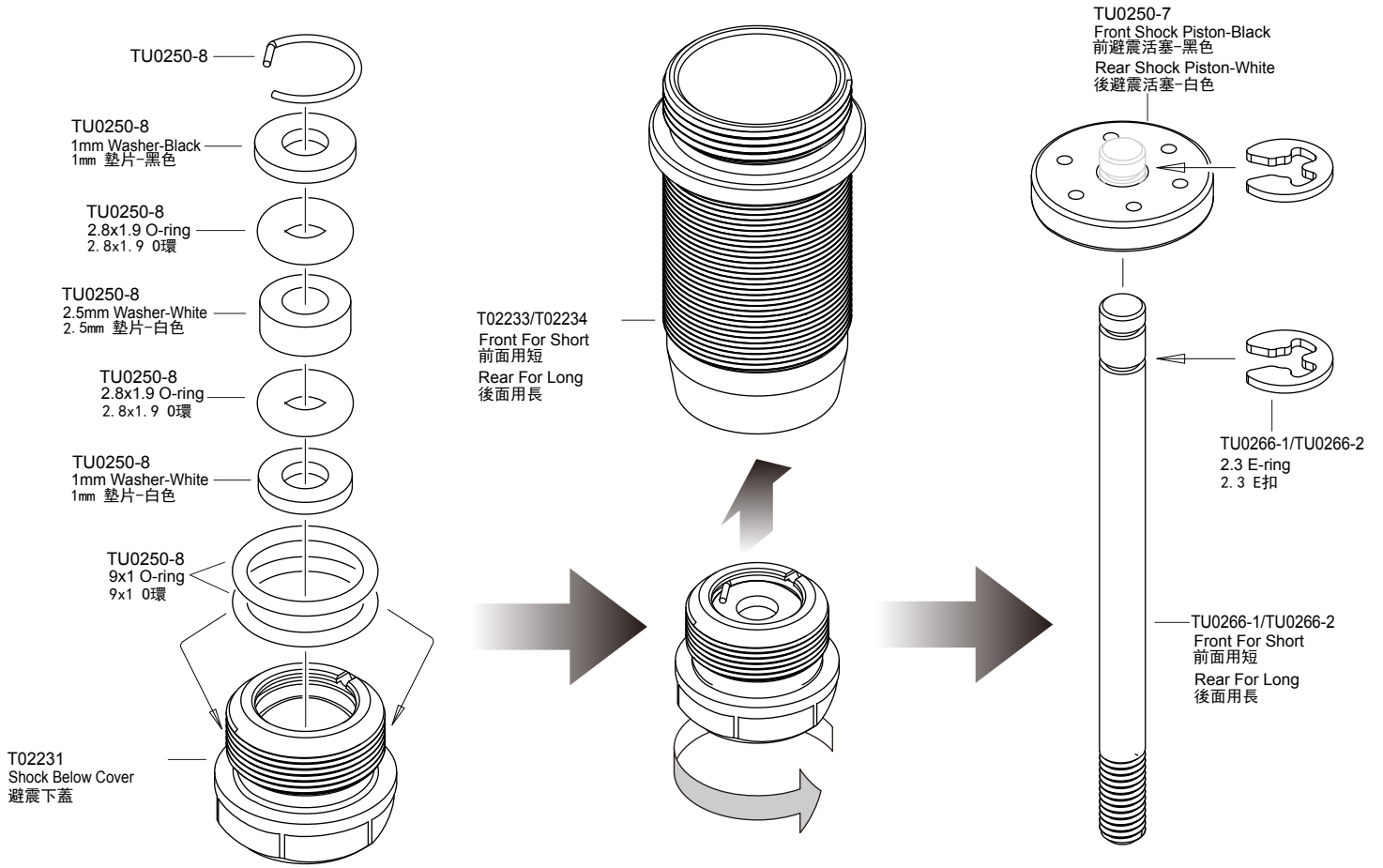

TU0250-8 2.8x1.9 O-ring 2.8x1.9 O環	8
TU0250-8 1mm Washer-White 1mm 墊片-白色	4
TU0250-8 2.5mm Washer-White 2.5mm 墊片-白色	4
TU0266-1/TU0266-2 2.3 E-ring 2.3 E扣	8
TU0250-7 Front Shock Piston-Black 前避震活塞-黑色	2
TU0250-7 Rear Shock Piston-White 後避震活塞-白色	2
TU0250-8 Spring 彈簧扣	4
TU0250-8 1mm Washer-Black 1mm 墊片-黑色	4
TU0250-8 9x1 O-ring 9x1 O環	8

31 Shock Absorber 避震器 F/R x2 Bag-E

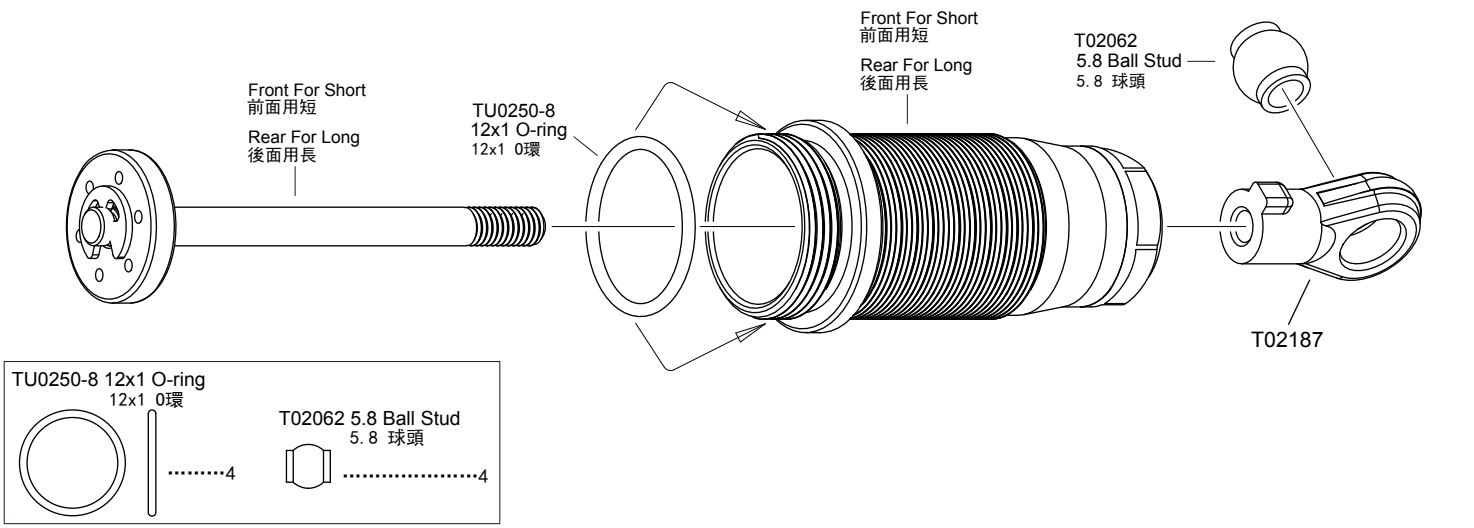

x2 Assemble as many times as specified 需組裝次數

F/R Assemble front and rear sides the same way 前後裝法相同

32 Shock Absorber 避震器

F/R x2 **Bag-E**

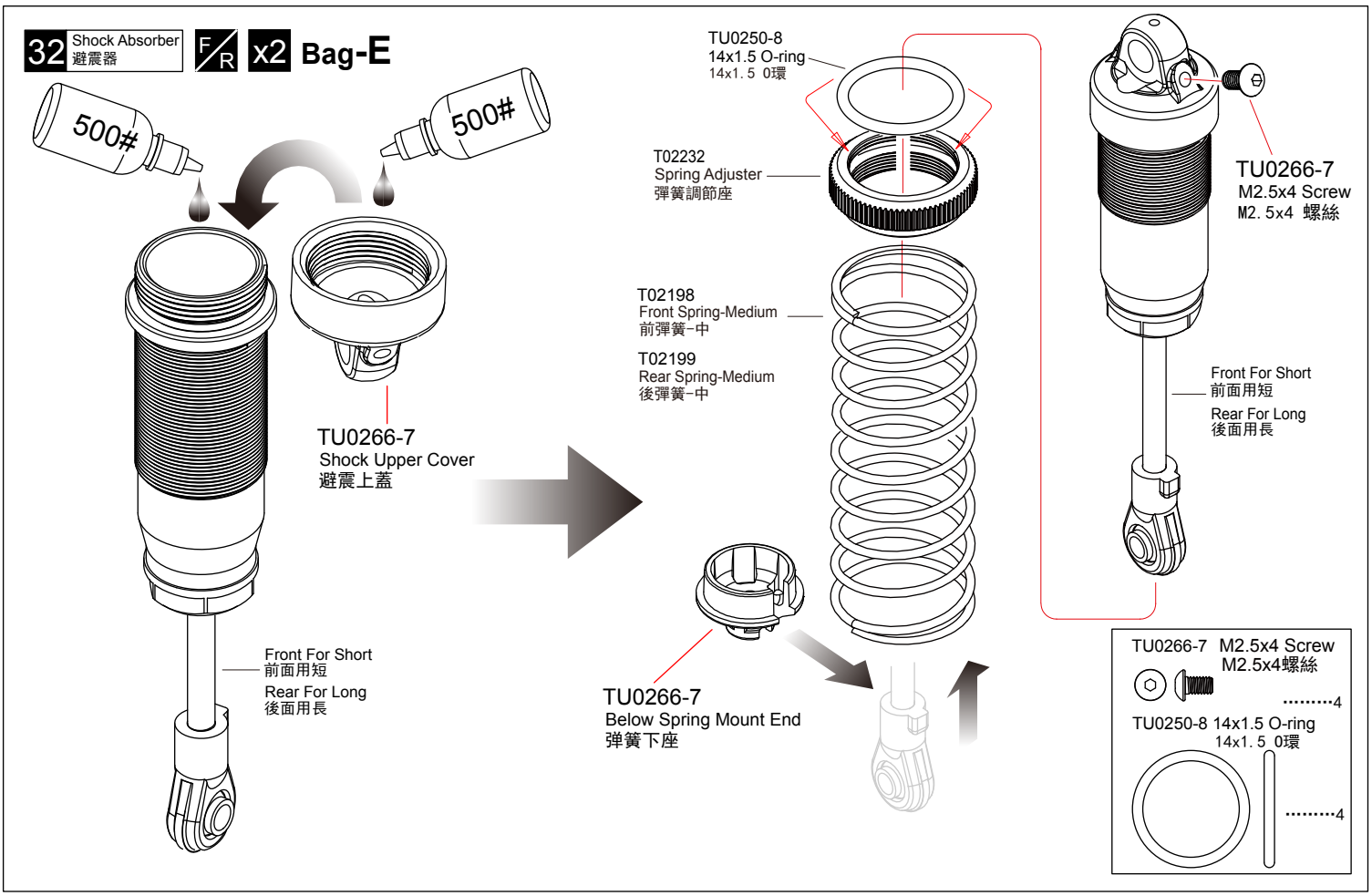

33 Front Shock Absorber 前避震器

L/R **Bag-E**

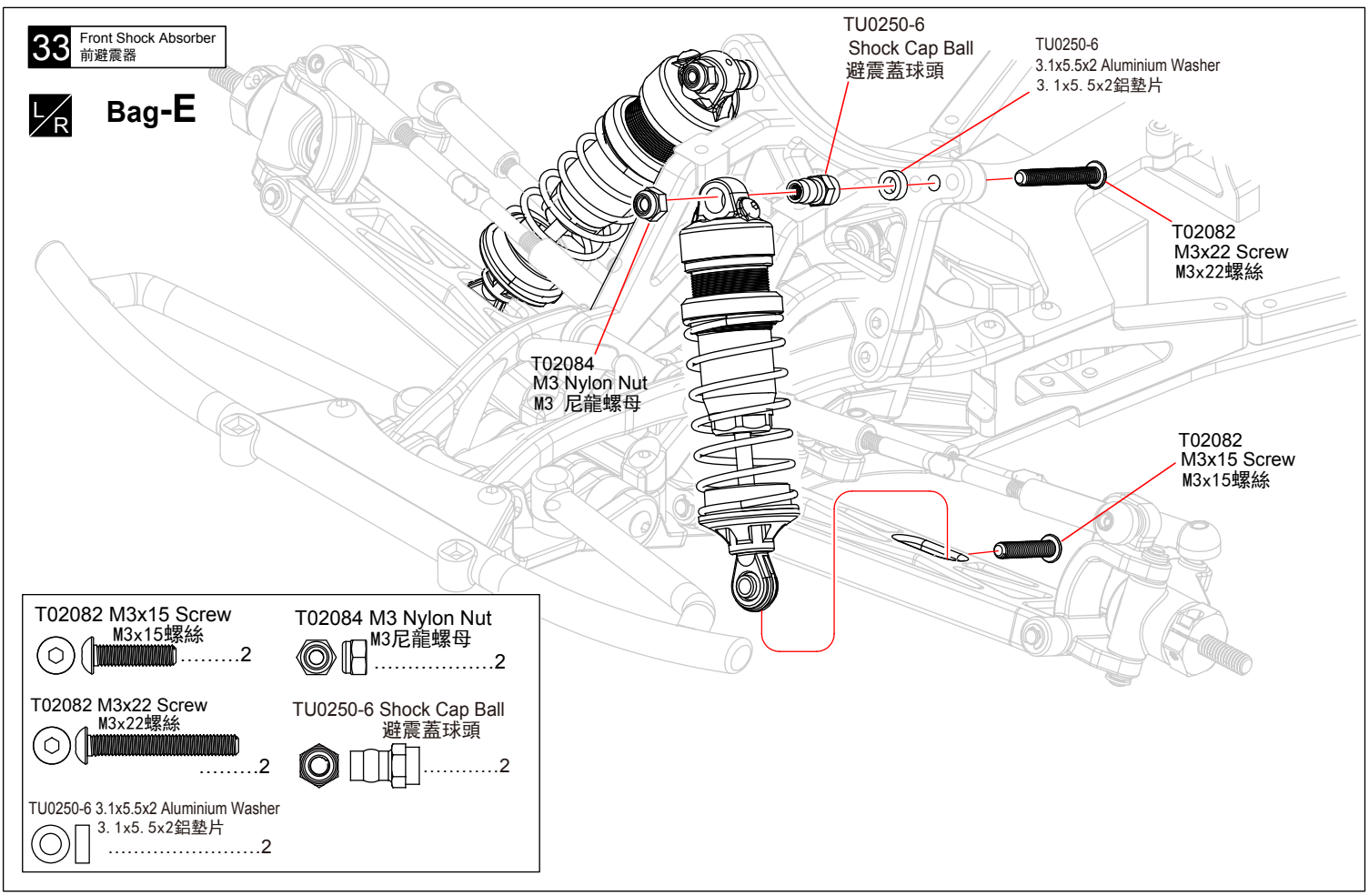

L/R Assemble both Left and Right
組裝左和右

x2 Assemble as many times as specified
需組裝數量

34 Rear Shock Absorber 後避震器

L/R

Bag-E

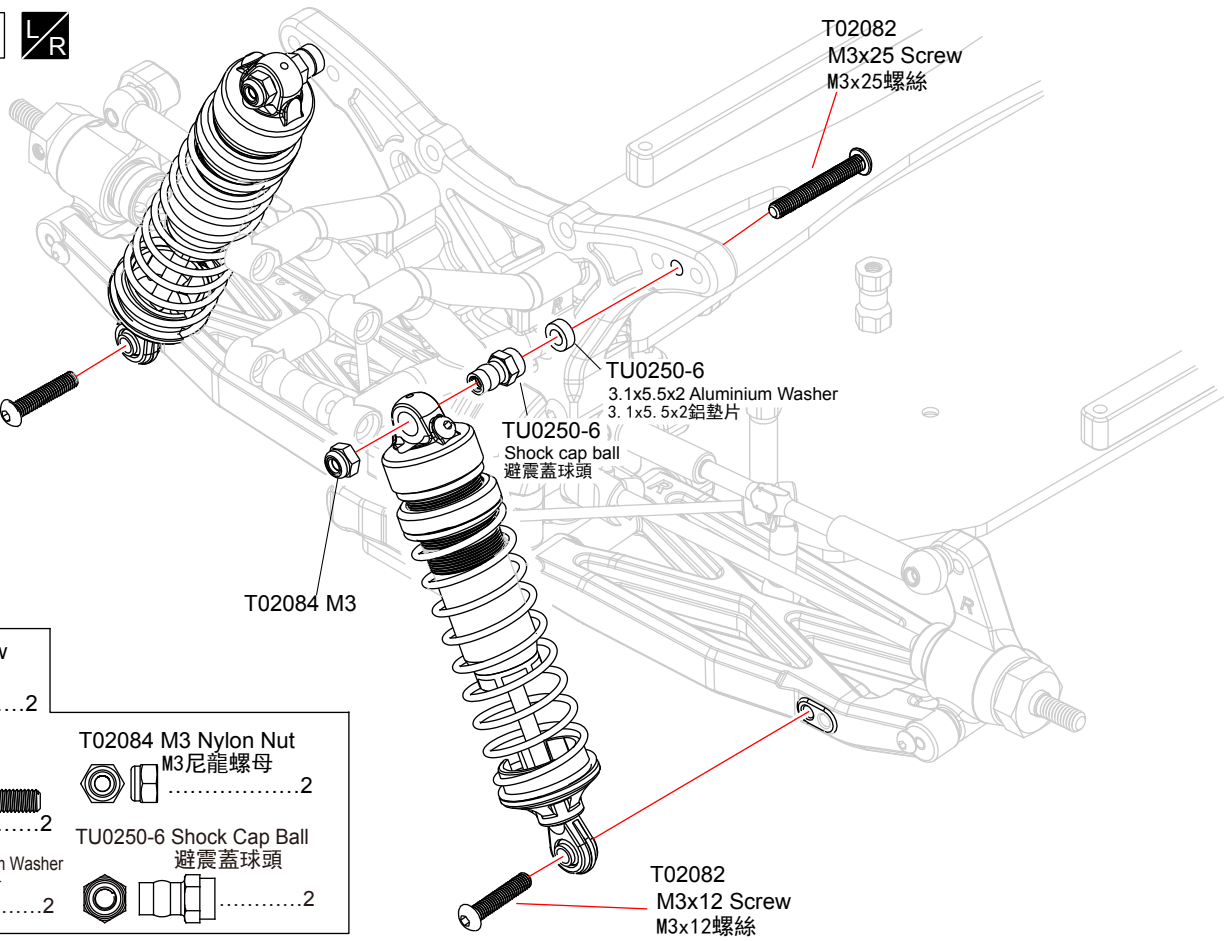

T02082 M3x12 Screw M3x12螺絲	2
T02082 M3x25 Screw M3x25螺絲	2
TU0250-6 3.1x5.5x2 Aluminium Washer 3. 1x5. 5x2鋁墊片	2
T02084 M3 Nylon Nut M3尼龍螺母	2
TU0250-6 Shock Cap Ball 避震蓋球頭	2

35 Rear bumper set 後防撞組

Bag-F

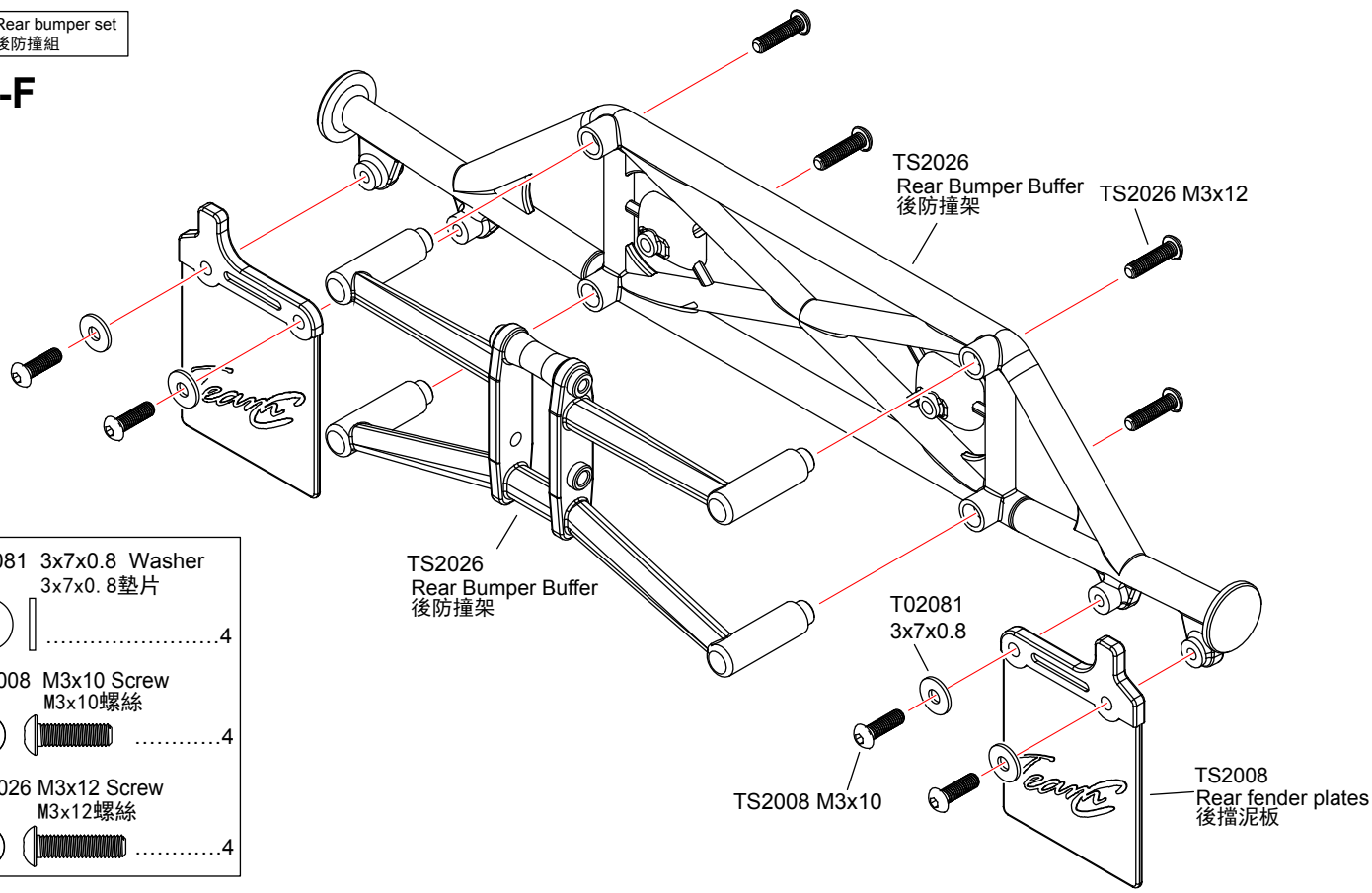

T02081 3x7x0.8 Washer 3x7x0. 8墊片	4
TS2008 M3x10 Screw M3x10螺絲	4
TS2026 M3x12 Screw M3x12螺絲	4

L/R Assemble both Left and Right
組裝左和右

36 Rear bumper set 後防撞組

Bag-F

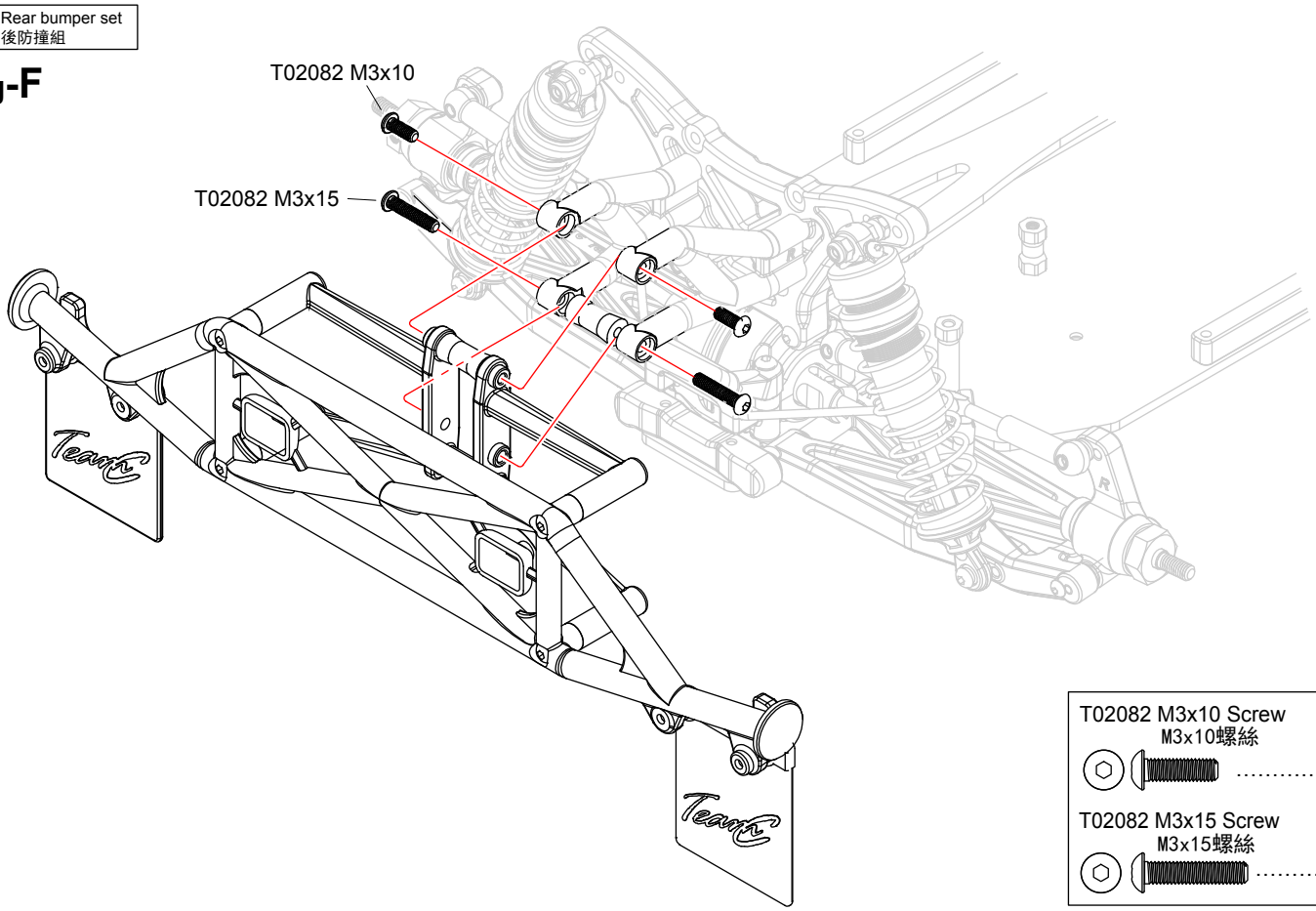

T02082 M3x10 Screw
M3x10螺絲 2

T02082 M3x15 Screw
M3x15螺絲 2

37 Body mount 車殼柱

Bag-F

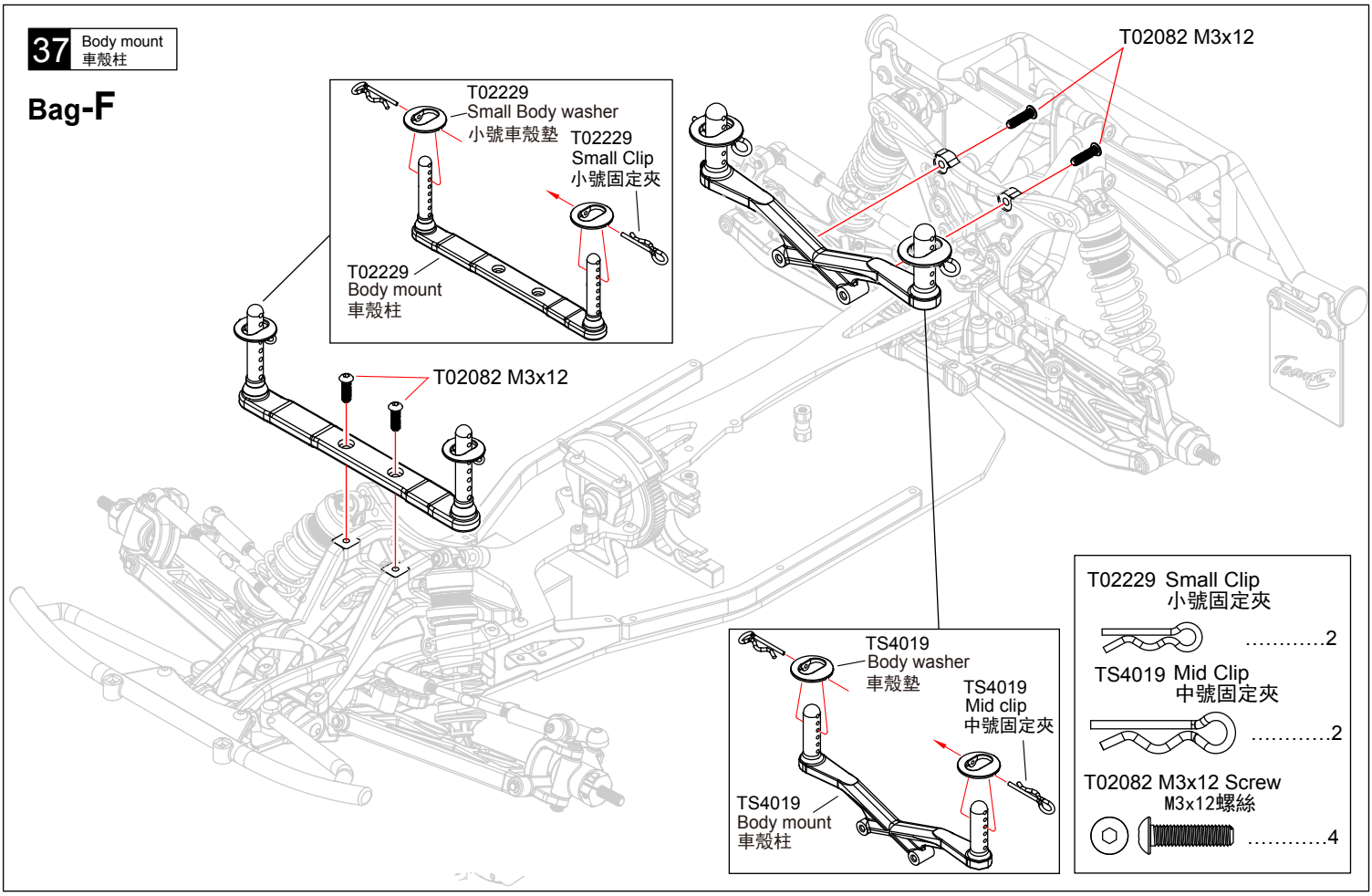

T02229 Small Clip
小號固定夾 2

TS4019 Mid Clip
中號固定夾 2

T02082 M3x12 Screw
M3x12螺絲 4

38 Motor 馬達 Bag-G

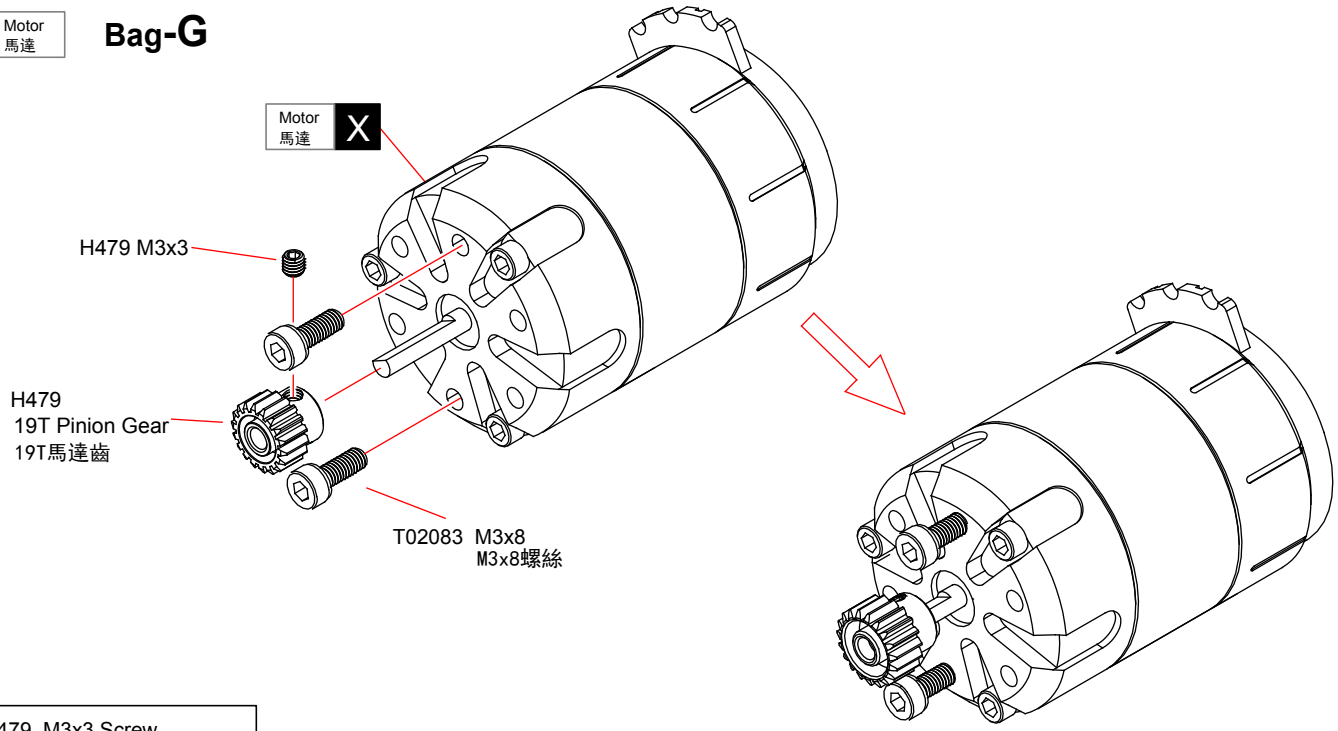

TH479 M3x3 Screw
M3x3螺絲
.....1

T02083 M3x8 Screw
M3x8螺絲
.....2

Gear Ratio 齒輪比	12.5	11.8	11.18	10.63	10.12	9.66	9.24
Pinion Gear 馬達齒	17T	18T	19T	20T	21T	22T	23T

39 Motor 馬達 Bag-G

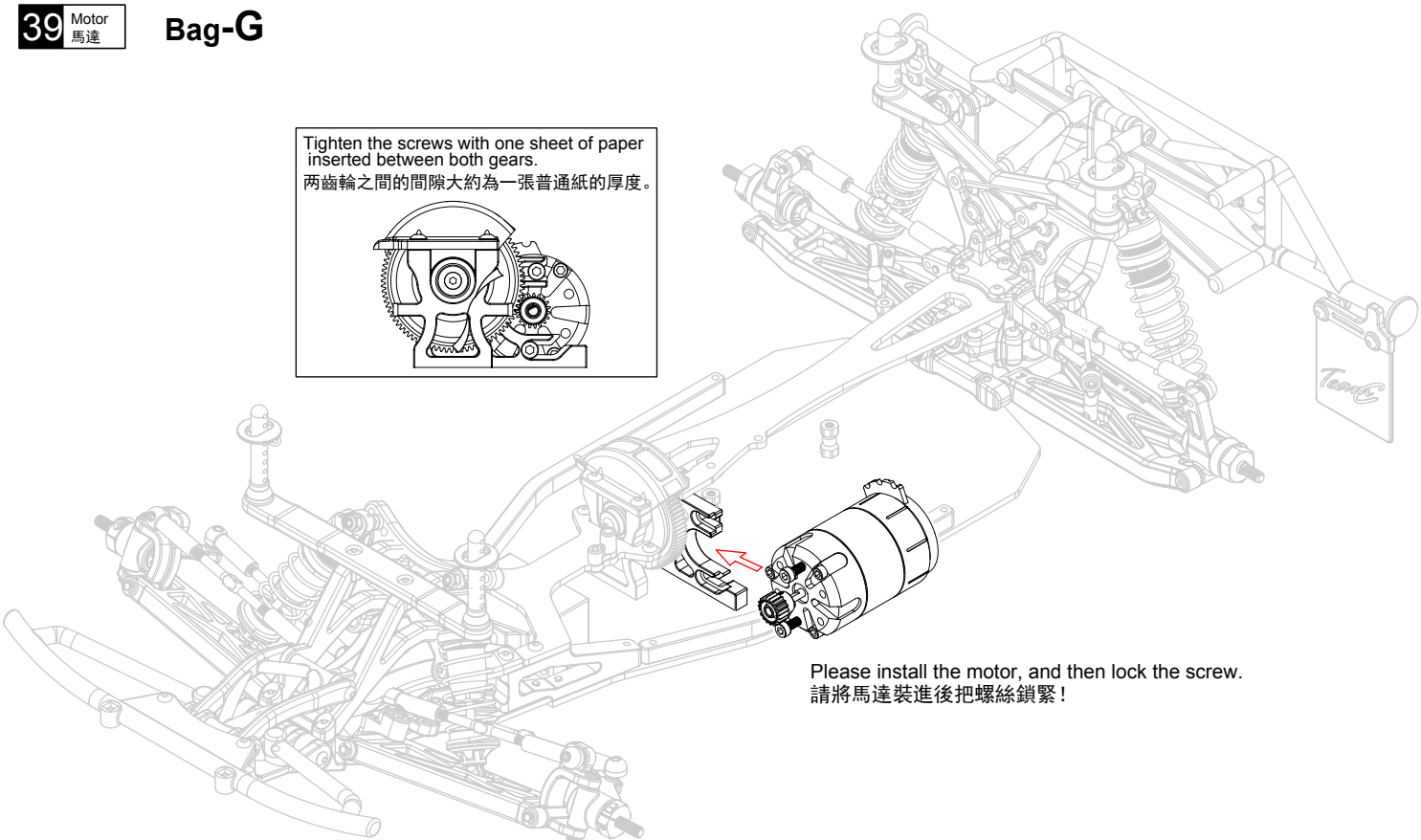

X Must be purchased separately
需另購物品

40 Battery 電池

Bag-G

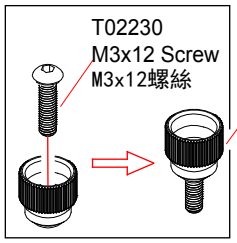

T02230
Adjustment nut
調車尺螺帽

T02228
Battery Bars
電池壓條

Battery 電池 X

T02230 M3x12 Screw
M3x12螺絲
.....2

41 ESC / Receiver 電子變速器/接收機

T02087
Antenna Cap
天線帽

T02087
Antenna Tube
天線管

ESC 電子變速器 X

Receiver 接收機 X

T02087
Double-sided Tape
雙面膠

X Must be purchased separately
需另購物品

42 Tyre 輪胎 x4

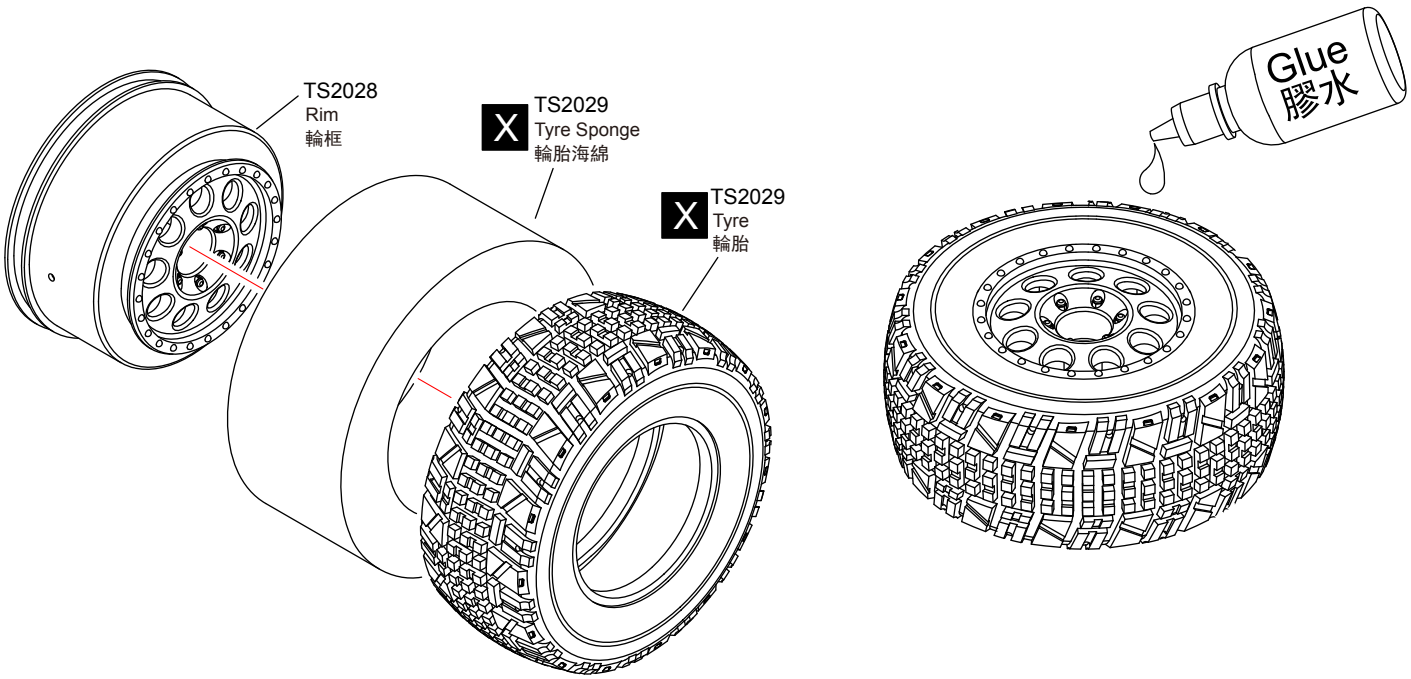

43 Tyre 輪胎 L/R

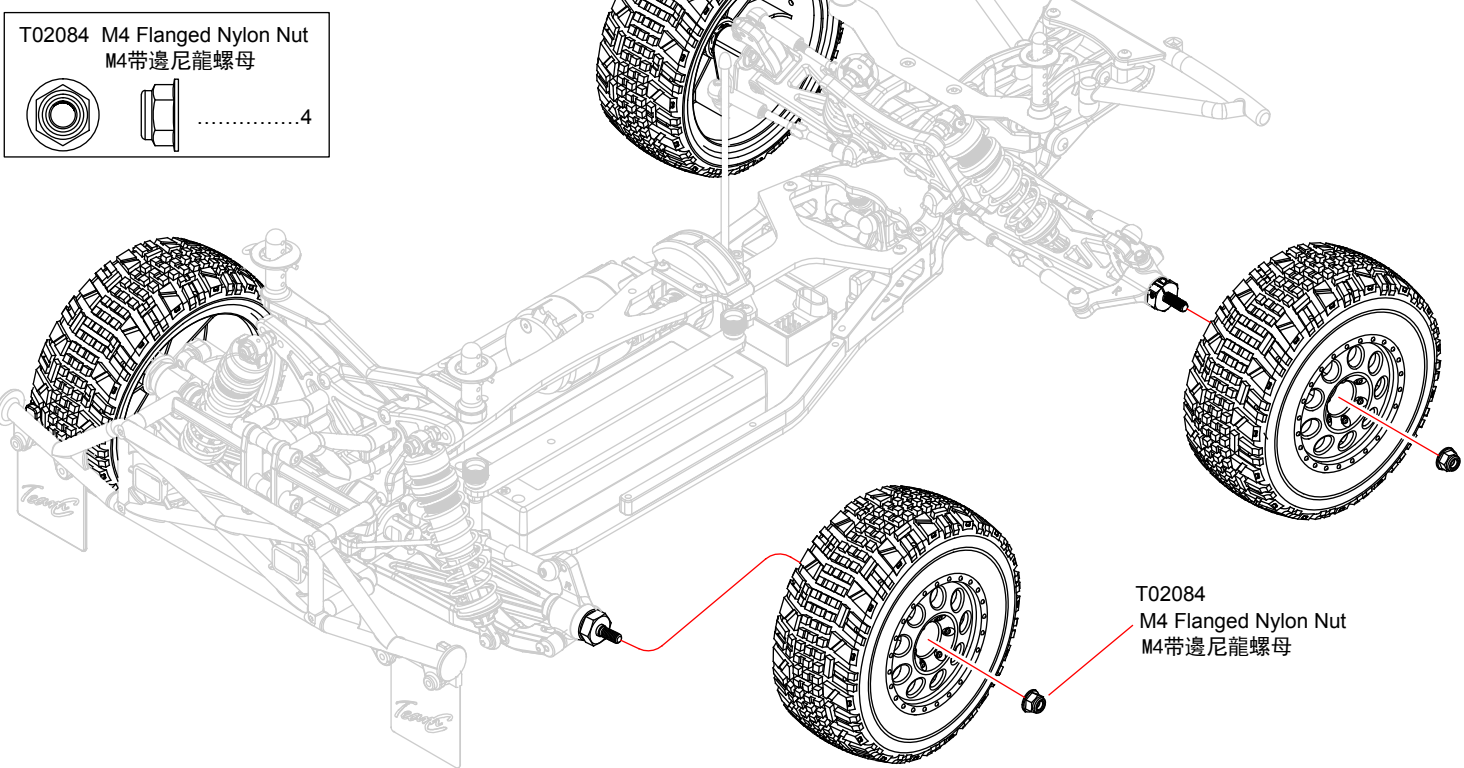

L/R Assemble both Left and Right
組裝左和右

x4 Assemble as many times as specified
需組裝數量

X Must be purchased separately
需另購物品

44 Body 車殼

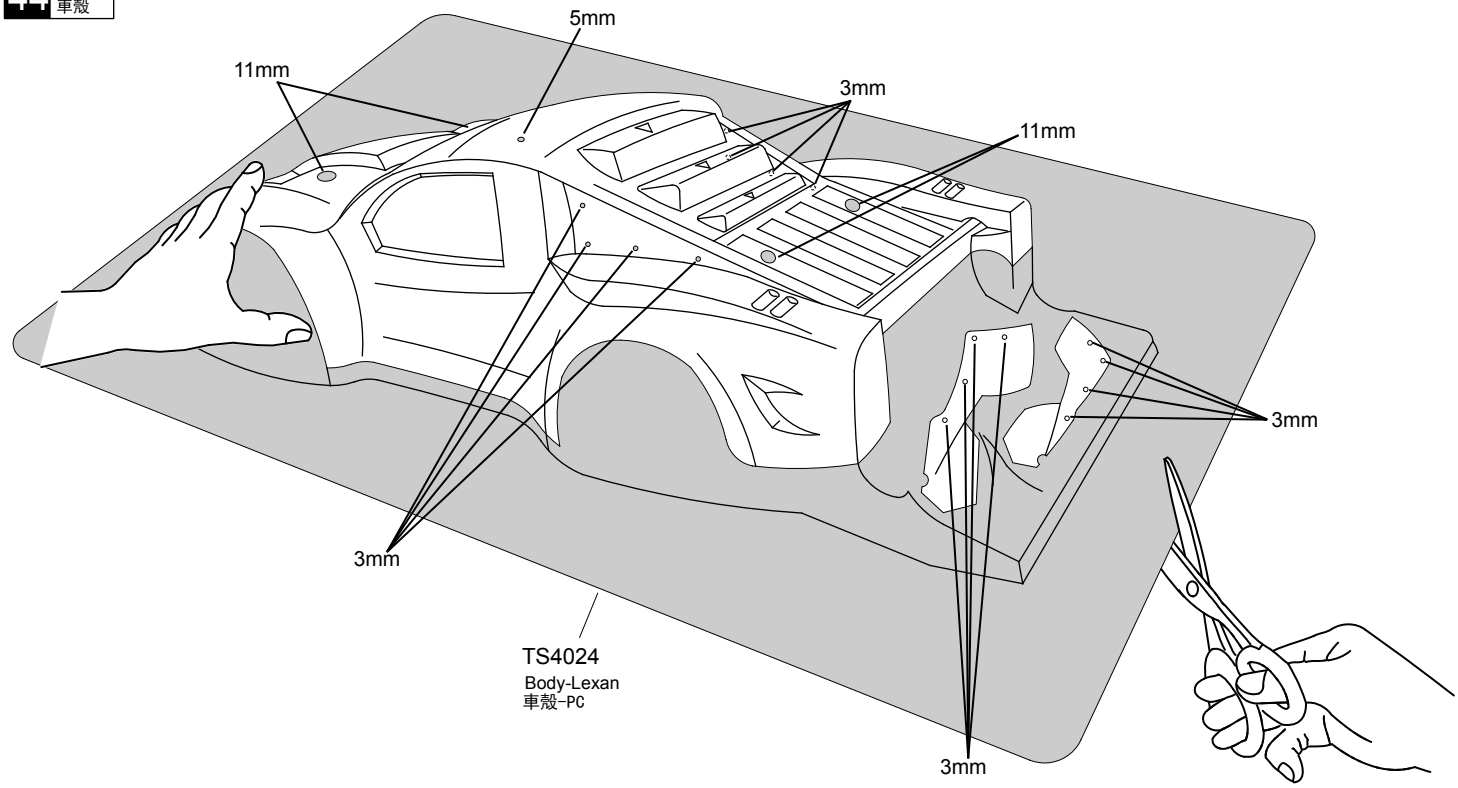

45 Body 車殼

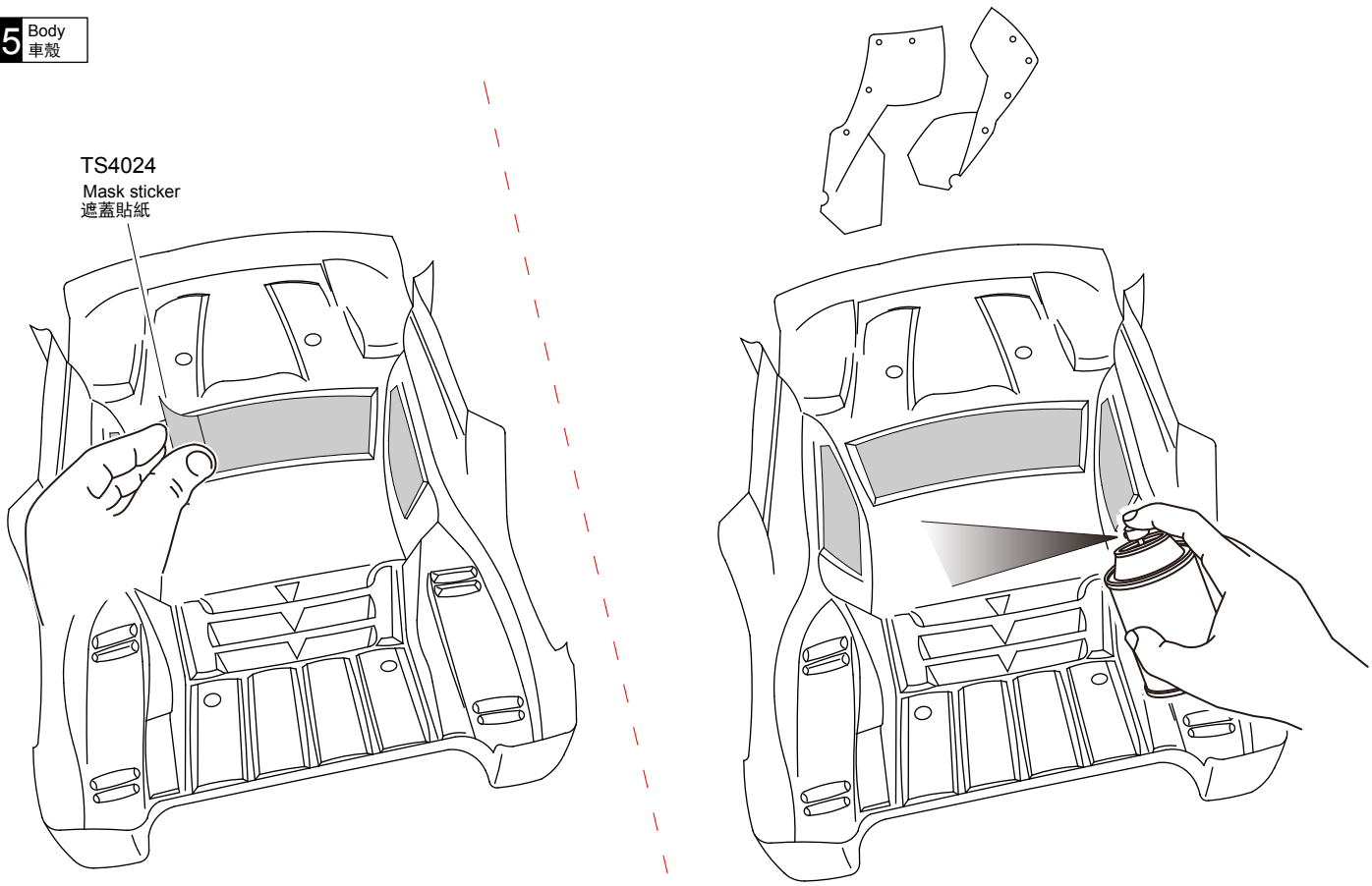

Mask the windows from the inside.
在車窗內壁貼上遮蓋貼紙。

Paint the body shell from the inside using spray colors.
在車殼內壁噴漆。

46 Body 車殼

L/R

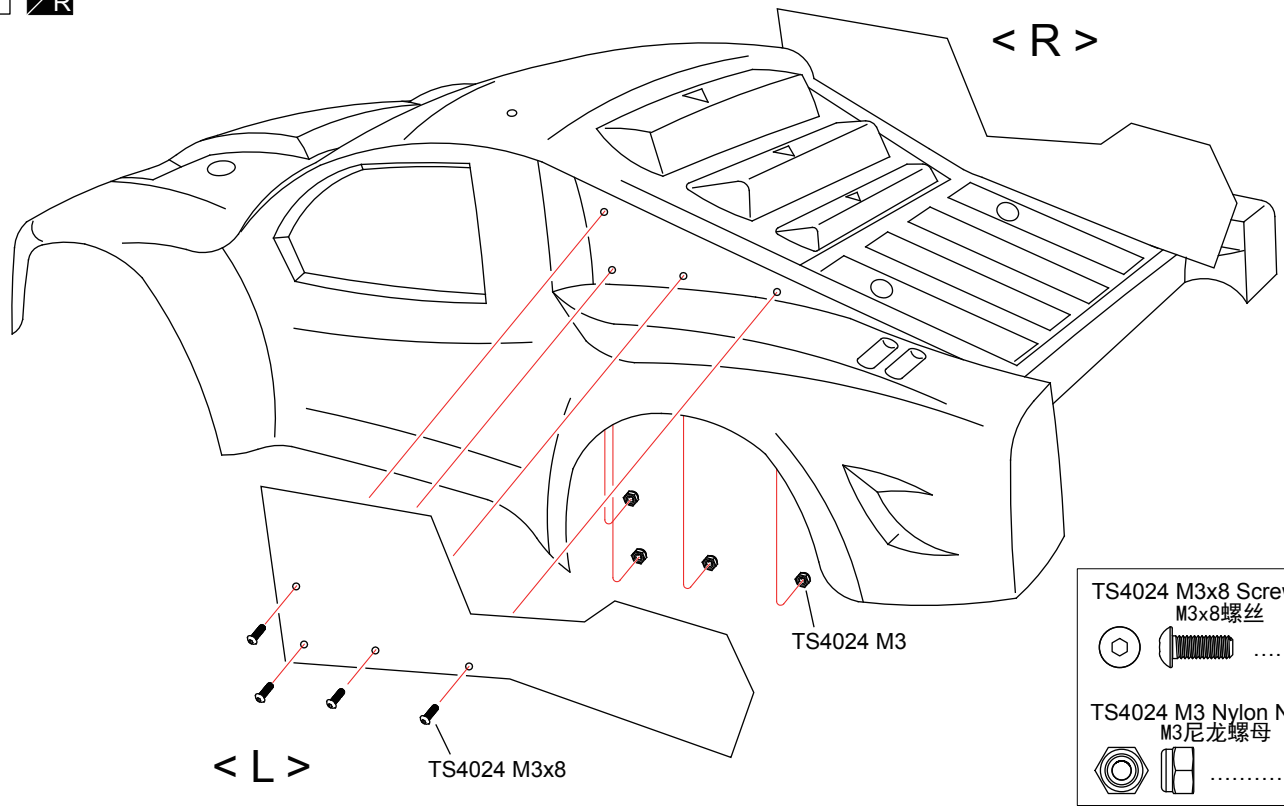

TS4024 M3x8 Screw
M3x8螺丝
.....8

TS4024 M3 Nylon Nut
M3尼龙螺母
.....8

47 Body 車殼

T08660 Small Clip
小号固定夹
.....2

T08660 Mid Clip
中号固定夹
.....2

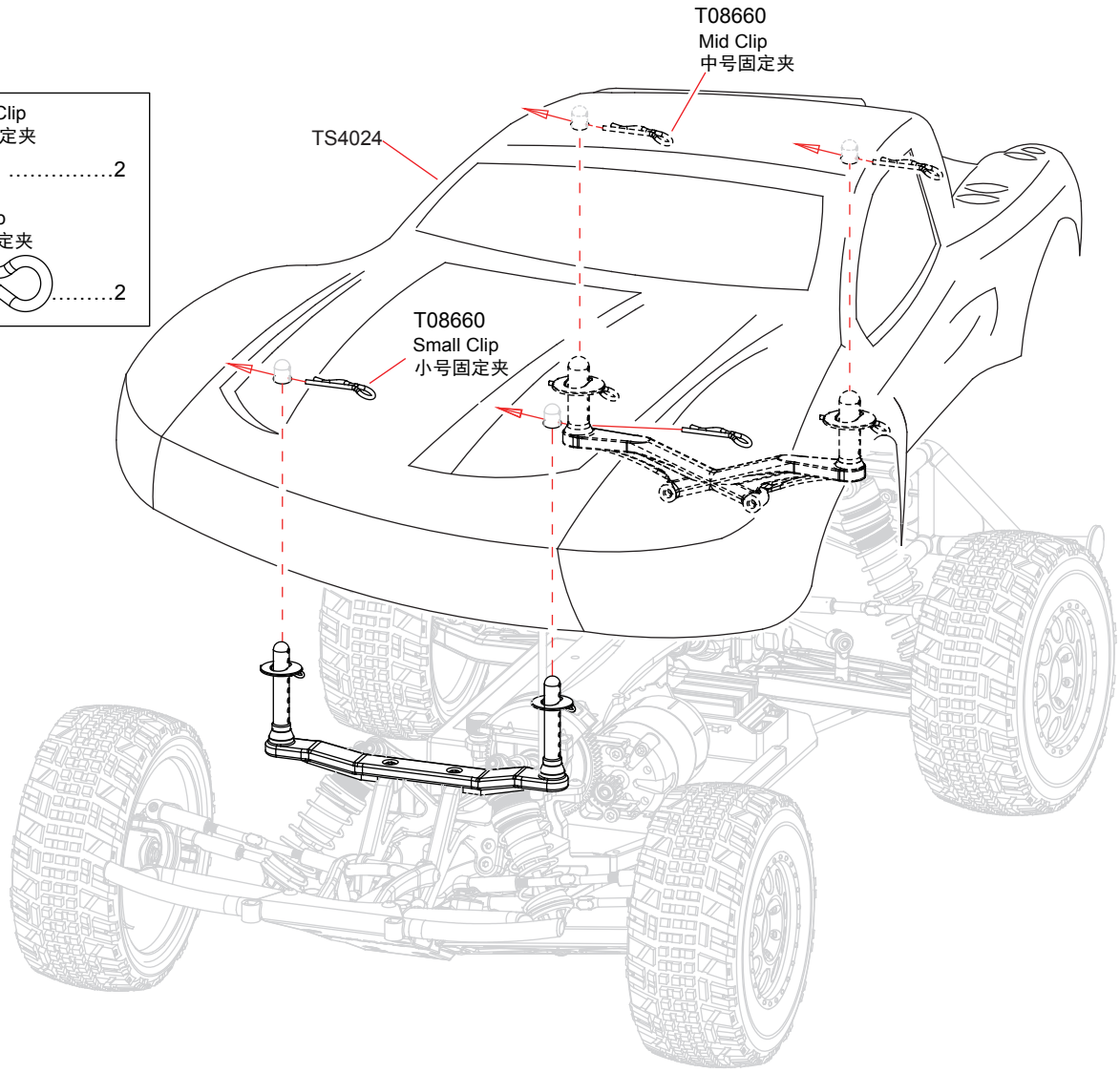

L/R Assemble Both Left And Right
组装左和右

Exploded View
爆炸圖

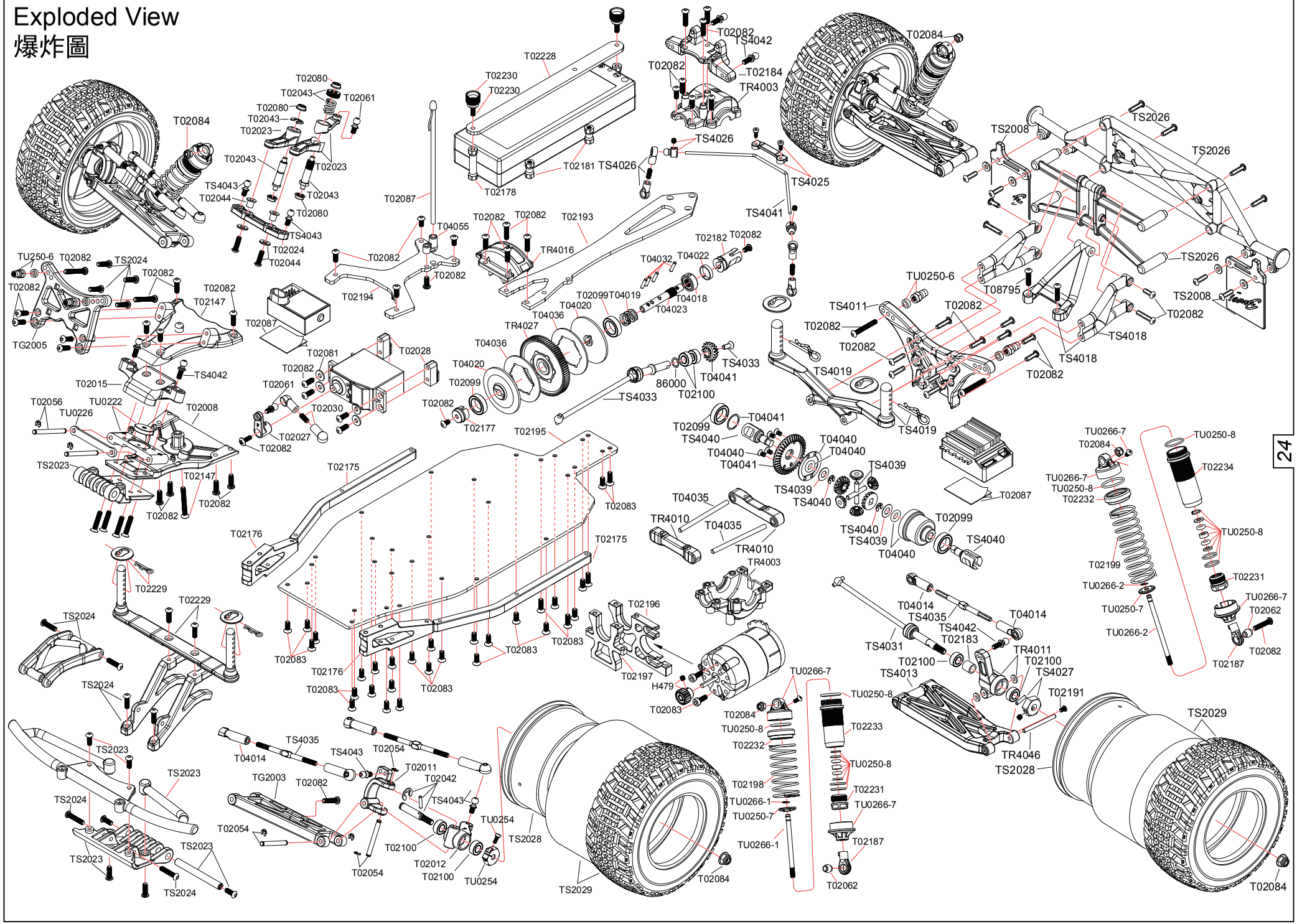

Parts list for TM2 SC off-road buggy - 1 TM2 SC配件包-1

T02193

Top Deck-R
二樓板-R 1pcs

T02194
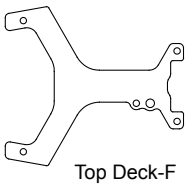
Top Deck-F
二樓板-F 1pcs

T02195
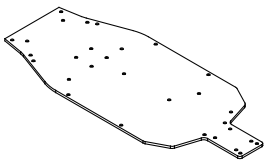
Chassis
底盤 1pcs

T02196
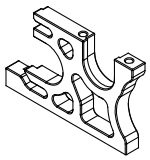
Motor Mount
馬達座 1pcs

T02197
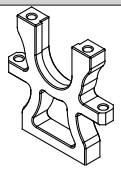
Center Diff Mount
中差座 1pcs

T02198

Front Spring-Medium
前彈簧-中 2pcs

T02199

Rear Spring-Medium
後彈簧-中 2pcs

T02226

12mm Front Big Bore
12㎜前大避震 2pcs

T02227

12mm Rear Big Bore
12㎜後大避震 2pcs

T02228
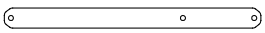
Battery Bars
電池壓條 1pcs

T02229
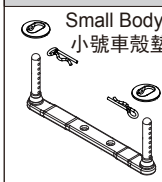
Small Body washer
小號車殼墊 2pcs

Small Clip
小號固定夾
2pcs

Body Mount Set
車殼柱 1pcs

T02230
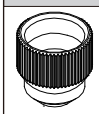
Adjustment nut
調車尺螺帽
2pcs

M3x12 Screw
M3x12螺絲 1pcs

T02231
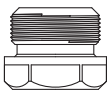
Shock Below Cover
避震下蓋 4pcs

T02232
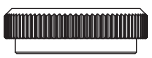
Spring Adjuster
彈簧調節座 4pcs

T02233

Front Shock Absorber Body
前避震器筒身 2pcs

T02234
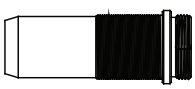
Rear Shock Absorber Body
後避震器筒身 2pcs

T02008
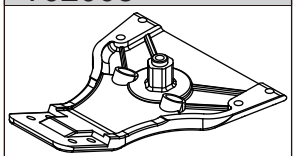
Front chassis plate
(前底盤)
1PCS

T02011
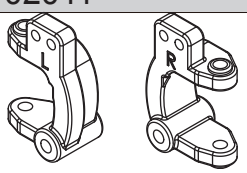
C-type holder L
(C型座-L)
1PCS

C-type holder R
(C型座-R)
1PCS

T02012
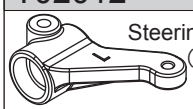
Steering block-L
(轉向臂-L)
1PCS

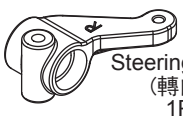
Steering block-R
(轉向臂-R)
1PCS

T02015
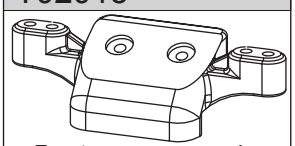
Front upper suspension arm mount
(前上擺臂座)
1PCS

T02019
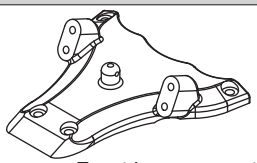
Front brace mount
(前支撐座)
1PCS

T02023

Servo saver upper
(緩沖臂上) 1PCS

Servo saver lower
(緩沖臂下) 1PCS

Servo saver - L
(緩沖臂-L) 1PCS

T02024
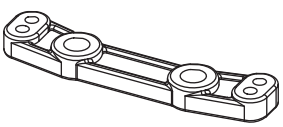
Steering Rack
(緩沖連接片)
1PCS

T02027

Steering Servo horn-F
(轉向伺服臂F) 1PCS

Steering servo horn-H
(轉向伺服臂H) 1PCS

Steering Servo horn-S
(轉向伺服臂S) 1PCS

T02028
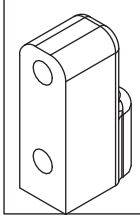
Servo plate
(伺服機座)
2PCS

T02030
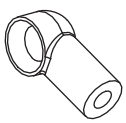

3x10 Screw
(螺絲)
1PCS

4.8 Ball End - Short
(球頭座-短)
2PCS

T02035
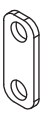
1.0 Servo spacer
(伺服機座墊片)
2PCS

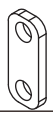
1.5 Servo spacer
(伺服機座墊片)
2PCS

T02042

4.0 E-ring
(E扣) 2PCS

2x9.8 Pin
(鋼針) 2PCS

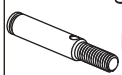
Front wheel axle
(前輪軸)
2PCS

T02043OR
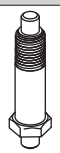
Buffer column-A
(轉向緩沖器支柱A) 1PCS

Buffer Spring
(緩沖彈簧)
1PCS

Buffer column-B
(轉向緩沖器支柱B) 1PCS

Buffer Nut
(緩沖調整螺帽)
1PCS

4.0 E-ring
(E扣) 1PCS

T02044
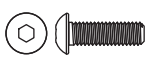
3x10 Screw
(螺絲) 2PCS

Block Carrier
(緩沖鋼套)
2PCS

3x7x0.8 Washer
(墊片) 2PCS

T02054

2.3 E-ring
(E扣)
4PCS

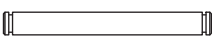
3x27.5 Hinge pin front outer
(前擺臂銷-外)
2PCS

T02056

2.3 E-ring
(E扣)
4PCS

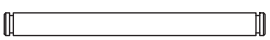
3x34.5 Hinge pin front inner
(前擺臂銷-內)
2PCS

T02061
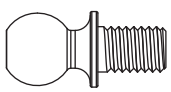
Ball stud -silver
(球頭-銀色)
2PCS

T02062

5.8x6 Ball stud
(球頭)
4PCS

Parts list for TM2 SC off-road buggy - 2 TM2 SC配件包-2

T02080

3x6x2.5 Ball Bearing
(軸承)
4PCS

T02081

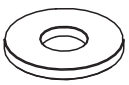

3x7x0.8 Washer
(墊片)
10PCS

T02082

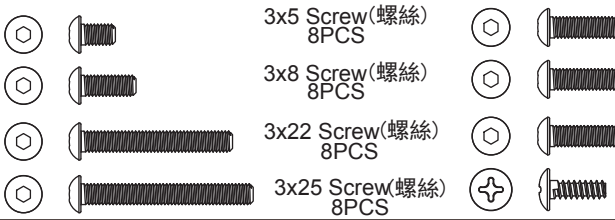

3x5 Screw(螺絲) 8PCS
3x8 Screw(螺絲) 8PCS
3x22 Screw(螺絲) 8PCS
3x25 Screw(螺絲) 8PCS
3x15 Screw(螺絲) 8PCS
3x12 Screw(螺絲) 8PCS
3x10 Screw(螺絲) 8PCS
2.6x8 Screw(螺絲) 8PCS

T02083

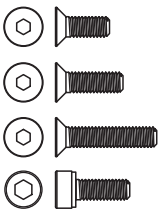

3x8 Screw (螺絲)8PCS
3x10 Screw (螺絲)8PCS
3x15 Screw (螺絲)8PCS
3x8 Screw (螺絲)8PCS

T02084

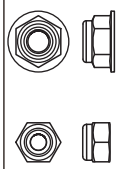

M4 Flanged Nylon Nut (帶邊尼龍螺母)
6PCS

M3 Nylon Nut
(尼龍螺母)
6PCS

T02085

2.3 E-ring
(E扣)
8PCS

4 E-ring
(E扣)
8PCS

T08660

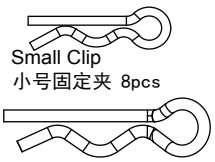

Small Clip
小号固定夹 8pcs

Mid Clip
中号固定夹 8pcs

T02087

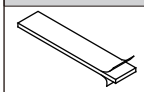

Double-sided tape
(雙面膠) 1PCS

Antenna pipe set cover
(天線管帽)
1PCS

Antenna pipe set
(天線套管) 1PCS

T02099

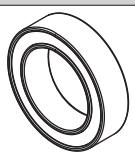

10x15x4 Ball Bearing
(軸承)
6PCS

T02100

5x10x4 Ball Bearing
(軸承)
6PCS

T02147

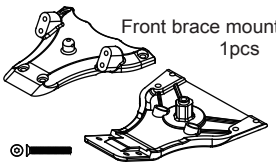

Front brace mount
1pcs

M3x25
1pcs

Front chassis plate
1pcs

T02175

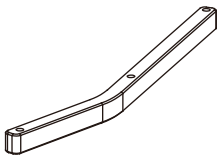

Reinforcing Bars
側邊補強條 2pcs

T02176

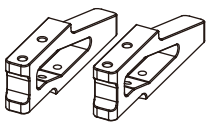

Front Chassis Mount
前底盤固定座 1pcs

T02177

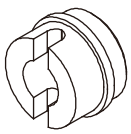

Center Bearing Insert
中差培林座 1pcs

T02178

Battery Post
電池柱 2pcs

T02181

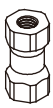

Battery Post -Short
電池檔柱 2pcs

T02182

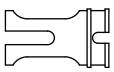

Mid Connecting Hub-F
中接杯-前1pcs

T02183

Rear Bearing Collar
後輪軸套 2pcs

T02184

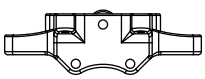

Rear
1pcs

Upper Suspension Arm Mount
後上擺臂座

T02187

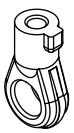

5.8 Ball End
球頭座 4pcs

T02191

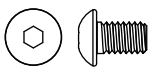

M2.5x4 Screw
M2.5x4螺絲 8pcs

T04014

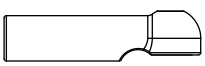

4.8mm Ball End - Long
4. 8mm球頭座-長 6pcs

T04018

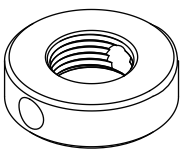

Slipper Nut
扭限螺母 1pcs

T04019

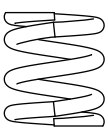

Slipper Spring
扭限弹簧 1pcs

T04020

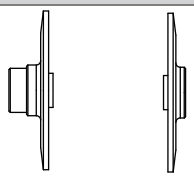

Slipper Hub-F
扭限座-前1pcs

Slipper Hub-R
扭限座-後1pcs

T04022

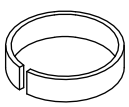

Spring Buckle
弹簧扣 1pcs

T04023

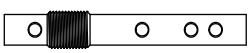

Center Shaft
中軸 1pcs

T04032

2x9.8 Pin
2x9. 8鋼針 6pcs

T04035

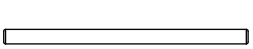

3x51 Arm Pin
3x51擺臂軸 2pcs

T04036

Slipper Pad
扭限摩擦片
2pcs

T04040

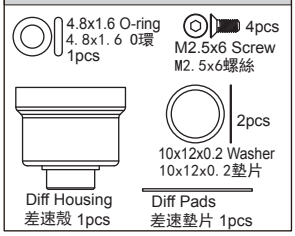

4.8x1.6 O-ring
4. 8x1. 6 O環
1pcs

4pcs
M2.5x6 Screw
M2. 5x6螺絲

2pcs
10x12x0.2 Washer
10x12x0. 2墊片

Diff Housing
差速殼 1pcs

Diff Pads
差速墊片 1pcs

T04041

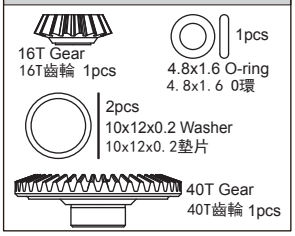

16T Gear
16T齒輪 1pcs

1pcs
4.8x1.6 O-ring
4. 8x1. 6 O環

2pcs
10x12x0.2 Washer
10x12x0. 2墊片

40T Gear
40T齒輪 1pcs

T04055

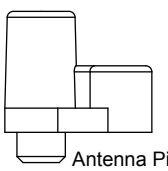

Antenna Pipe Mount
天線管座 1pcs

Parts list for TM2 SC off-road buggy - 3 TM2 SC配件包-3

TR4003

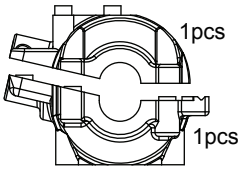

Rear Gear-box
後齒輪箱

TR4010

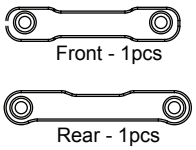

Rear Arm Mount
後擺臂固定座

TR4011

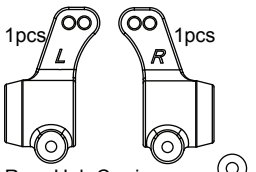

Rear Hub Carriers
後輪座

TR4016

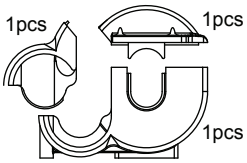

Center Gear-box
中齒輪箱

TR4027

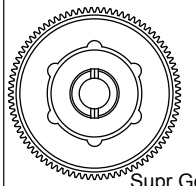

Supr Gear-85T
減速齒-85T 1pcs

TR4046

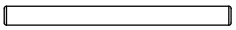

2.5x30 Arm Pin
2. 5x30擺臂軸 2pcs

TR4057

10x12x0.2 Washer
10x12x0. 2墊片

TS2008

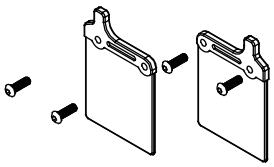

Rear Fender Plates 1Set
後擋泥板

TS2023

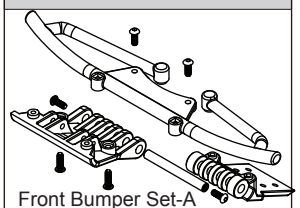

Front Bumper Set-A
前防撞組-A

TS2024

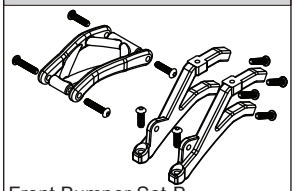

Front Bumper Set-B
前防撞組-B

TS2026

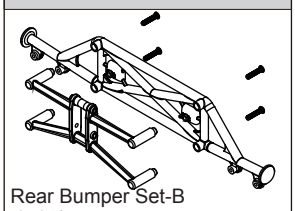

Rear Bumper Set-B
後防撞組-B

TS2028

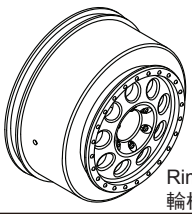

Rim
輪框 2pcs

TS2029

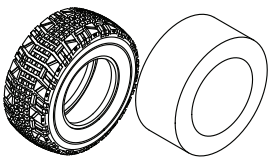

Tyre
輪胎 2pcs

Tyre Sponge
輪胎海綿 2pcs

TS4011

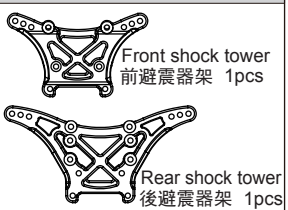

TS4013

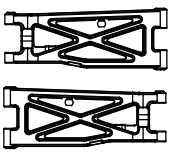

Rear lower arm
後下擺臂

TS4018

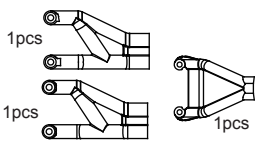

Rear bumper stick
後防撞架

TS4019

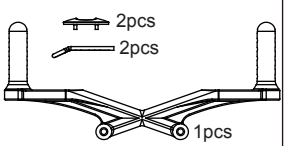

Body mount
車殼柱

TS4024

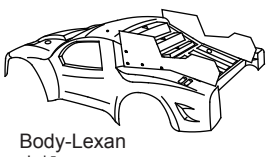

Body-Lexan
車殼-PC 1pcs

TS4025

Swaybar mount
防傾桿座 2pcs

TS4026

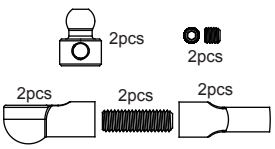

Swaybar ball set
防傾桿球頭組

TS4027

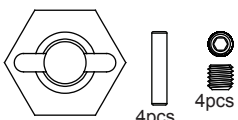

Hex mount
六角座

TS4031

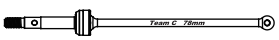

78mm rear CVD
78mm後CVD 2pcs

TS4033

105mm center rear CVD
105mm中後CVD 1pcs

TS4035

3x56 Turnbuckle
3x56拉桿 2pcs

TS4039

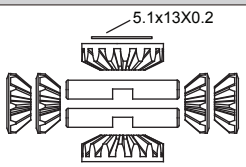

Gear Set
齒輪組

TS4040

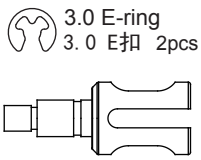

Diff Connecting Cup
差速接杯 2pcs

TS4041

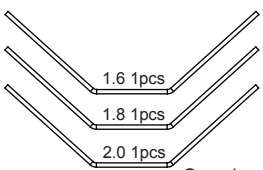

Swaybar
防傾桿

TS4042

Ball stud-long
球頭-長 6pcs

TS4043

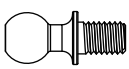

Ball stud-short
球頭-短 6pcs

Tu0222

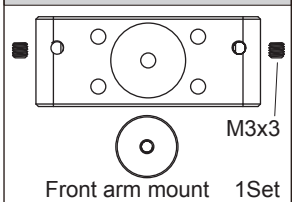

Front arm mount 1Set
前擺臂固定座

Tu0226

Front hinge pin brace
前擺臂固定片 1pcs

TU0250-6

3.1x5.5x2.0 Aluminium Washer
3. 1x5. 5x2. 0铝墊片

Shock cap ball
避震蓋球頭

TU0250-8

1mm Washer-White
1mm压墊-白色
4pcs

1mm Washer-Black
1mm压墊-黑色
4pcs

2.5mm Washer-White
2. 5mm压墊-白色 4pcs

Spring
弹簧
4pcs

2.8x1.9 O-Ring
2. 8x1. 9 O環
4pcs

9x1 O-Ring
9x1 O環
4pcs

12x1 O-Ring
12x1 O環
4pcs

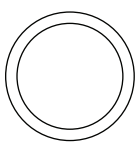

14x1.5 O-Ring
14x1. 5 O環
4pcs

Parts list for TM2 SC off-road buggy - 4　TM2 SC配件包-4

TU0250-7

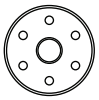
Front Piston-Black
前活塞-黑色
2pcs

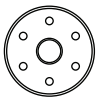
Rear Piston-White
後活塞-白色
2pcs

TU0254

2x5 Screw
螺絲 4pcs

Hex mount
六角座 4pcs

5.1x8x0.2 Washer
墊片 12pcs

TU0266-7

Below Spring mount end-plastic
彈簧下座-尼龍 4pcs

Shock Absorber Top cover-plastic
避震器上蓋-尼龍 4pcs

M2.5x4 Screw
M2.5x4螺絲4pcs

TU0266-1

2.3 E-Ring
2.3 E扣
4pcs

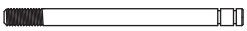
Front Shock Absorber Shaft
前避震器軸 2pcs

TU0266-2

2.3 E-Ring
2.3 E扣
4pcs

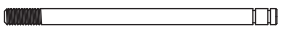
Rear Shock Absorber Shaft
後避震器軸 2pcs

86000

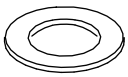
5.1x8x0.2 Washer
5.1x8x0.2墊片 6pcs

TG2005

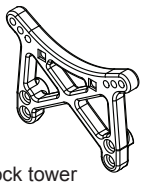
Front shock tower
前避震支架 1pcs

TG2003

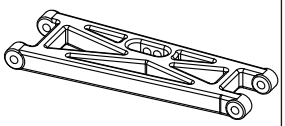
Front lower arms
前下擺臂 2pcs

T08795

M3x18 Button head hex screw
M3x18半圓頭內六角螺絲
8pcs

Tu0219 OP

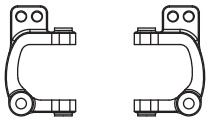
C-Type-Holder 25 Degree - L
25° C型座-L

C-Type-Holder 25 Degree - R
25° C型座-R

Tu0220 OP

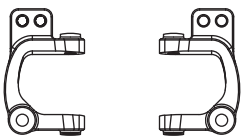
C-Type-Holder 30 Degree - L
30° C型座-L

C-Type-Holder 30 Degree - R
30° C型座-R

Tu0224 OP

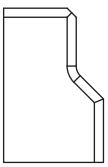
Servo mount 2pcs
伺服機固定座

Tu0243 OP

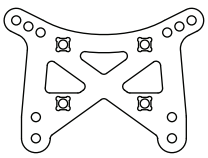
Carbon Front Shock Tower-Truck
碳纖前避震架-卡車 1pcs

TU0250-5 OP

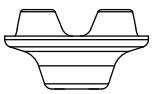
Below Spring mount end
彈簧下座 4pcs

TU0262-F OP

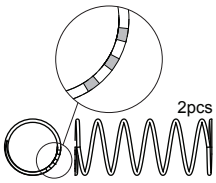
2pcs
Front Shock Absorber Spring-Soft
前避震器彈簧-軟

TU0422 OP

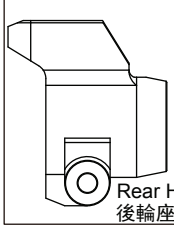
2pcs
Washer 4pcs
Rear Hub Carriers
後輪座 2pcs

TU0423 OP

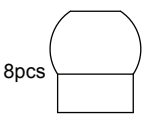
8pcs
Rear Arm Mount-Ball
後擺臂固定座-球珠

TU0418 OP

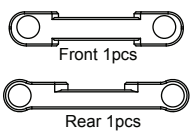
Front 1pcs
Rear 1pcs
4pcs
Rear Arm Mount
後擺臂固定座

H475 OP

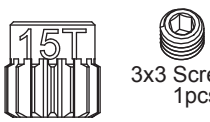

3x3 Screw
1pcs
Aluminium Motor Gear - 15T
鋁合金馬達齒 - 15T 1pcs

H476 OP

3x3 Screw
1pcs
Aluminium Motor Gear - 16T
鋁合金馬達齒 - 16T 1pcs

H477 OP

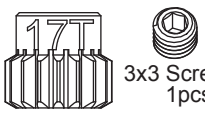

3x3 Screw
1pcs
Aluminium Motor Gear - 17T
鋁合金馬達齒 - 17T 1pcs

H478 OP

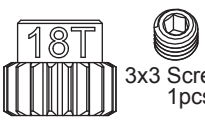

3x3 Screw
1pcs
Aluminium Motor Gear - 18T
鋁合金馬達齒 - 18T 1pcs

H479 OP

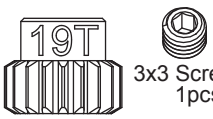

3x3 Screw
1pcs
Aluminium Motor Gear - 19T
鋁合金馬達齒 - 19T 1pcs

H479 OP

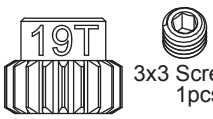

3x3 Screw
1pcs
Aluminium Motor Gear - 19T
鋁合金馬達齒 - 19T 1pcs

H480 OP

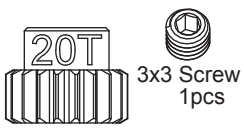

3x3 Screw
1pcs
Aluminium Motor Gear - 20T
鋁合金馬達齒 - 20T 1pcs

H482 OP

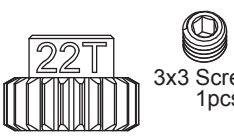

3x3 Screw
1pcs
Aluminium Motor Gear - 22T
鋁合金馬達齒 - 22T 1pcs

TM2 SC

SETUP SHEET for the TeamC TM2 SC

Driver _____

Track / City _____

Event _____ *Date* ____ / ____ / ____

Conditions

☐ Smooth ☐ Bumpy ☐ Low traction ☐ Med traction

☐ High traction ☐ Sandy ☐ Soft dirt ☐ Grass ☐ Hard soil

☐ Clay ☐ Wet ☐ Dry ☐ Dusty ☐ Other

Front Suspension

Shock Mounting&Camber link

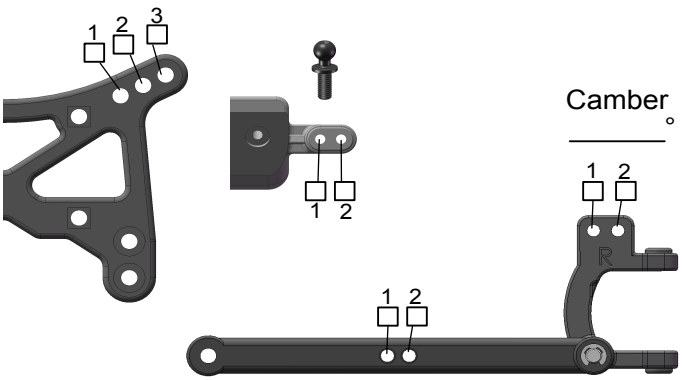

Toe-in (+)/Out (-) _____ °

Bump Steep Spacer _____

Camber _____ °

Caster
☐ 25°
☐ 30°

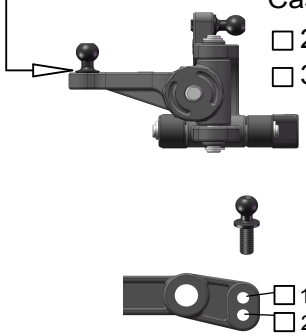

Ride height _____

Front Shocks

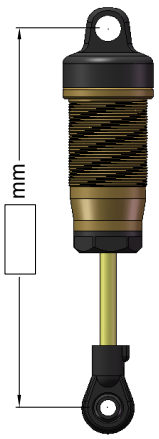

Spring(color)
☐ Black
☐ _____

Oil _____

Piston # _____

Rear Suspension

Shock Mounting&Camber link

Anti-roll bar: ☐ _____ mm

Camber _____ °

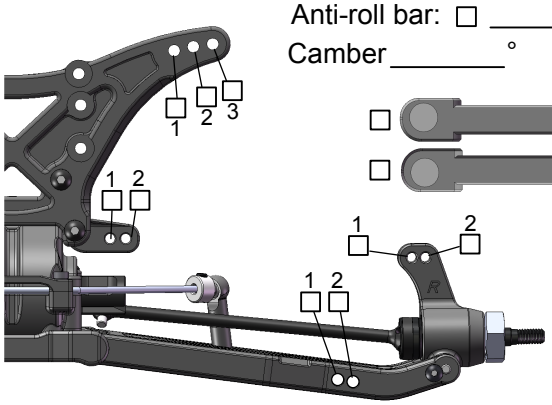

Wheelbase
☐ Long
☐ Medium
☐ Short

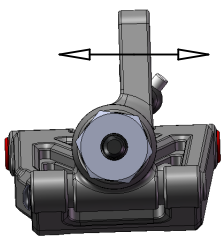

Ride height _____

Rear Shocks

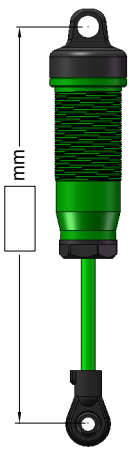

Spring(color)
☐ Black
☐ _____

Oil _____ wt

Piston # _____

Front Tires&Wheels

Front Tires _____

Inserts _____ Wheels _____

Rear Tires&Wheels

Rear Tires _____

Inserts _____ Wheels _____

Diff

Brand _____

Oil wt _____

Radio/Batteries

Servo _____

Esc _____

Batteries _____

Motor

Motor _____

Pinion/Spur _____ / _____

Comments

Notes _____

www.teamcracing.net