www.teamcracing.net

TM4 V2

Instruction manual

1:10 SCALE RADIO CONTROLLED ELECTRIC POWERED 4WD RACING BUGGY

Dimensions 尺寸：

Length 长度.....400mm
Width 宽度.....250mm
Height 高度.....145mm

Transmitter Preparation
調整遙控器

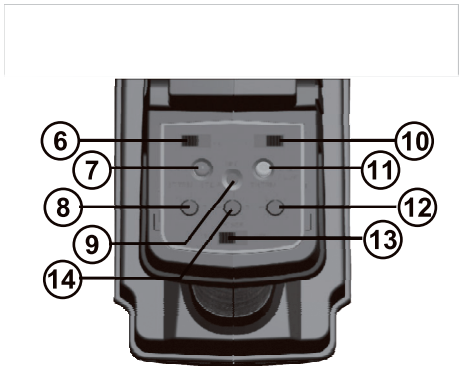

1 Control Panel 控制面板
2 Steering Wheel 轉向輪
3 Throttle Trigger 油門板扣
4 Battery Compartment 電池盒
5 Charging Jack 充電接口
6 Sterring Servo Reverse 轉向正逆轉開關
7 Power LED 電源指示燈
8 Steering Trim 轉向调節
9 Bind Button 設定按扭
10 Throttle Servo Reverse 油門正逆轉開關
11 Battery Voltage 電池電壓
12 Steering Dual Rate 轉向大小微調
13 Power Switch 電源開關
14 Throttle Trim 油門微調

Transmitter Battery Installation
遙控器電池安裝 ransmitter Preparation

Open battery cover at the bottom of transmitter
Install batteries. Follow the direction of batteries designated in the inside of battery box.
在遙控器的底部打開電池蓋子, 安裝電池。
跟隨電池的指示在電池盒裡面指定。

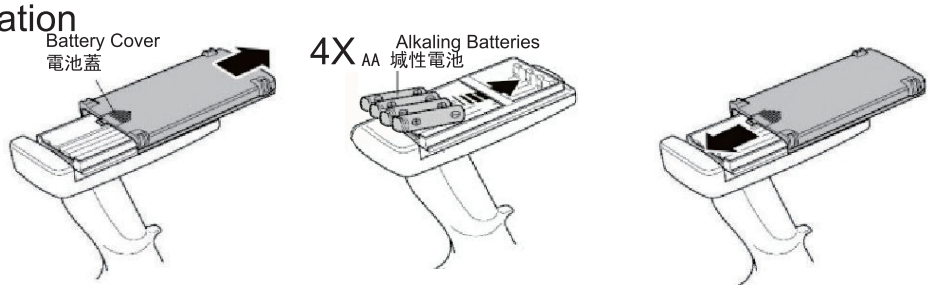

Transmitter Preparation
調整遙控器

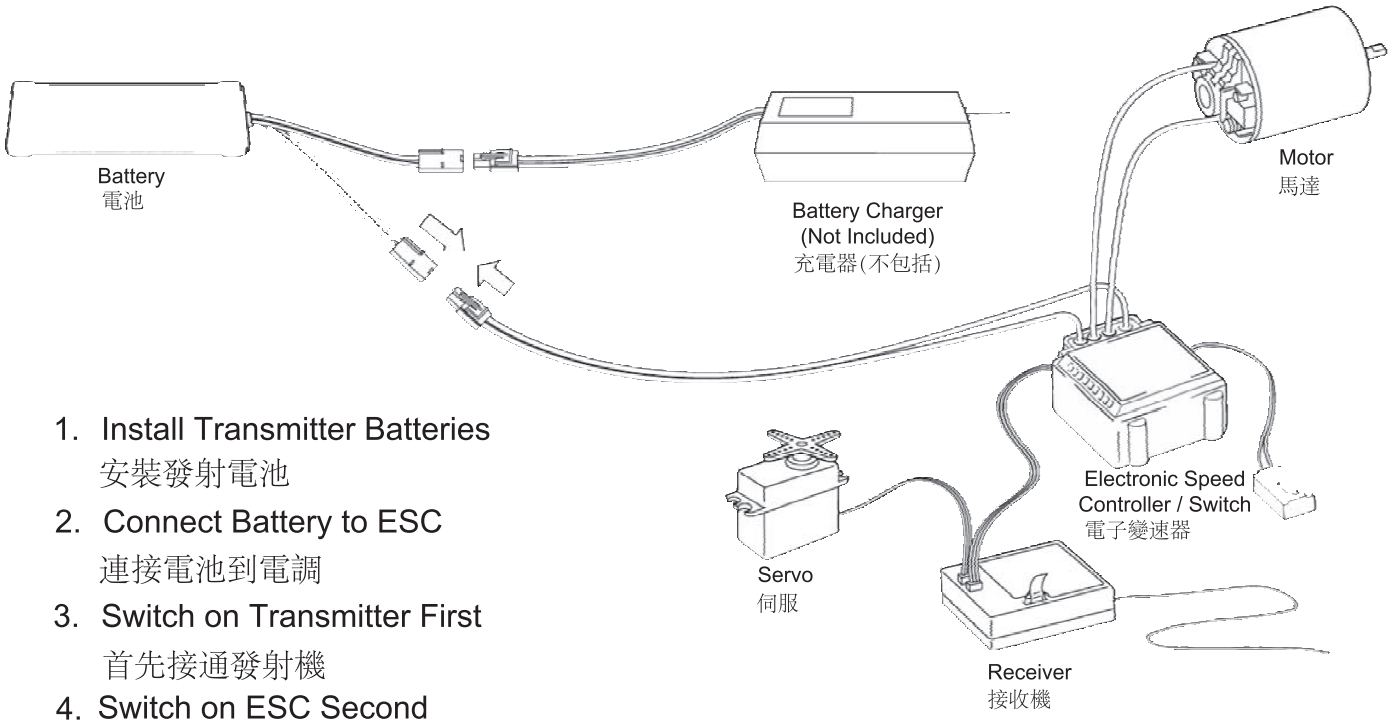

1. Install Transmitter Batteries
   安裝發射電池
2. Connect Battery to ESC
   連接電池到電調
3. Switch on Transmitter First
   首先接通發射機
4. Switch on ESC Second
   其次接通電調

Note: When done driving Turn Off the ESC and THEN Transmitter

注意:當停止駕駛首先要關掉電調
其次再關掉發射機

Tools required
組裝需要的工具

- Needie Nose Pllers
  尖嘴鉗

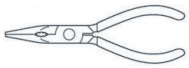

- Awl
  錐

- Grease
  潤滑油

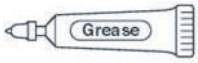

- Screw Cement
  螺絲膠水
- ***H162***
  Instant Glue
  瞬間膠水

- Differential Grease
  差速油

- Molybdenum Grease(Black)
  鉬油(黑)

- ***H154***
  Body Reamer
  車殼絞刀

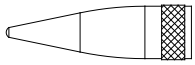

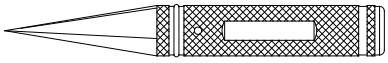

No need to pre-drill precise holes
(1mm to 15mm)can be drilled

可以對預鑽的孔準確地鑽1mm-15mm

- Wire Cutters
  鋼絲鉗

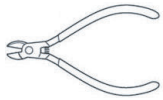

- ***H096***
  ROUND CUTTER
  剪刀

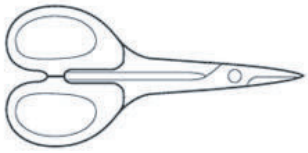

- Hex Wrench
  六角扳手

- Hex Wrench
  十字套筒

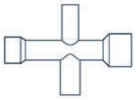

- Sharp Hobby knife
  美工刀

For trimming bodies!
用于修剪車殼!

1 Motor Mount/Side Panel 马达座/侧板

Bag-A

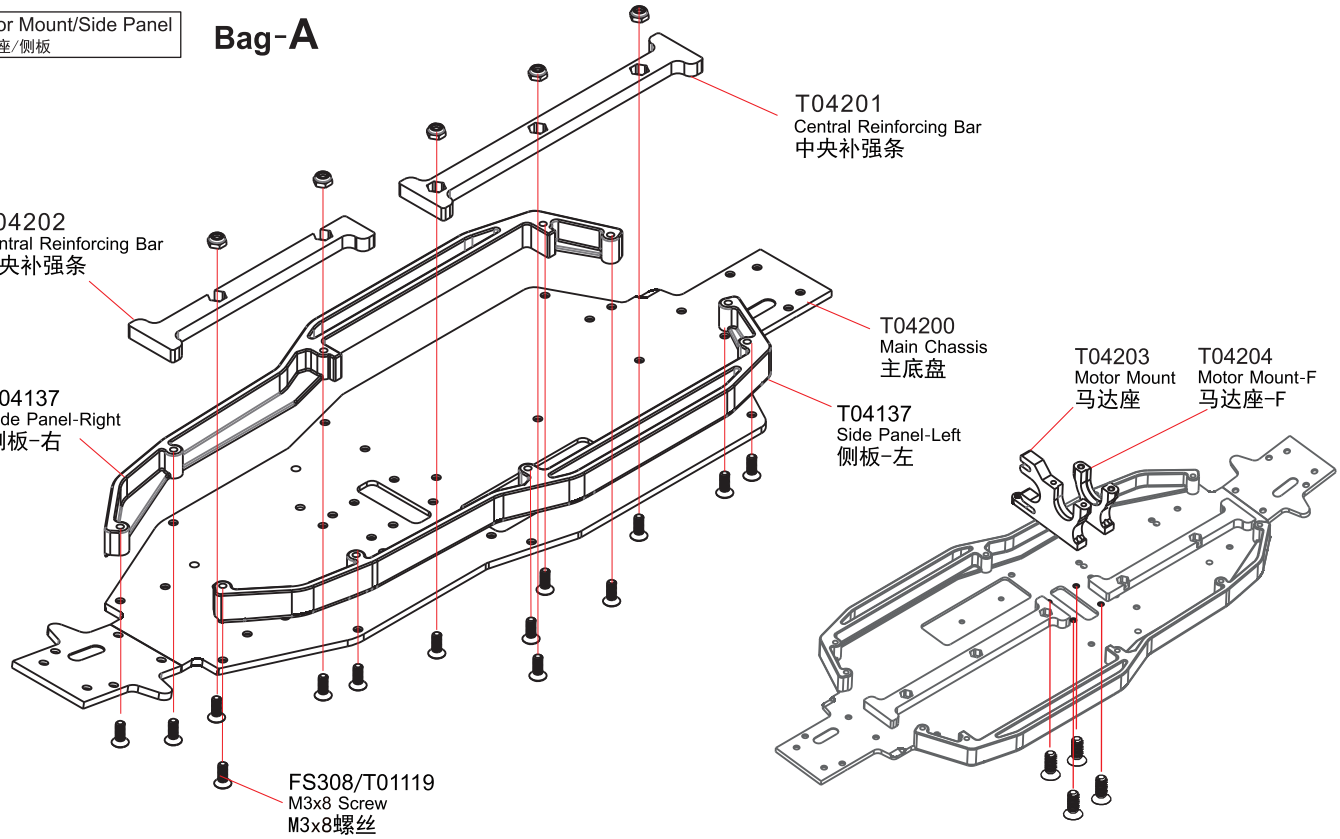

FS308/T01119 M3x8 Screw
M3x8螺丝
.....18

2 Diff 差速器

Bag-B x2

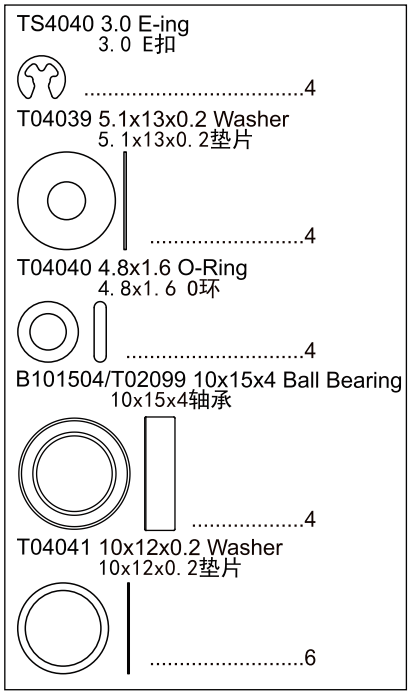

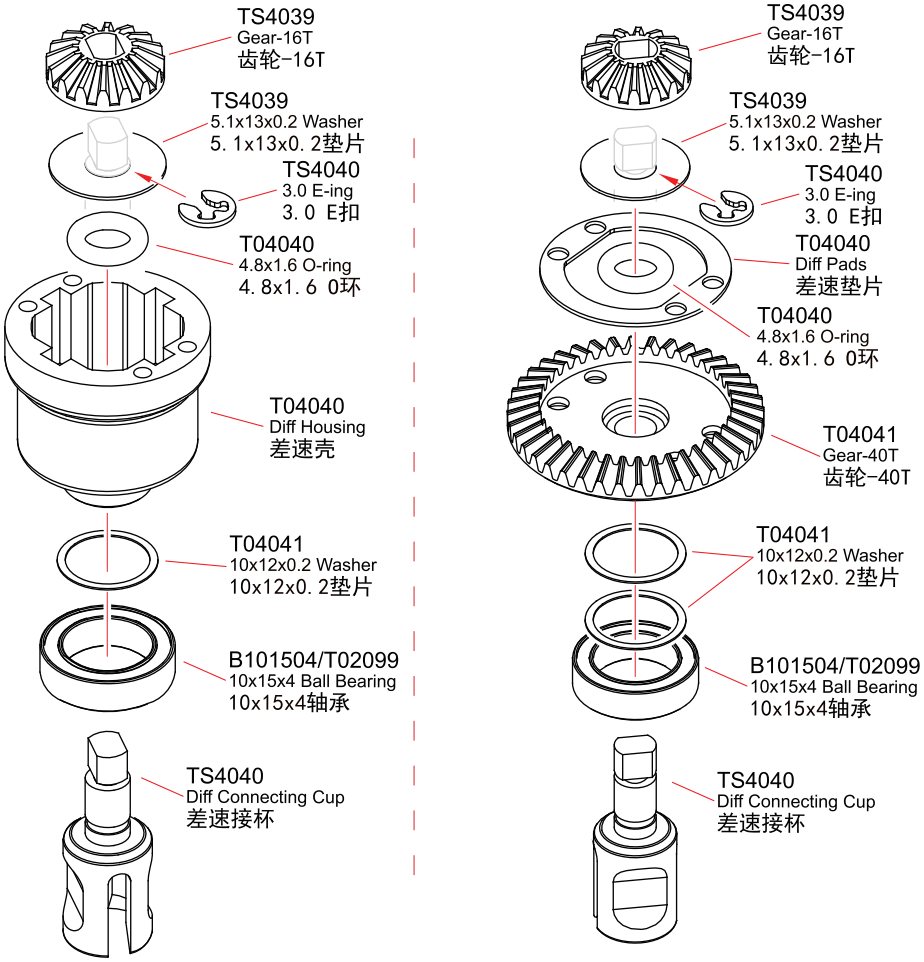

x2 Assemble as many times as specified
需組裝數量

3 Diff 差速器 Bag-B x2

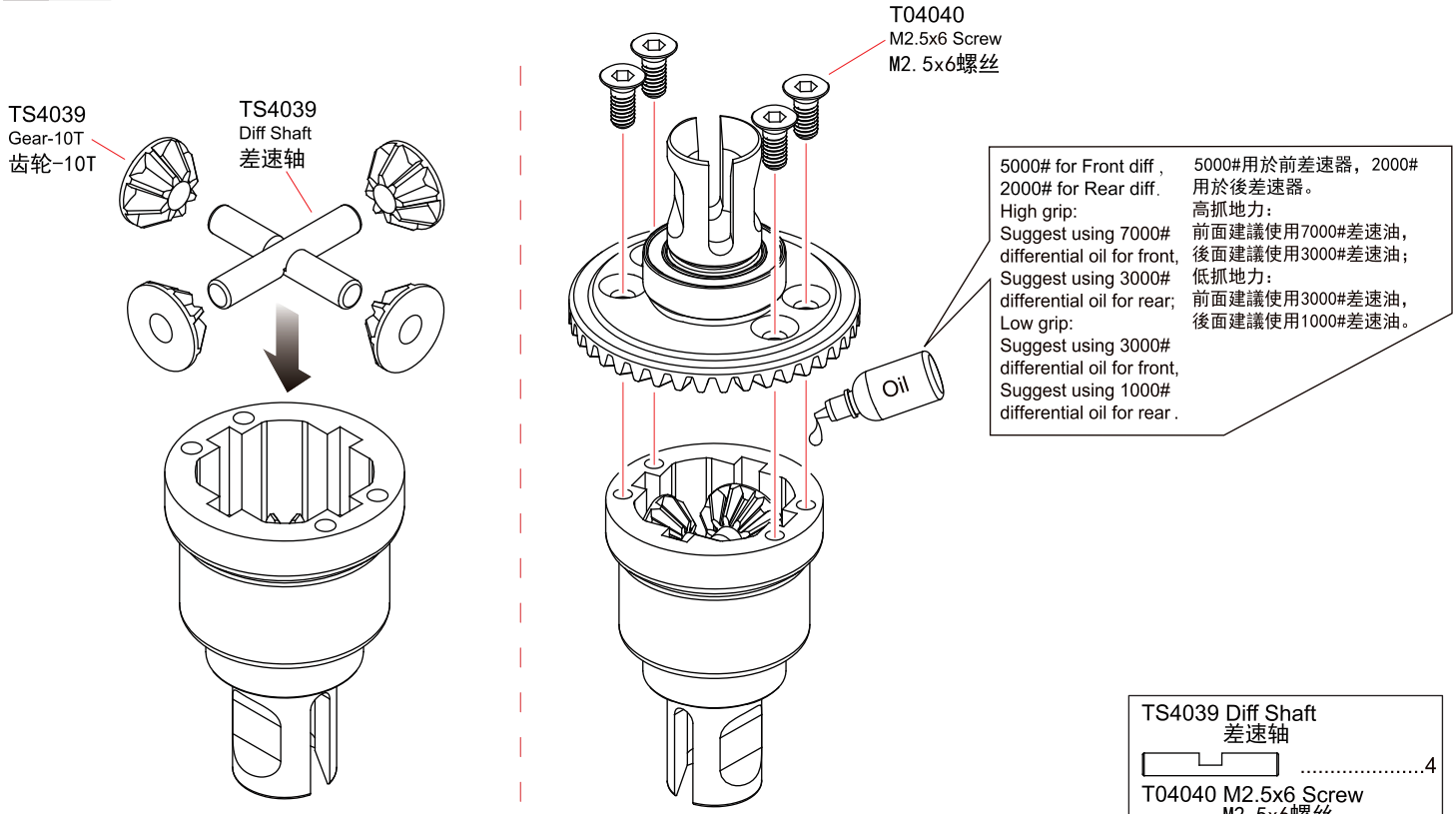

4 Front Gear-box 前齿轮箱 Bag-B

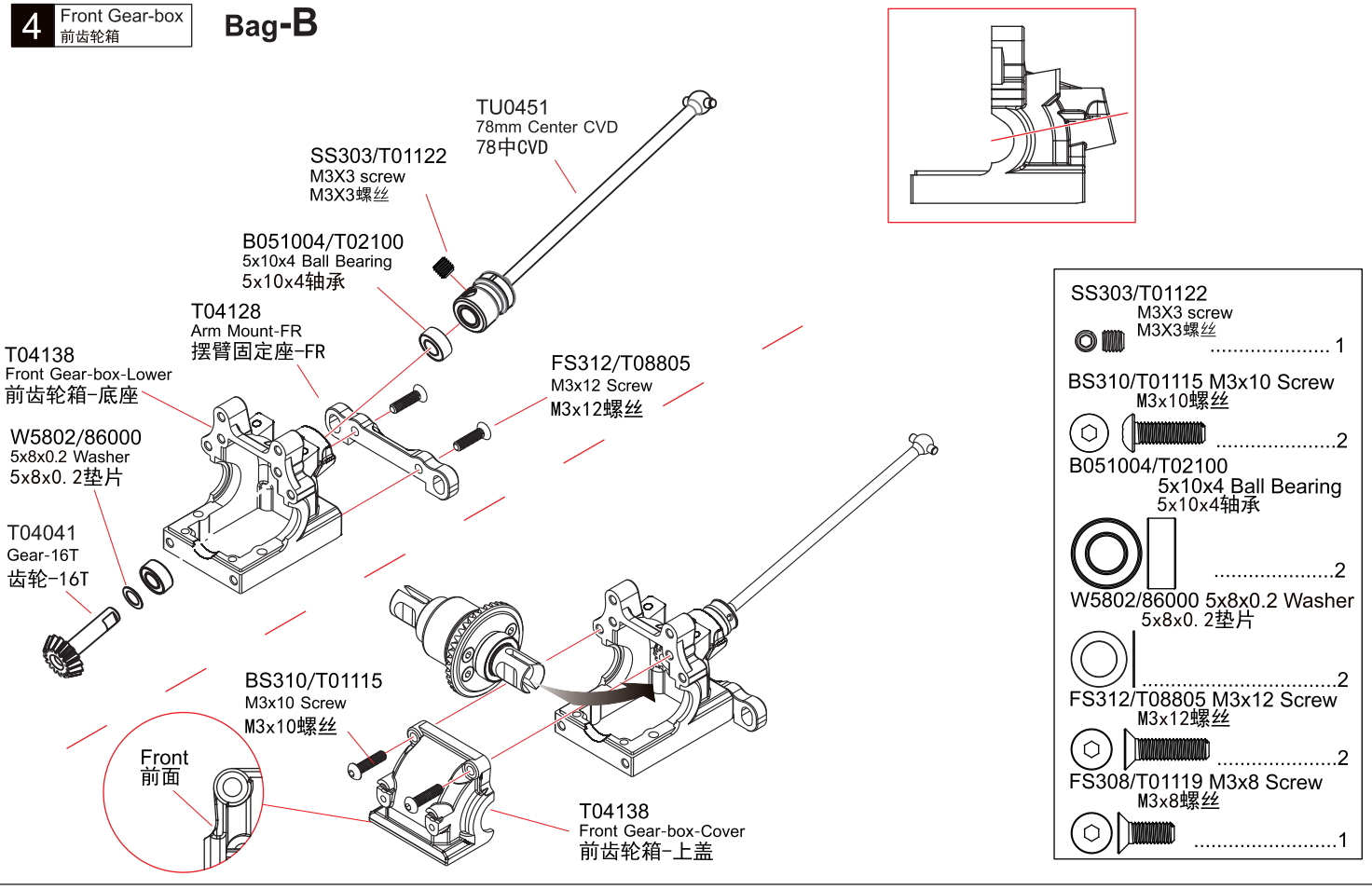

x2 Assemble as many times as specified
需組裝數量

5 Front Gear-box 前齿轮箱

Bag-B

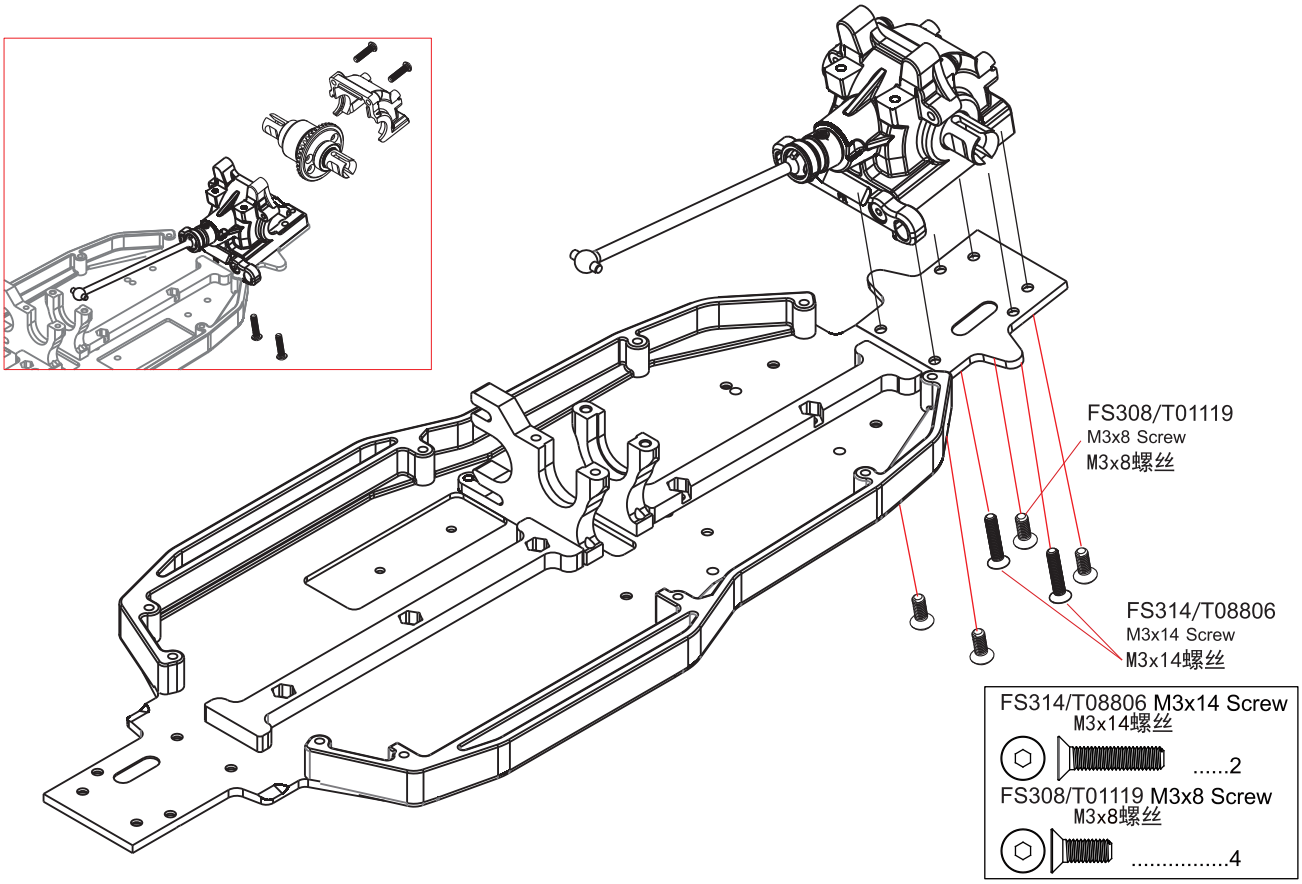

6 Rear Gear-box 后齿轮箱

Bag-B

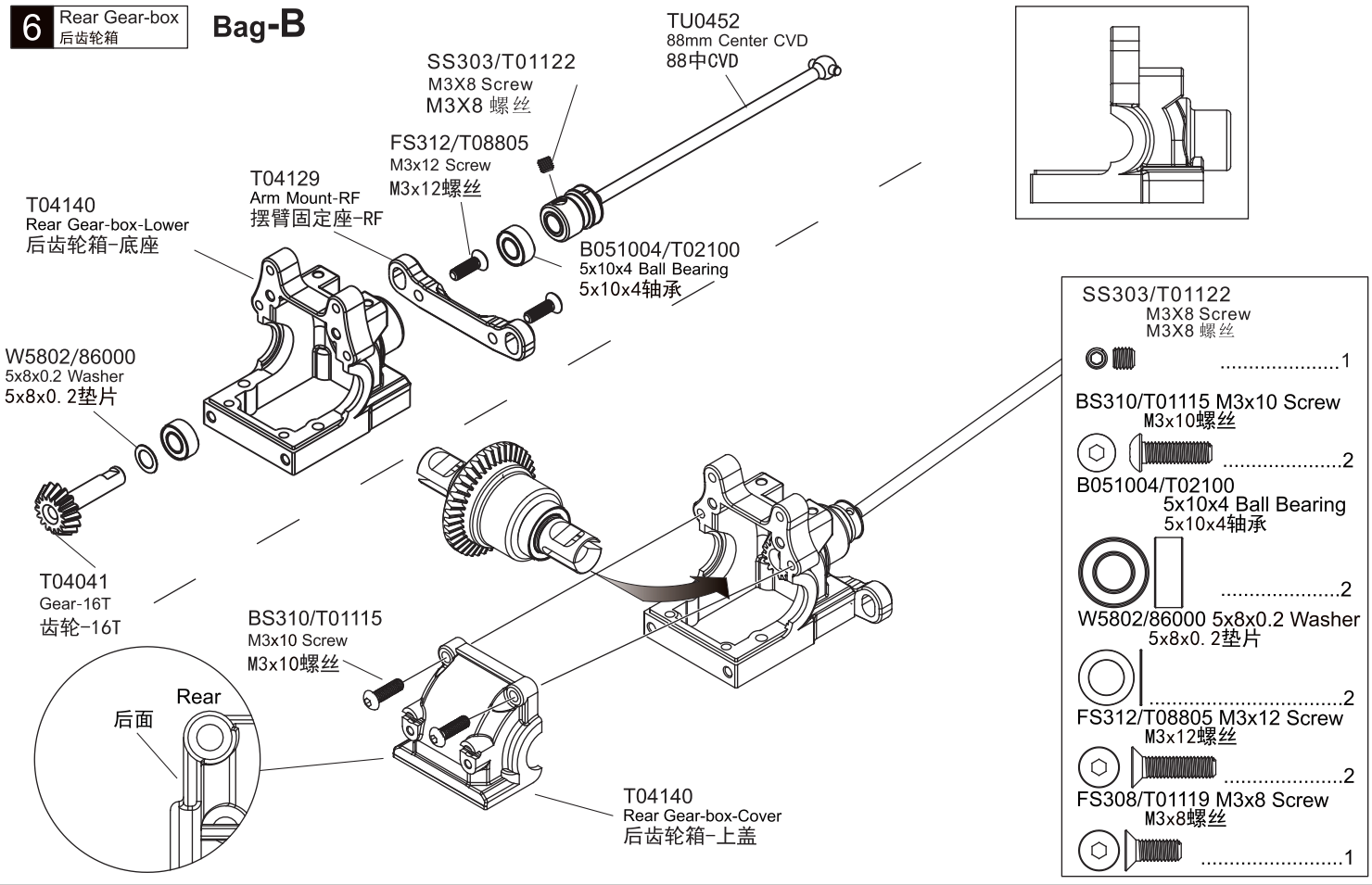

7 Rear Gear-box 后齿轮箱

Bag-B

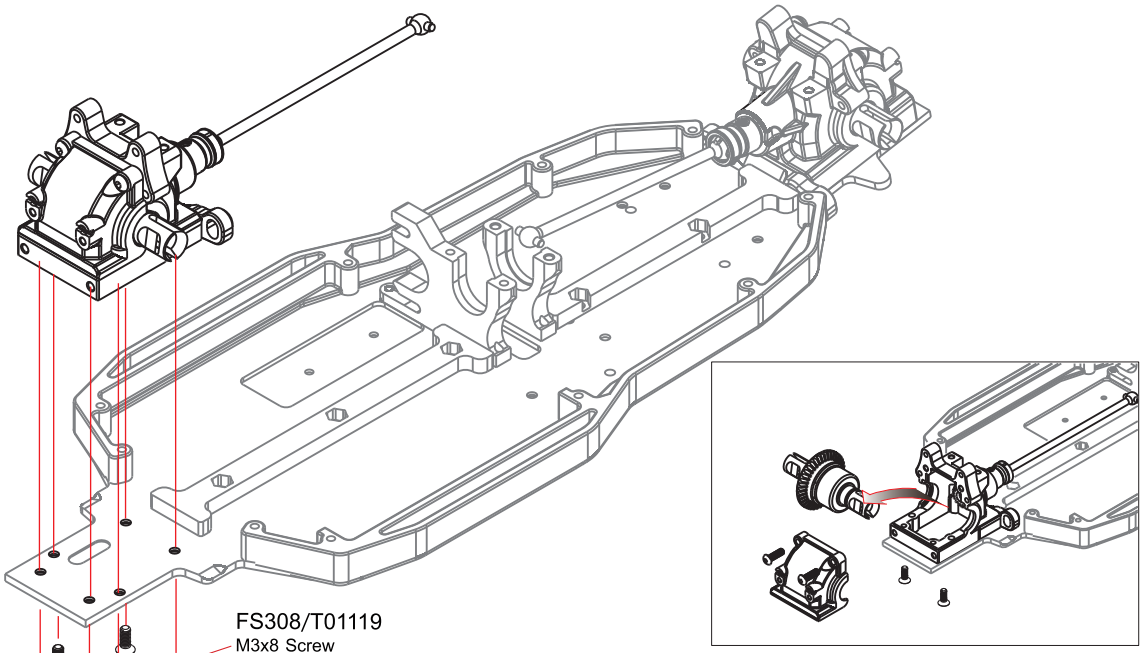

FS314/T08806 M3x14 Screw
M3x14螺丝 2

FS308/T01119 M3x8 Screw
M3x8螺丝 4

8 Slipper Set 扭限组

Bag-C

P210/T04032 2x9.8 Pin
2x9. 8钢针 2

BS305/T08788 M3x5 Screw
M3x5螺丝 1

P208 2x7.8 Pin
2x7. 8钢针 1

W101202/TR4057 10x12x0.2 Washer
10x12x0. 2垫片 1

B101504/T02099 10x15x4 Ball Bearing
10x15x4轴承 2

T04125 M3x3 Screw
M3x3螺丝 1

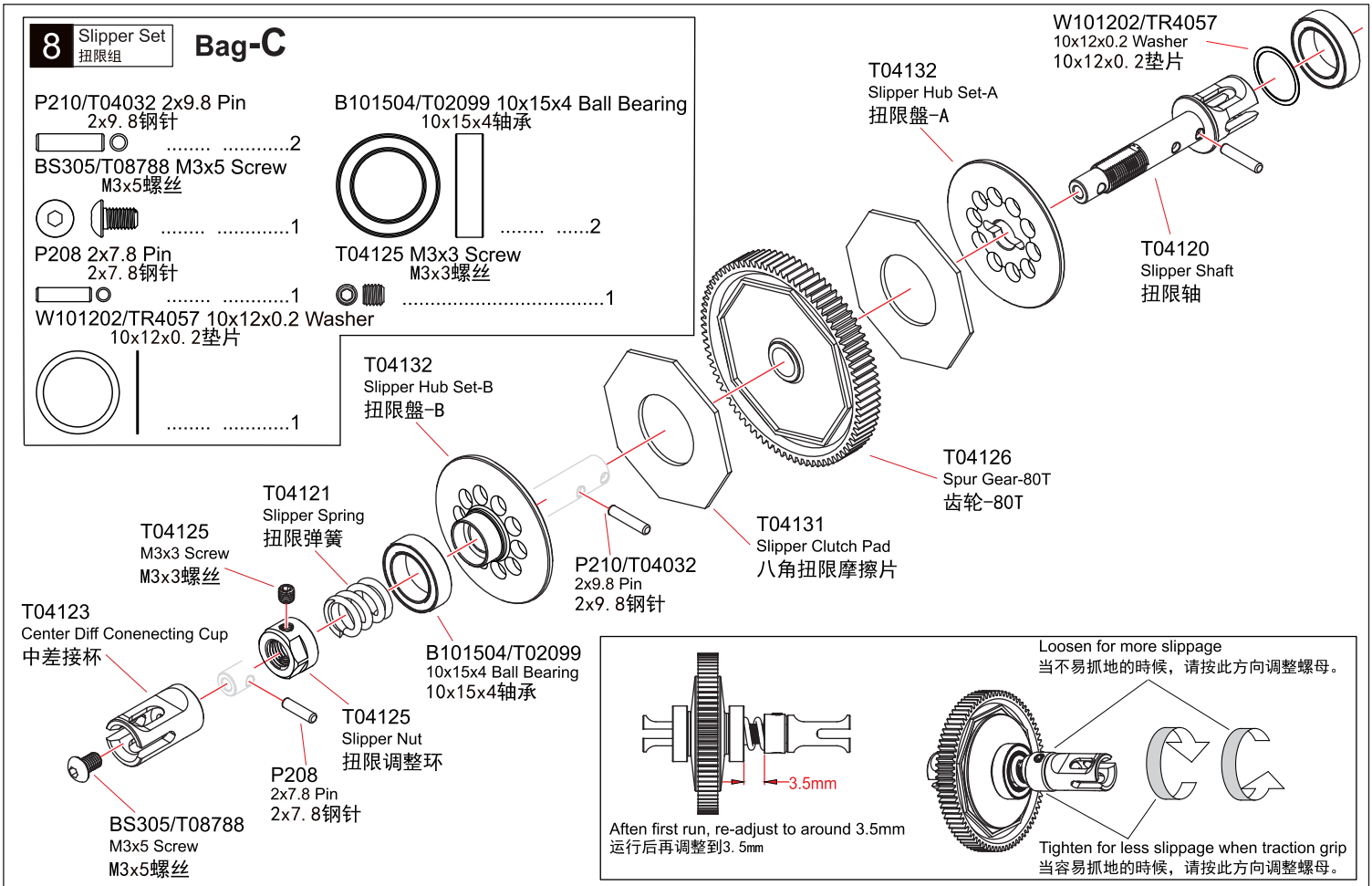

9 Center Gear 中齿轮

Bag-C

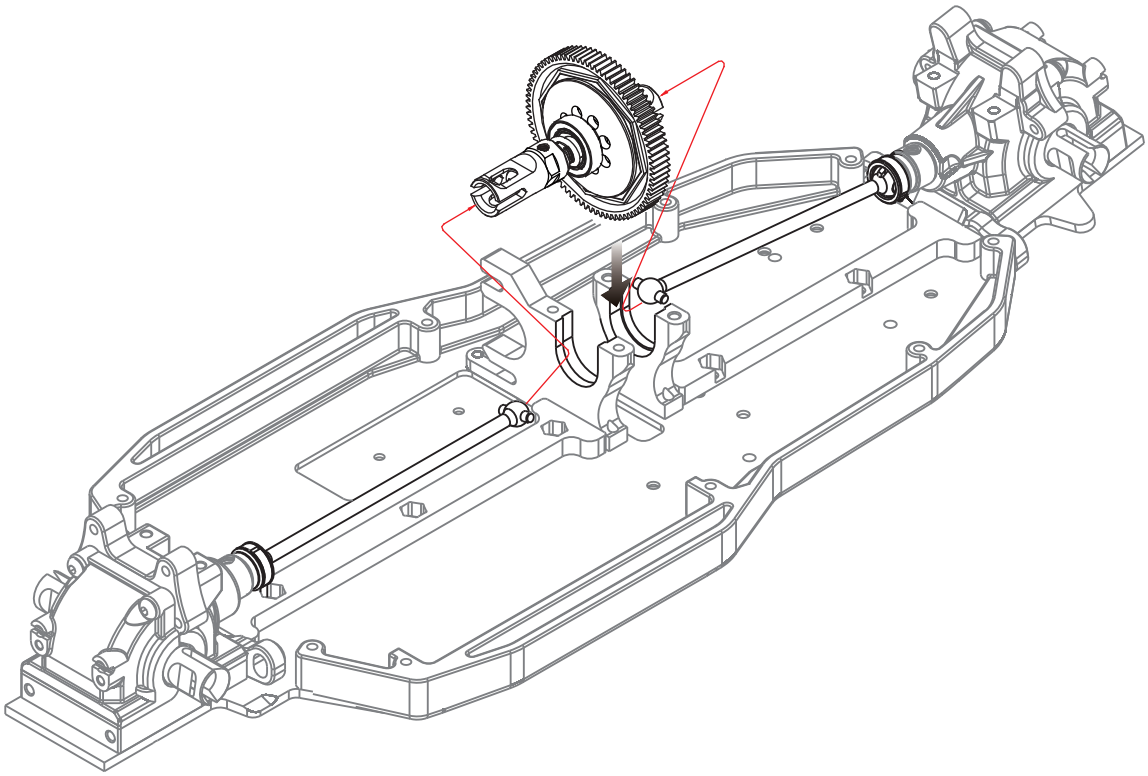

10 Steering Servo 转向伺服系统

Bag-C

Select the servo horn matching the servo being used.
根据舵机选择伺服臂。

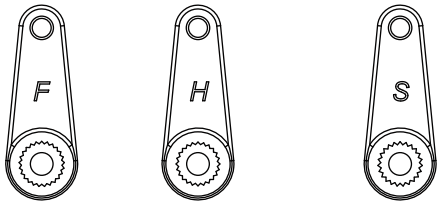

Futaba - 25t　Hitec - 24t　Sanwa / JR / KO - 23t

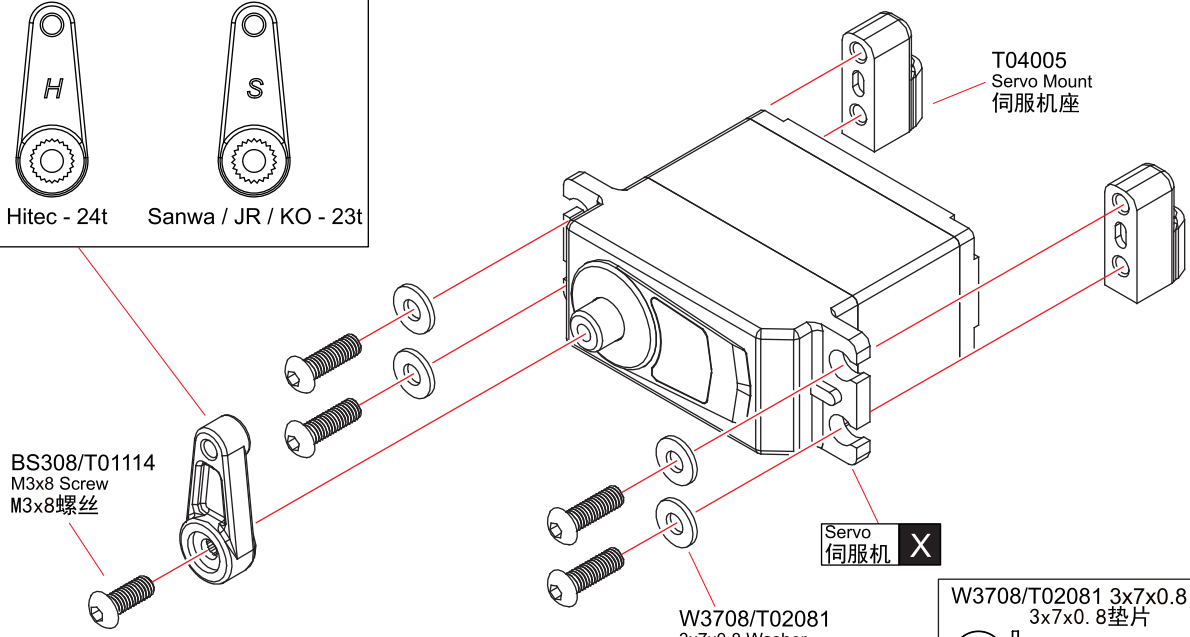

W3708/T02081 3x7x0.8 Washer
3x7x0. 8垫片 4

BS308/T01114 M3x8 Screw
M3x8螺丝 5

X Must be purchased separately
需另購物品

11 Steering Servo 转向伺服系统 Bag-C

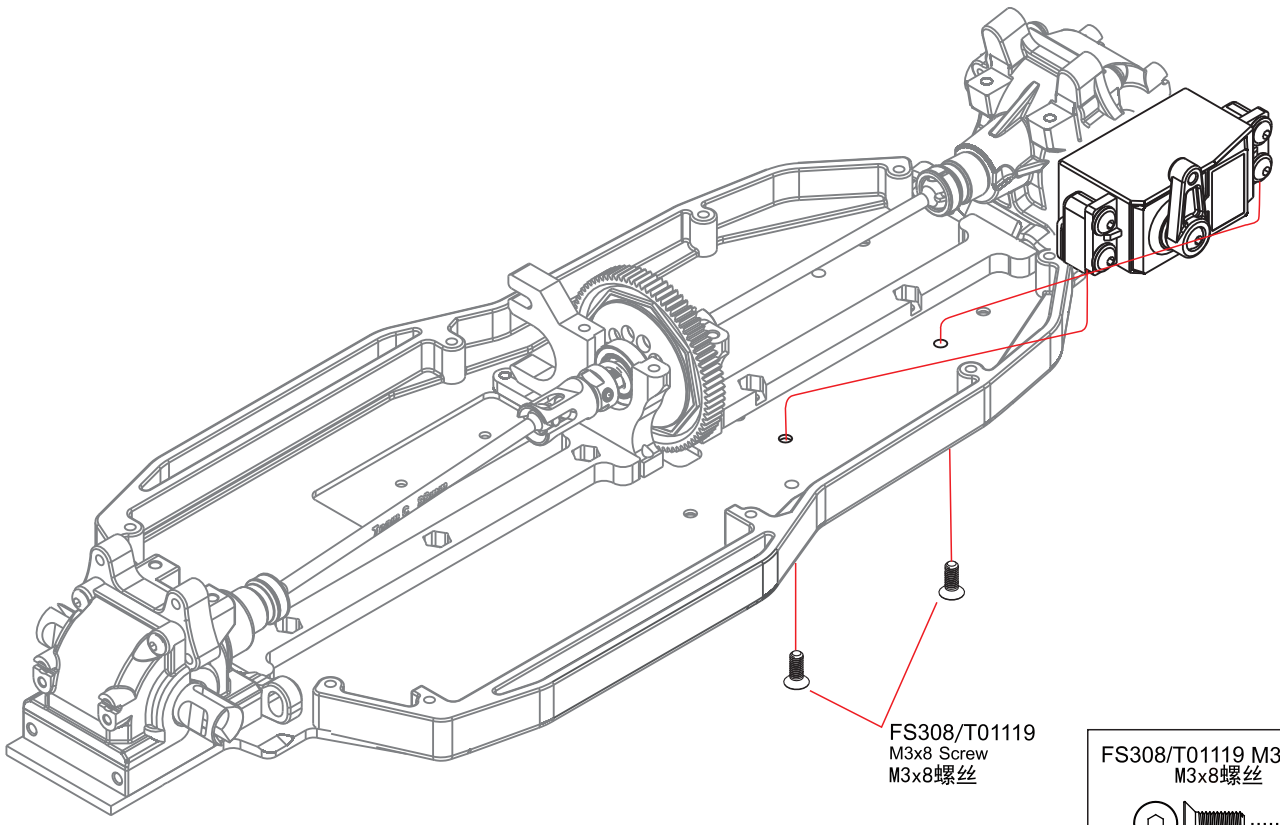

FS308/T01119 M3x8 Screw
M3x8螺丝
.....2

12 Buffer 缓冲 Bag-C

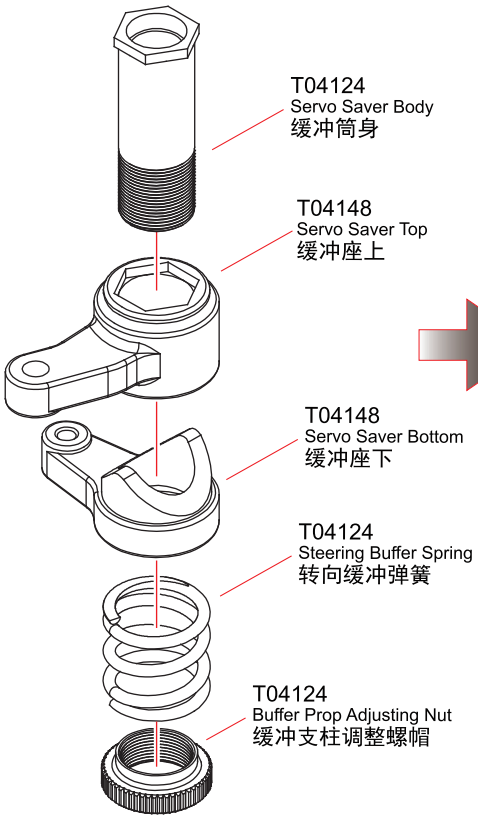

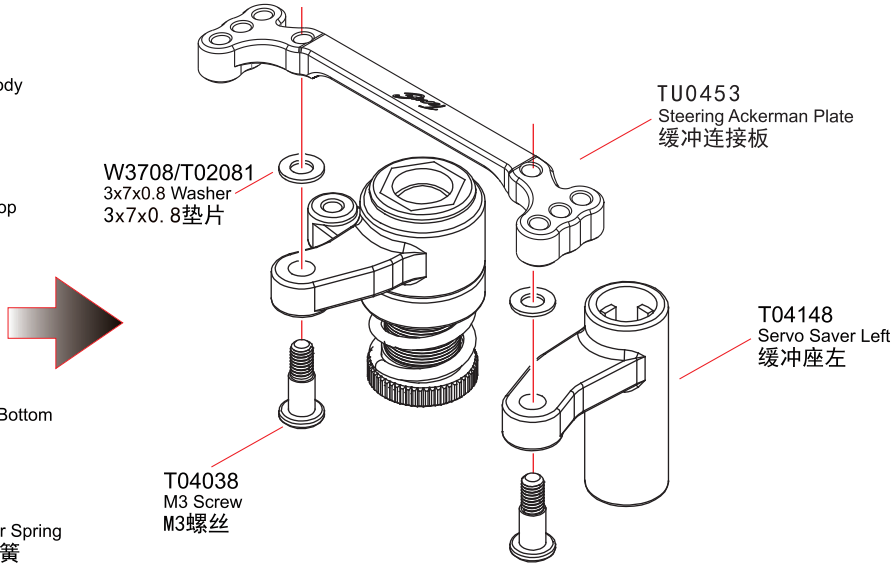

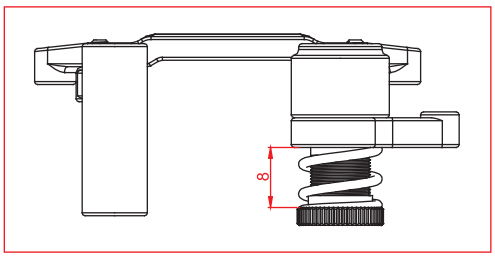

W3708/T02081 3x7x0.8 Washer
3x7x0. 8垫片
.....2
T04038 M3 Screw
M3螺丝
..... .2

13 Buffer 缓冲 Bag-C

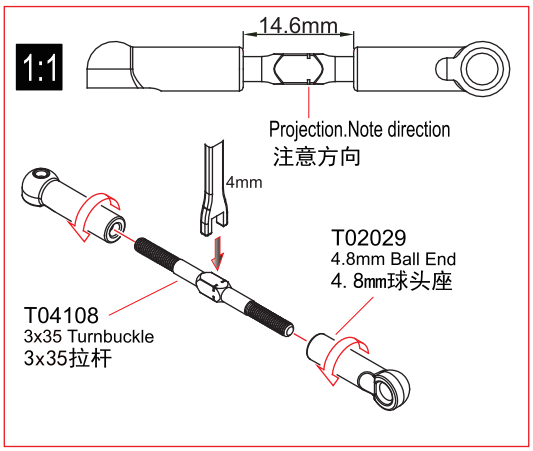

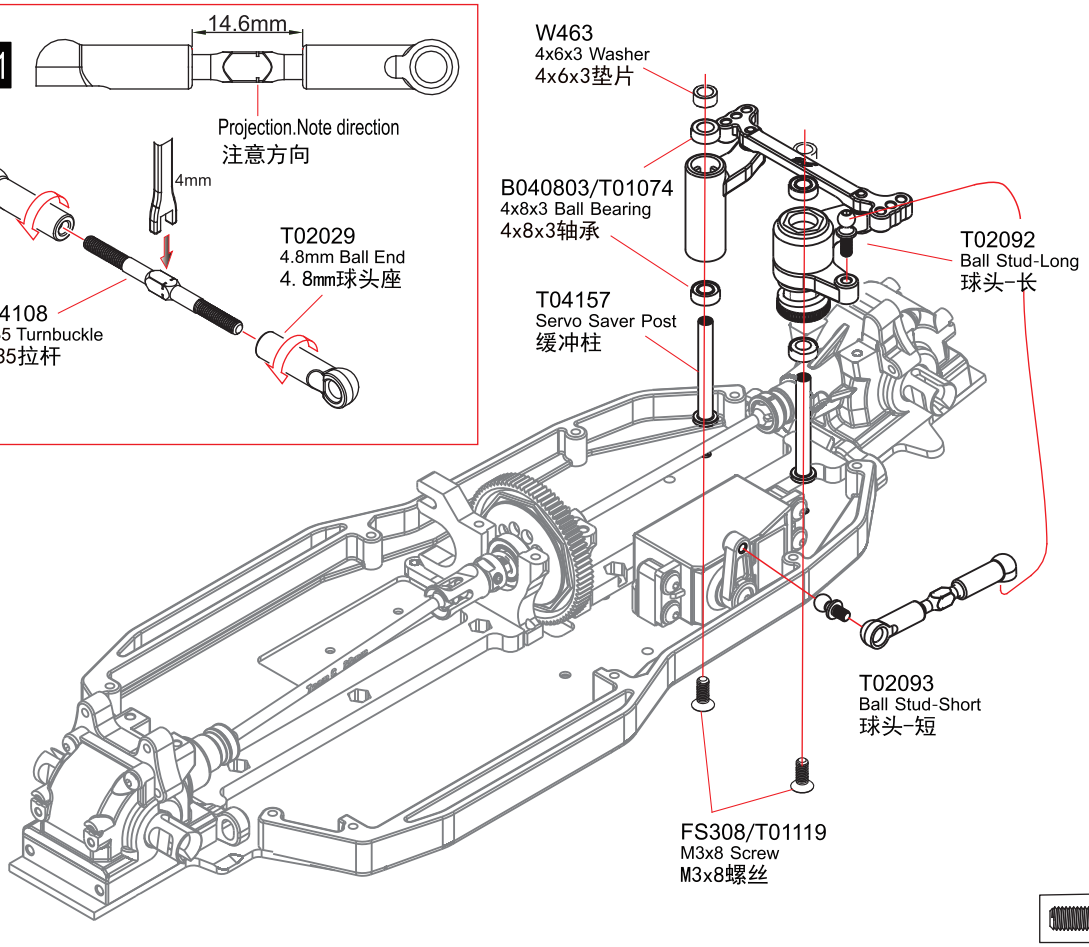

B040803/T01074 4x8x3 Ball Bearing 4x8x3轴承 4

W463 4x6x3 Washer 4x6x3垫片 2

T02093 Ball Stud-Short 球头-短 1

T02092 Ball Stud-Long 球头-长 1

FS308/T01119 M3x8 Screw M3x8螺丝 2

T02029 4.8mm Ball End 4. 8mm球头座 2

T04108 3x35 Turnbuckle 3x35拉杆 1

14 Top Deck/Car Shell Column 二楼板/车壳柱

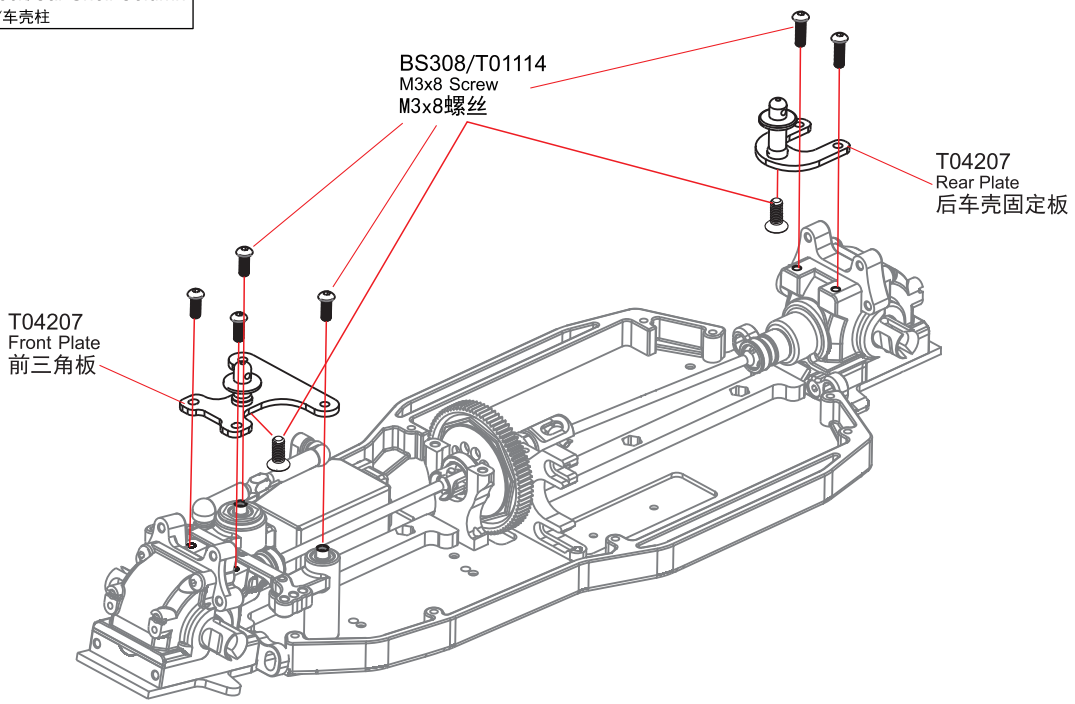

BS308/T01114 M3x8 Screw M3x8螺丝 8

1:1 Ture-to-scale diagram 圖形比例

15 Front Shock Tower 前避震架

Bag-C

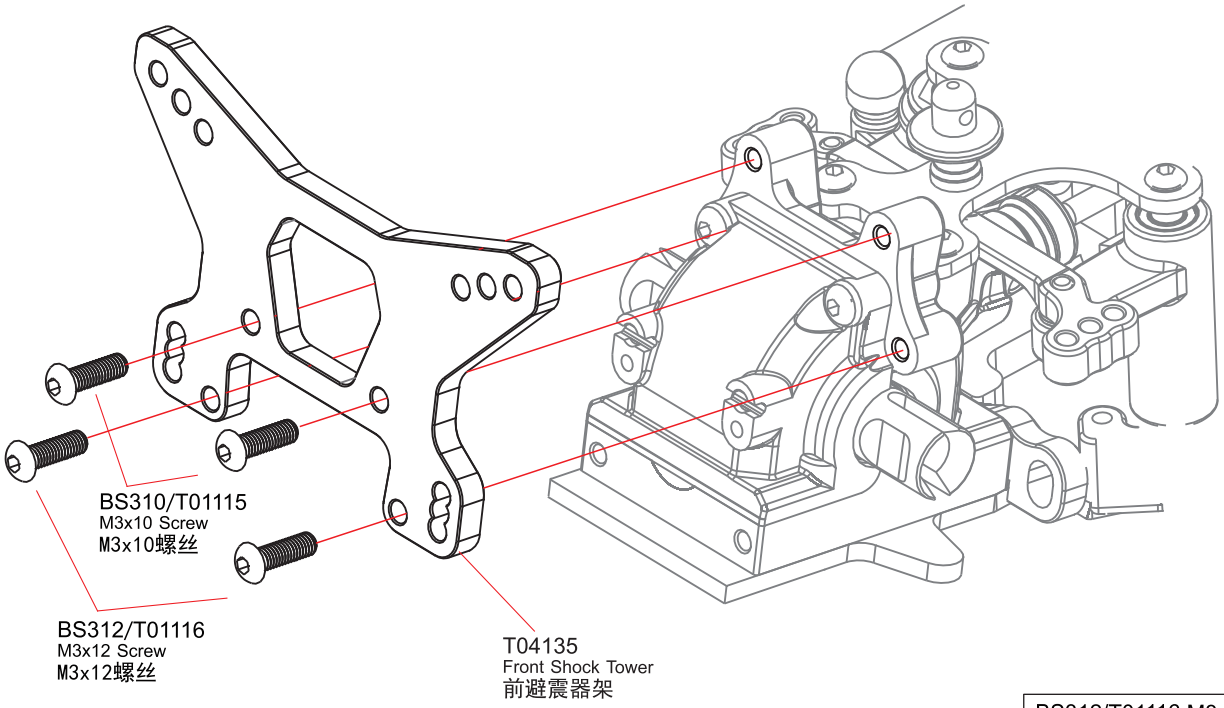

BS312/T01116 M3x12 Screw
M3x12螺丝
.....2

BS310/T01115 M3x10 Screw
M3x10螺丝
.....2

16 Rear Shock Tower 后避震架

Bag-C

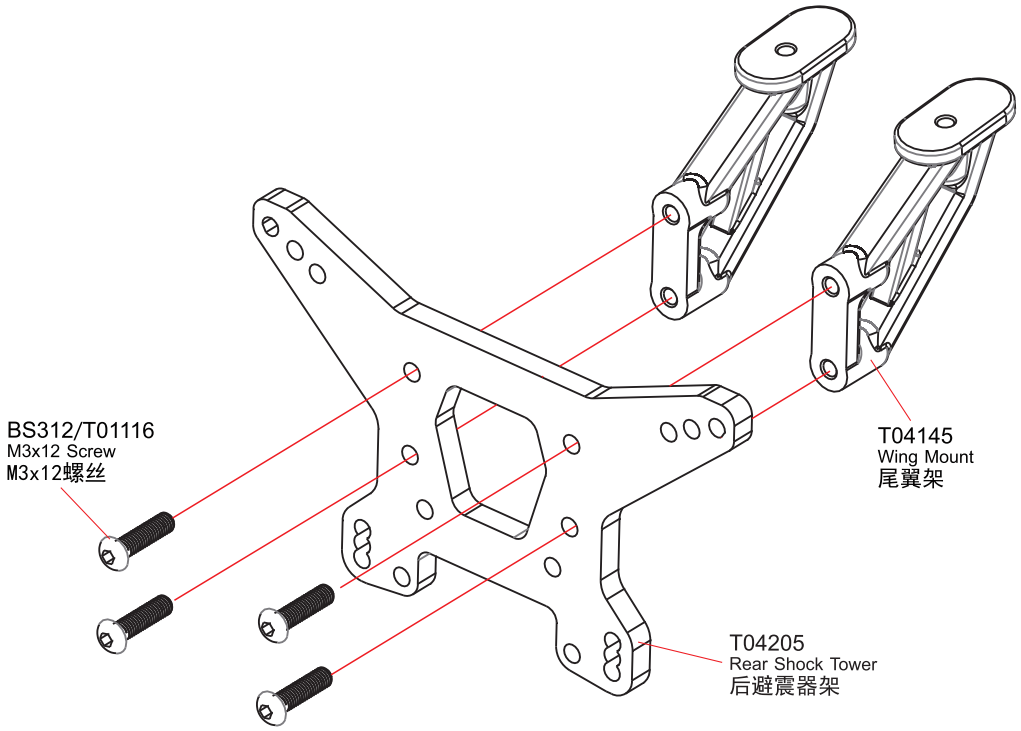

BS312/T01116 M3x12 Screw
M3x12螺丝
.....4

17 Rear Shock Tower 后避震架

Bag-C

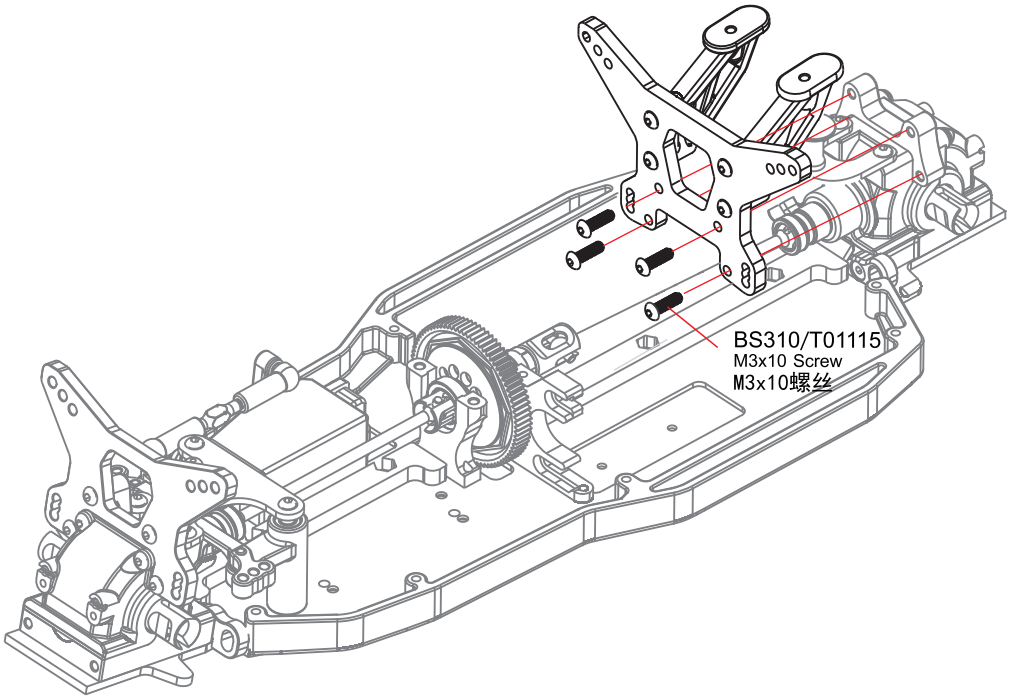

BS310/T01115 M3x10 Screw
M3x10螺丝
.....4

18 Difference On The Roof 中差上顶板

Bag-C

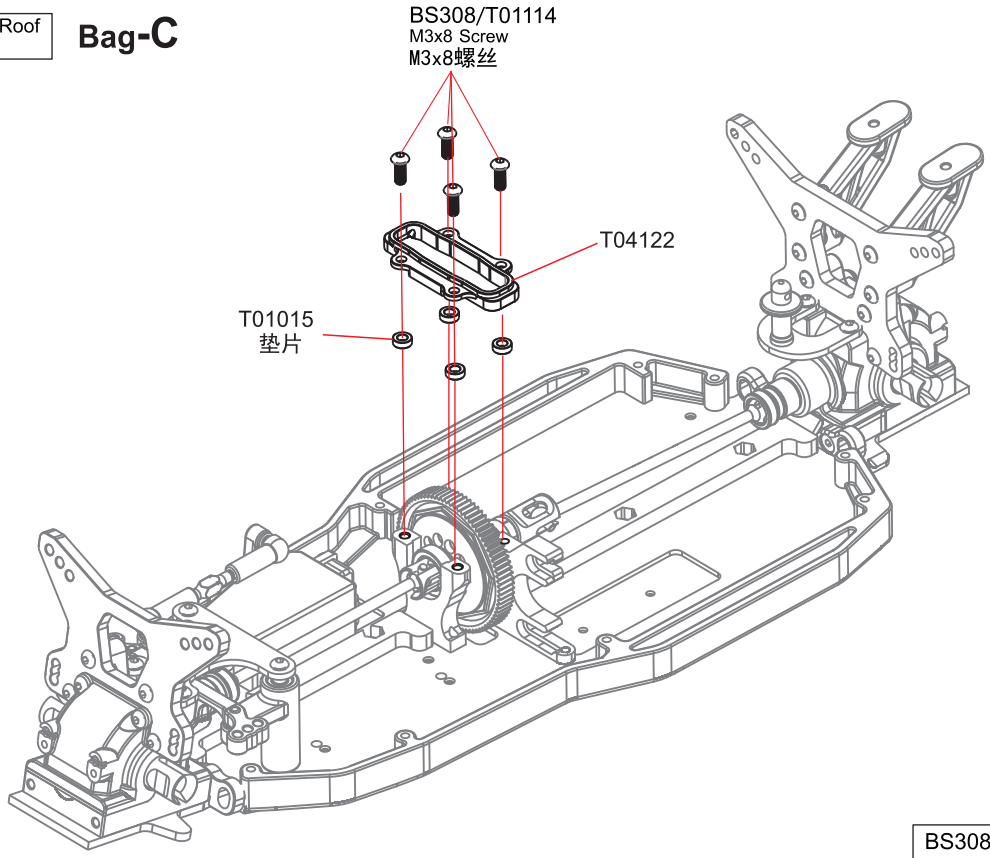

BS308/T01114 M3x8 Screw
M3x8螺丝
.....4

19 Front Hub Carriers 前轮座 Bag-D

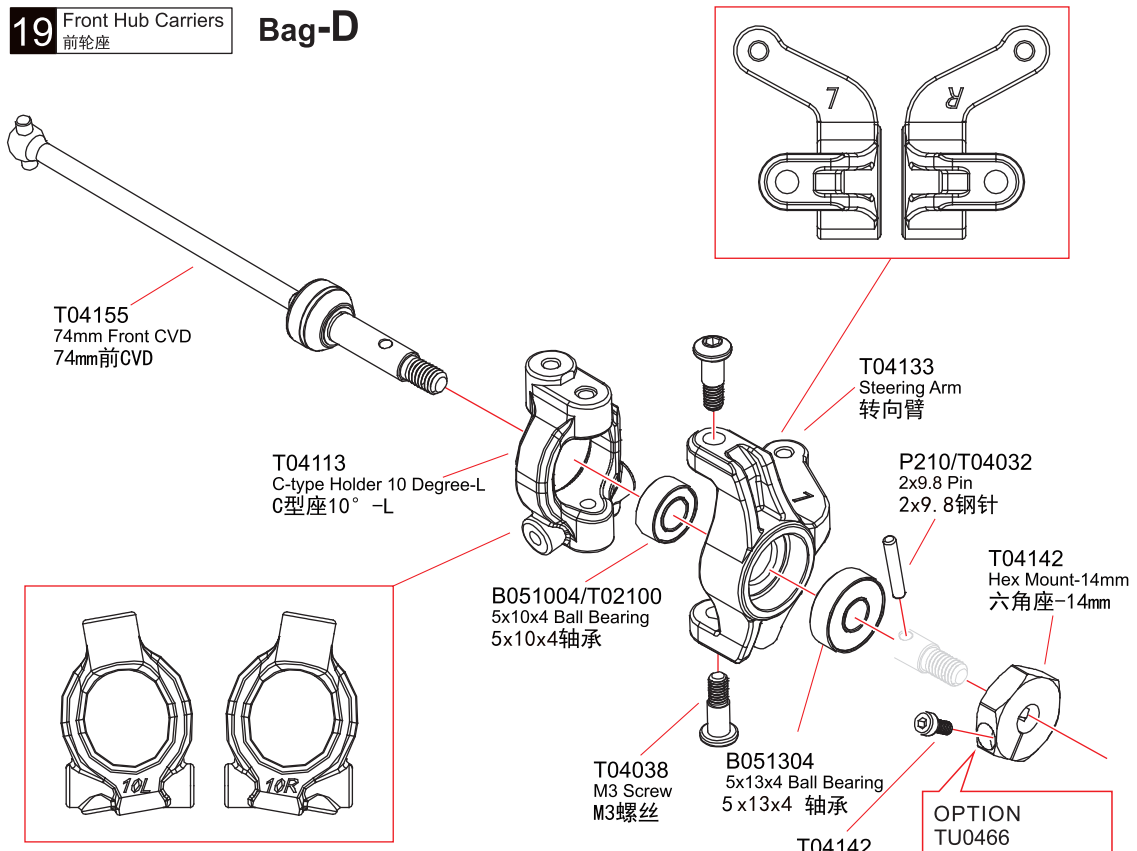

T04038 M3 Screw
M3螺丝 4

B051304 5x13x4 Ball Bearing
5x13x4轴承 2

B051004/T02100
5x10x4 Ball Bearing
5x10x4轴承 2

T04142 M2x5 Screw
M2x5螺丝 2

P210/T04032 2x9.8 Pin
2x9. 8钢针 2

20 Front Lower Arm 前下摆臂 Bag-D

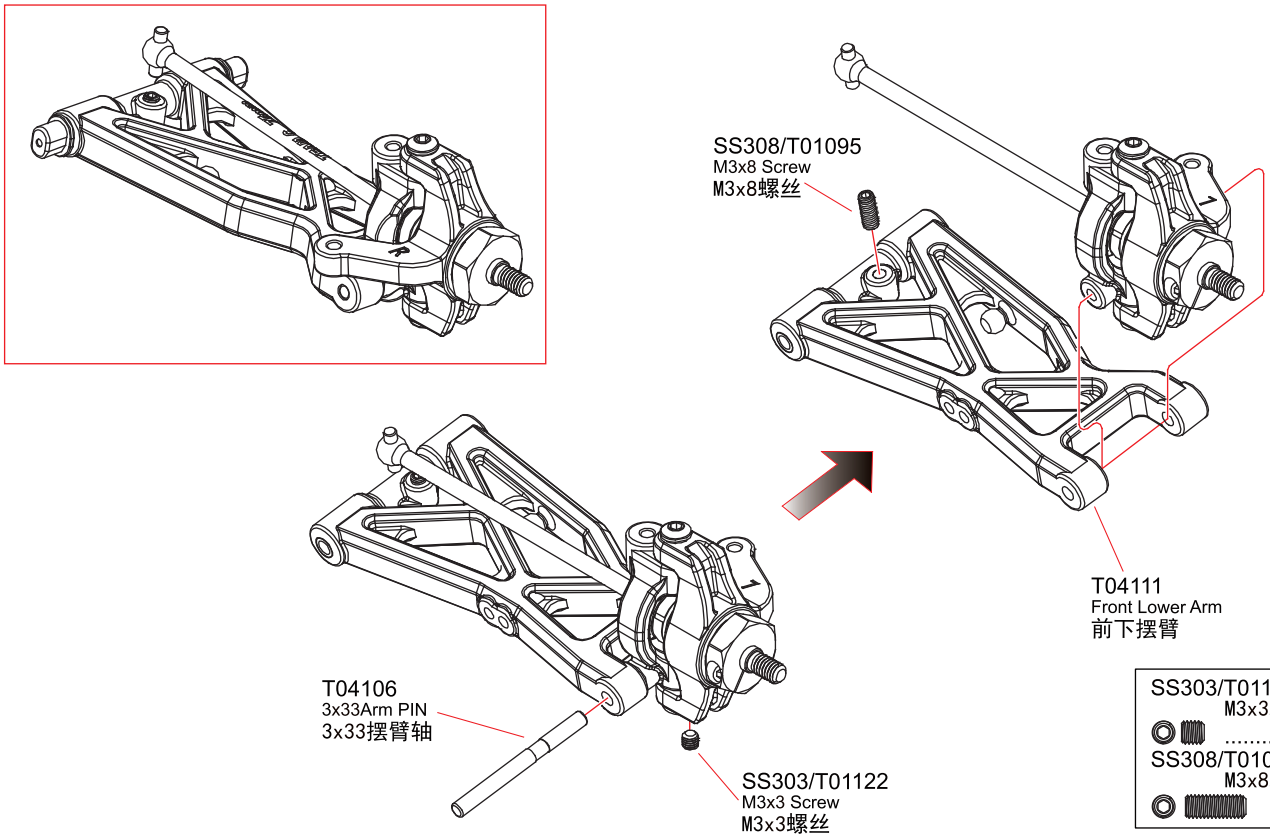

SS303/T01122 M3x3 Screw
M3x3螺丝 2

SS308/T01095 M3x8 Screw
M3x8螺丝 2

L/R Assemble both Left and Right
組裝左和右

21 Front Suspension Arm 前摆臂

Bag-D

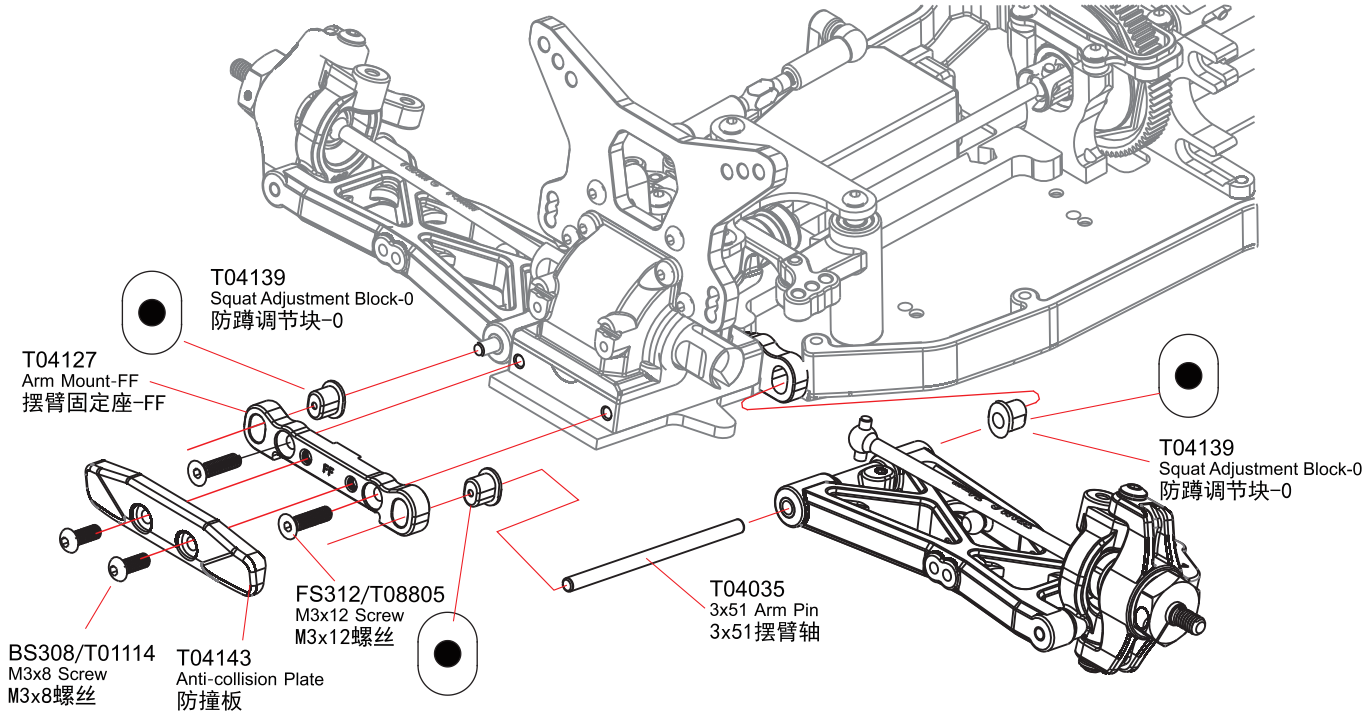

kick-up

FF	FR	(°)
FF	FR	=10°
FF	FR	=9°
FF	FR	=11°
FF	FR	=11°
FF	FR	=10°
FF	FR	=12°
FF	FR	=9°
FF	FR	=8°
FF	FR	=10°

ROLL-CENTER

FF	FF	(mm)
FF	FR	=+0.9mm
FF	FR	=0mm
FF	FR	=-0.9mm

T04035 3x51 Arm PIN
3x51摆臂轴 2

FS312/T08805 M3x12 Screw
M3x12螺丝 2

BS308/T01114 M3x8 Screw
M3x8螺丝 2

L/R Assemble both Left and Right
組裝左和右

22 Turnbuckle 拉杆 Bag-D

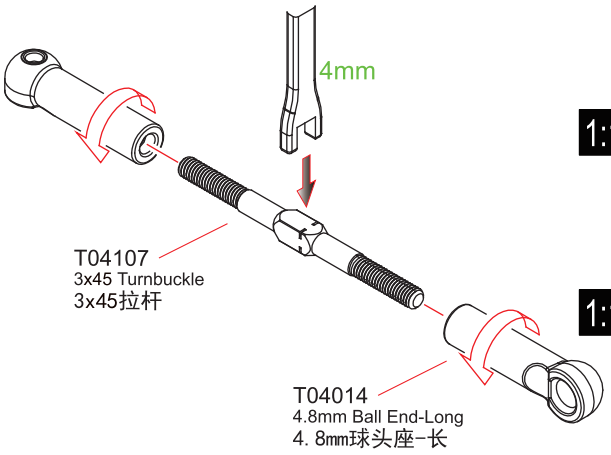

1:1 x1 Front Upper Rod-L 前上拉杆-L

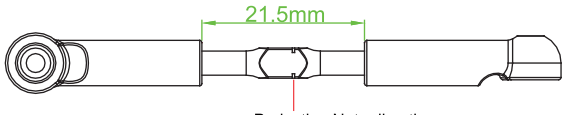

Projection.Note direction
注意方向

1:1 x1 Front Upper Rod-R 前上拉杆-R

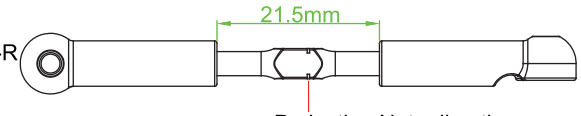

Projection.Note direction
注意方向

1:1 x2 Rear Upper Rod 后上拉杆

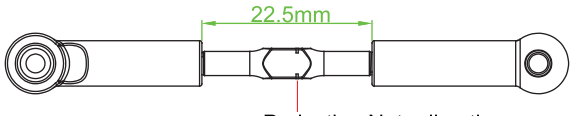

Projection.Note direction
注意方向

1:1 x2 Draglink 转向拉杆

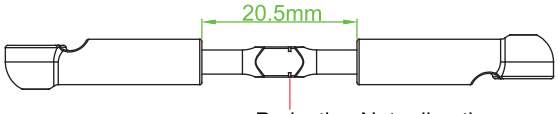

Projection.Note direction
注意方向

T04107 3x45 Turnbuckle 3x45拉杆 6	T04014 4.8mm Ball End-Long 4. 8mm球头座-长 12

23 Front Turnbuckle 前拉杆 Bag-D

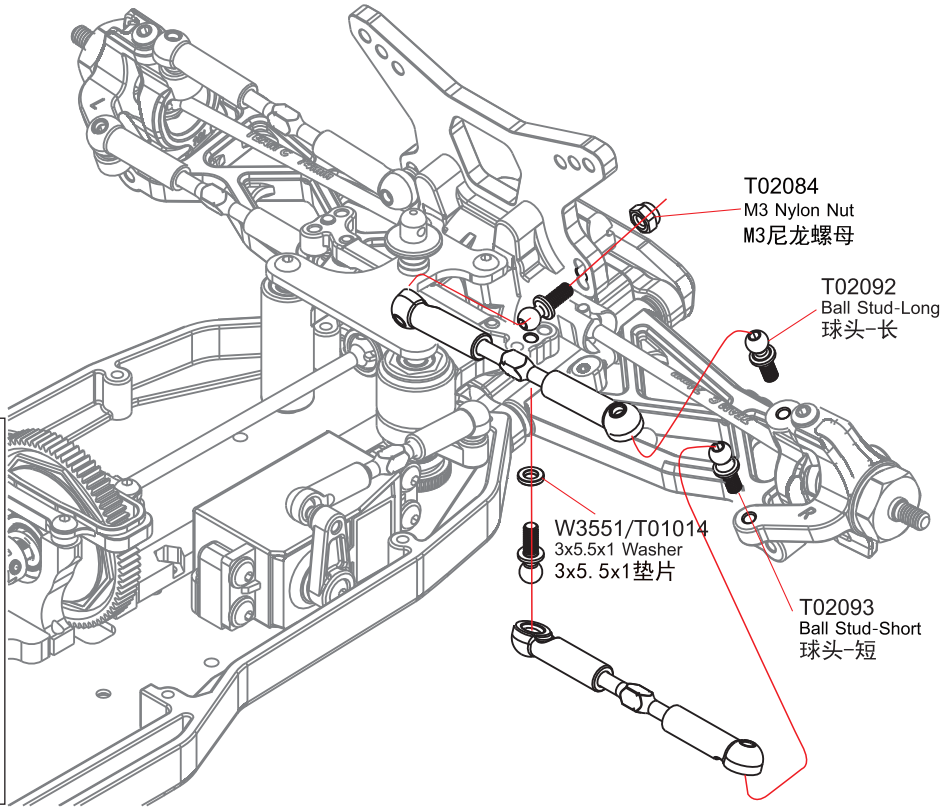

W3551/T01014 3x5.5x1 Washer 3x5. 5x1垫片 2

T02084 M3 Nylon Nut M3尼龙螺母 2

T02092 Ball Stud-Long 球头-长 6

T02093 Ball Stud-Short 球头-短 2

24 Rear Hub Carriers 后轮座 Bag-D x2

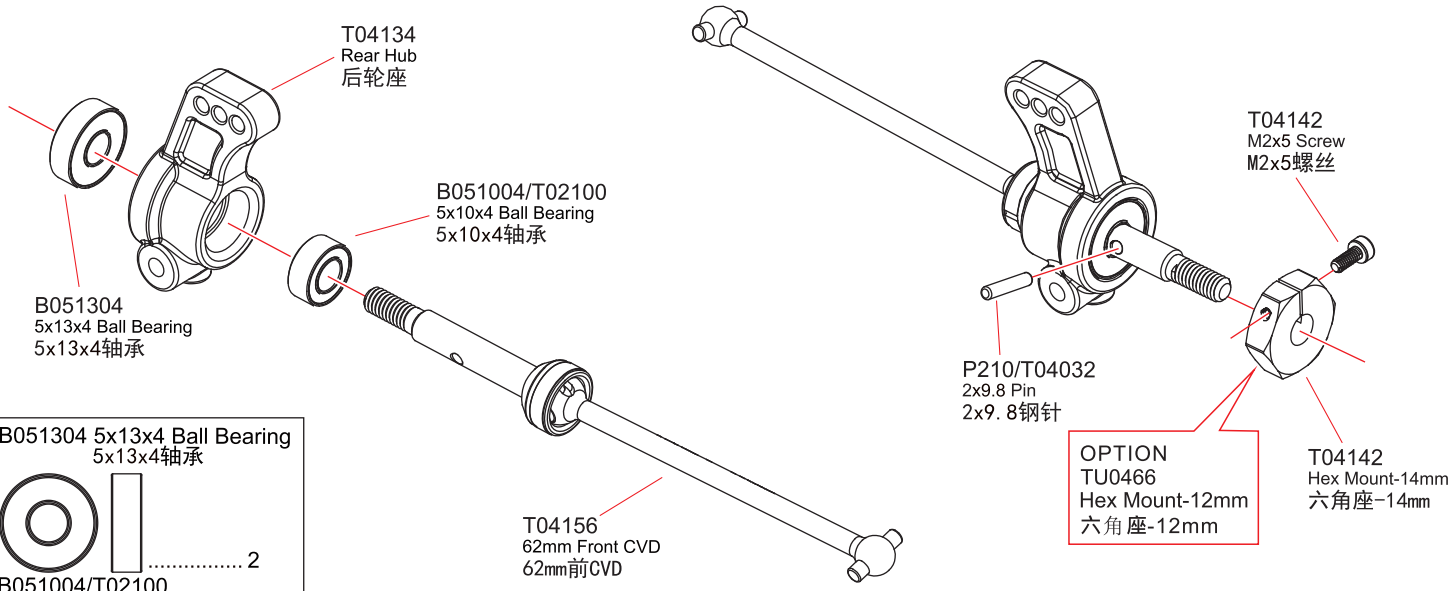

B051304 5x13x4 Ball Bearing
5x13x4轴承 2

B051004/T02100
5x10x4 Ball Bearing
5x10x4轴承 2

T04142 M2x5 Screw
M2x5螺丝 2

P210/T04032 2x9.8 Pin
2x9. 8钢针 2

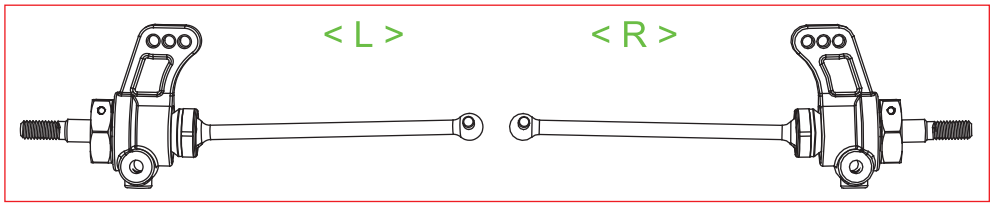

25 Rear Lower Arm 后下摆臂 Bag-D

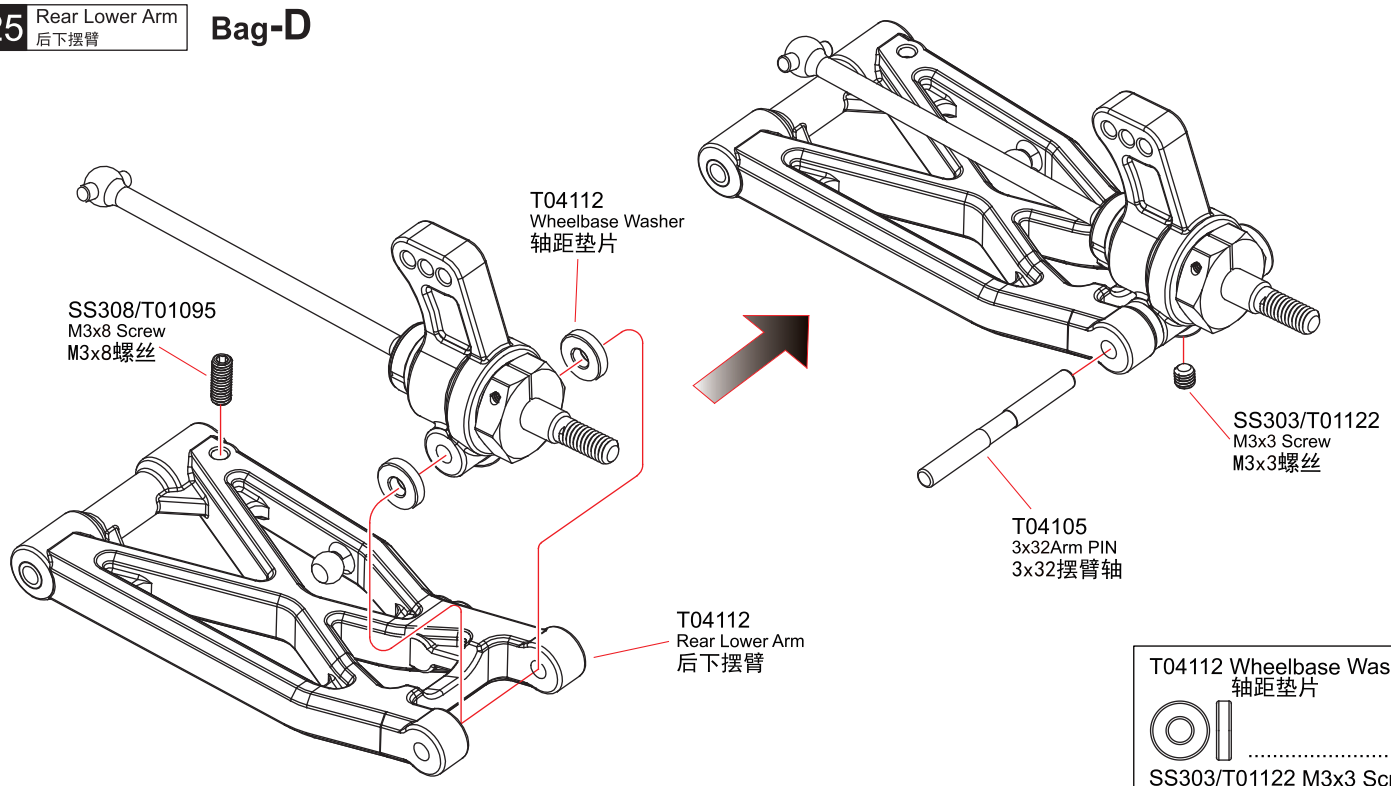

T04112 Wheelbase Washer
轴距垫片 4

SS303/T01122 M3x3 Screw
M3x3螺丝 2

SS308/T01095 M3x8 Screw
M3x8螺丝 2

L/R Assemble both Left and Right
組裝左和右

x2 Assemble as many times as specified
需組裝數量

26 Rear Suspension Arm 后摆臂

Bag-D

T04035 3x51 Arm PIN 3x51摆臂轴 2	FS312/T08805 M3x12 Screw M3x12螺丝 2

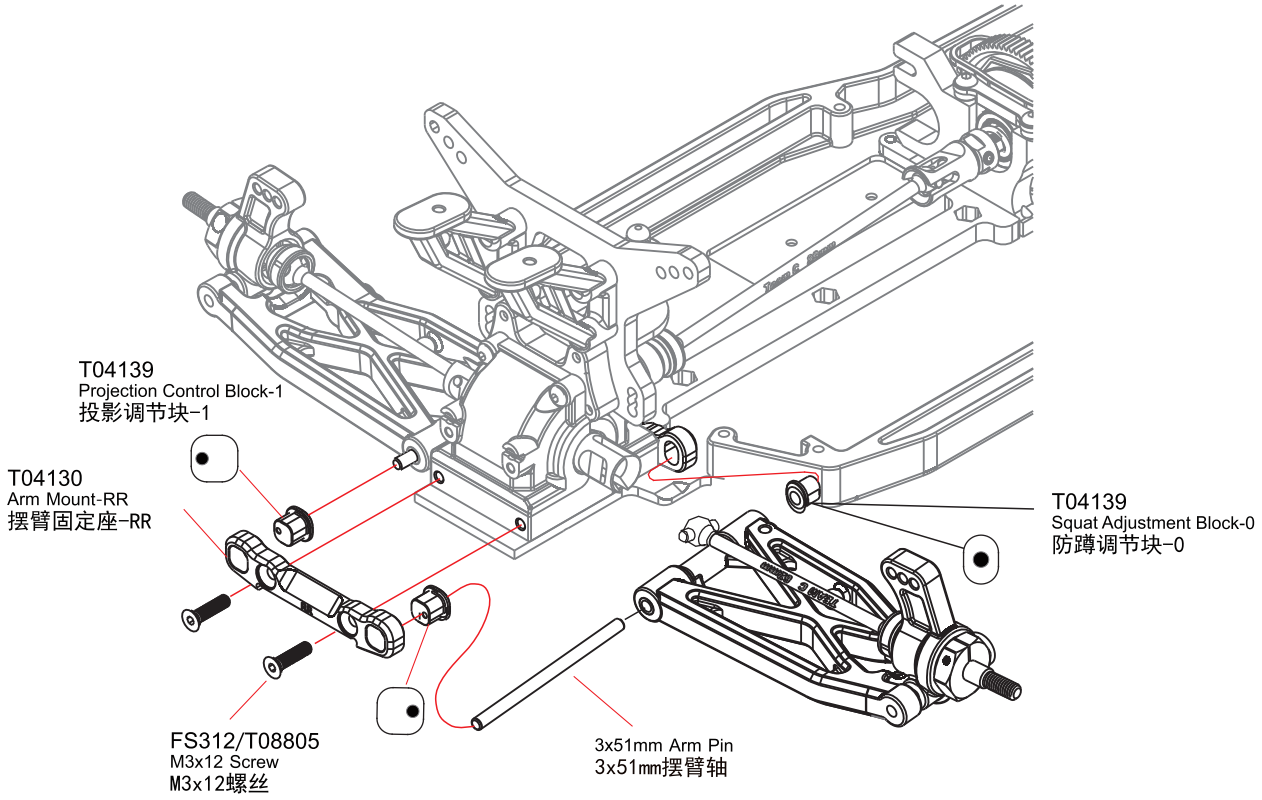

ANTI-SQUAT

RF	RR	(°)
RF	RR	=2°
RF	RR	=1°
RF	RR	=3°
RF	RR	=3°
RF	RR	=2°
RF	RR	=4°
RF	RR	=1°
RF	RR	=0°
RF	RR	=2°

ROLL-CENTER

FF	FF	(mm)
RF	RR	=+0.9mm
RF	RR	=0mm
RF	RR	=-0.9mm

TOE-IN

RF	RR	(°)
RF	RR	=2.5°
RF	RR	=3.5°
RF	RR	=1.5°

L/R Assemble both Left and Right
組裝左和右

27 Rear Turnbuckle 后拉杆 Bag-D

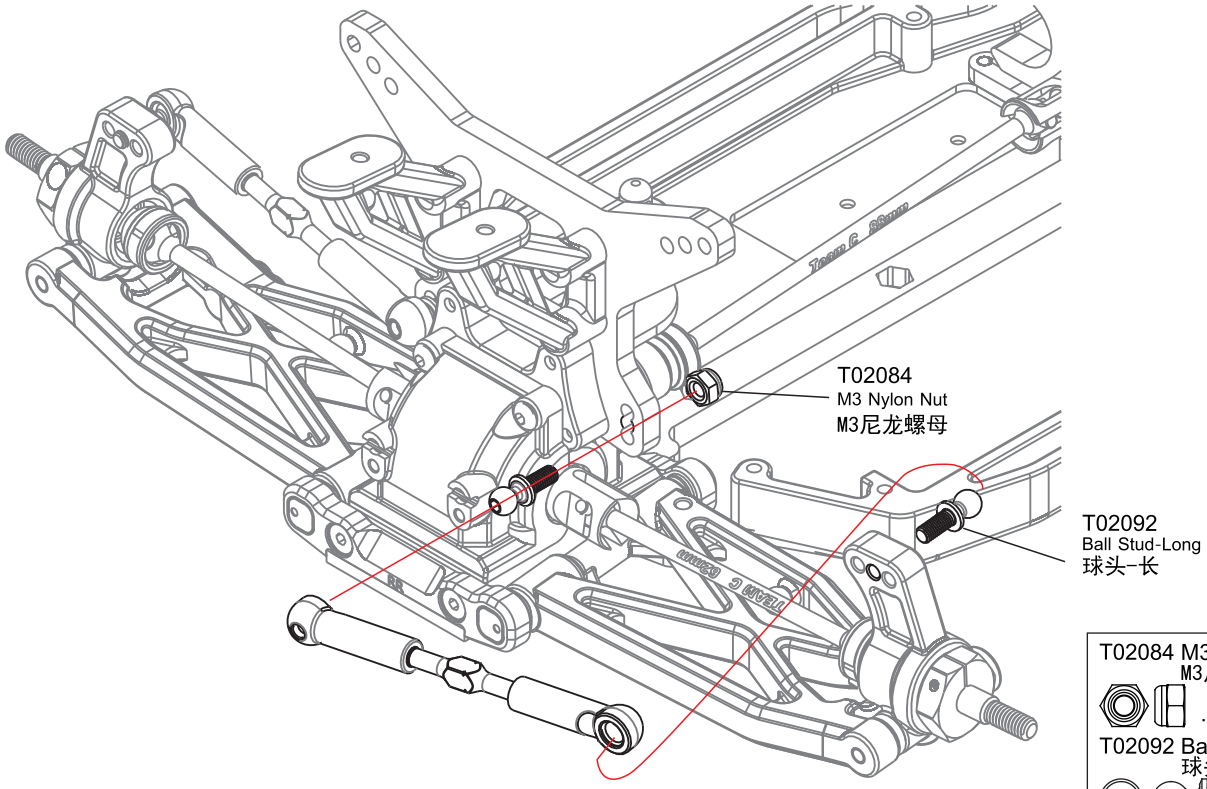

T02084 M3 Nylon Nut
M3尼龙螺母
.....2

T02092 Ball Stud-Long
球头-长
.....4

28 Front Swaybar 前防倾杆 Bag-D

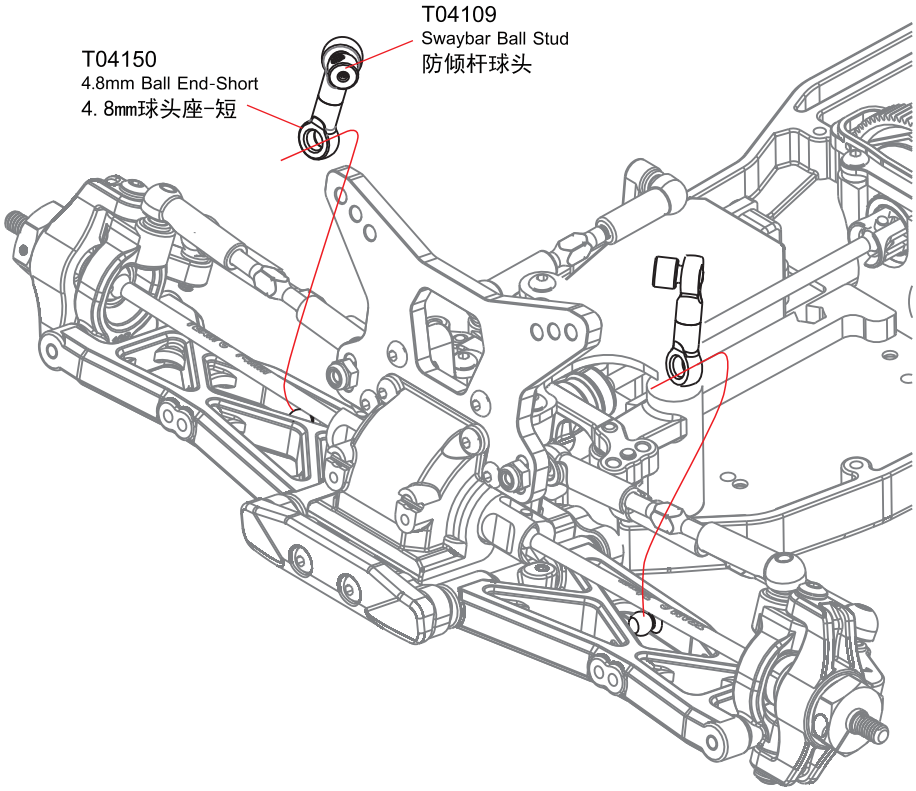

x2

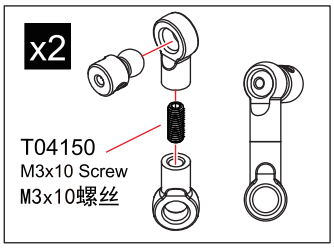

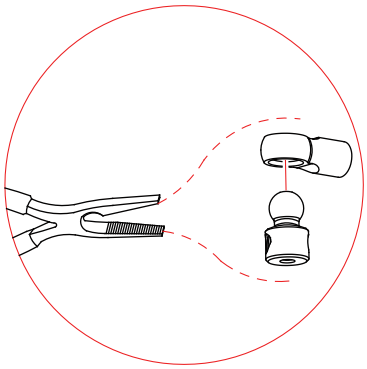

L/R Assemble both Left and Right
組裝左和右

29 Front Swaybar 前防倾杆 Bag-D

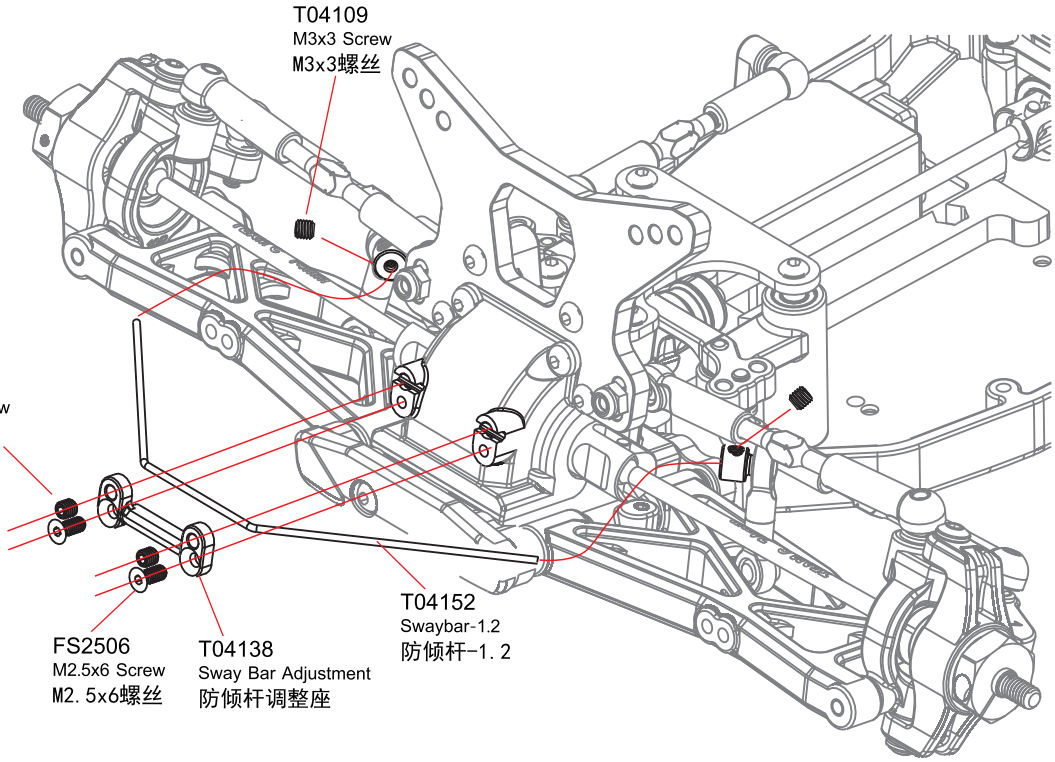

SS303/T04109 M3x3 Screw
M3x3螺丝
.....4
FS2506 M2.5x6 Screw
M2. 5x6螺丝
.....2

30 Rear Swaybar 后防倾杆 Bag-D

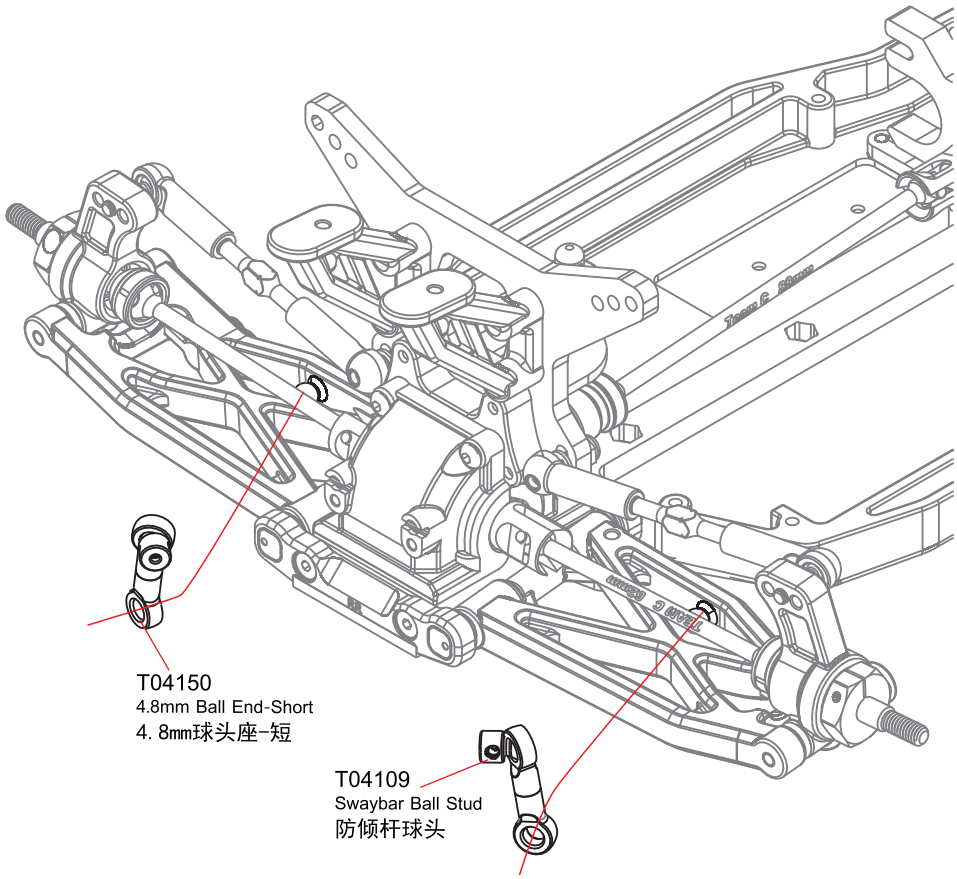

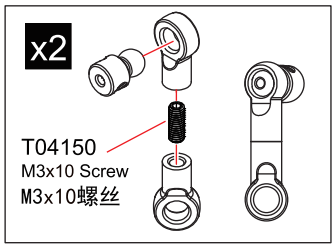

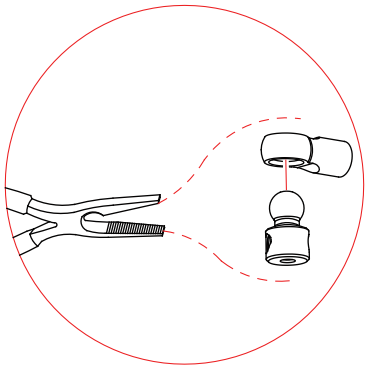

31 Rear Swaybar 后防倾杆 Bag-D

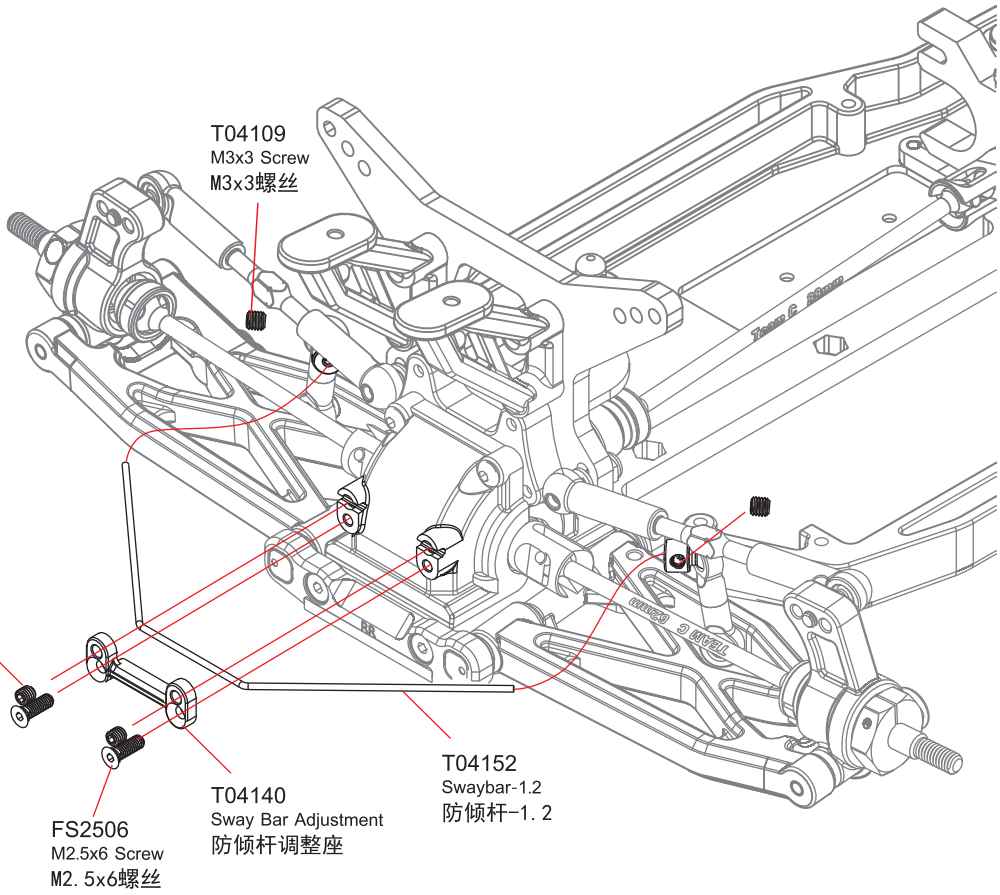

SS303/T04109 M3x3 Screw
M3x3螺丝
.....4
FS2506 M2.5x6 Screw
M2. 5x6螺丝
.....2

32 Shock Absorber 避震器 Bag-E

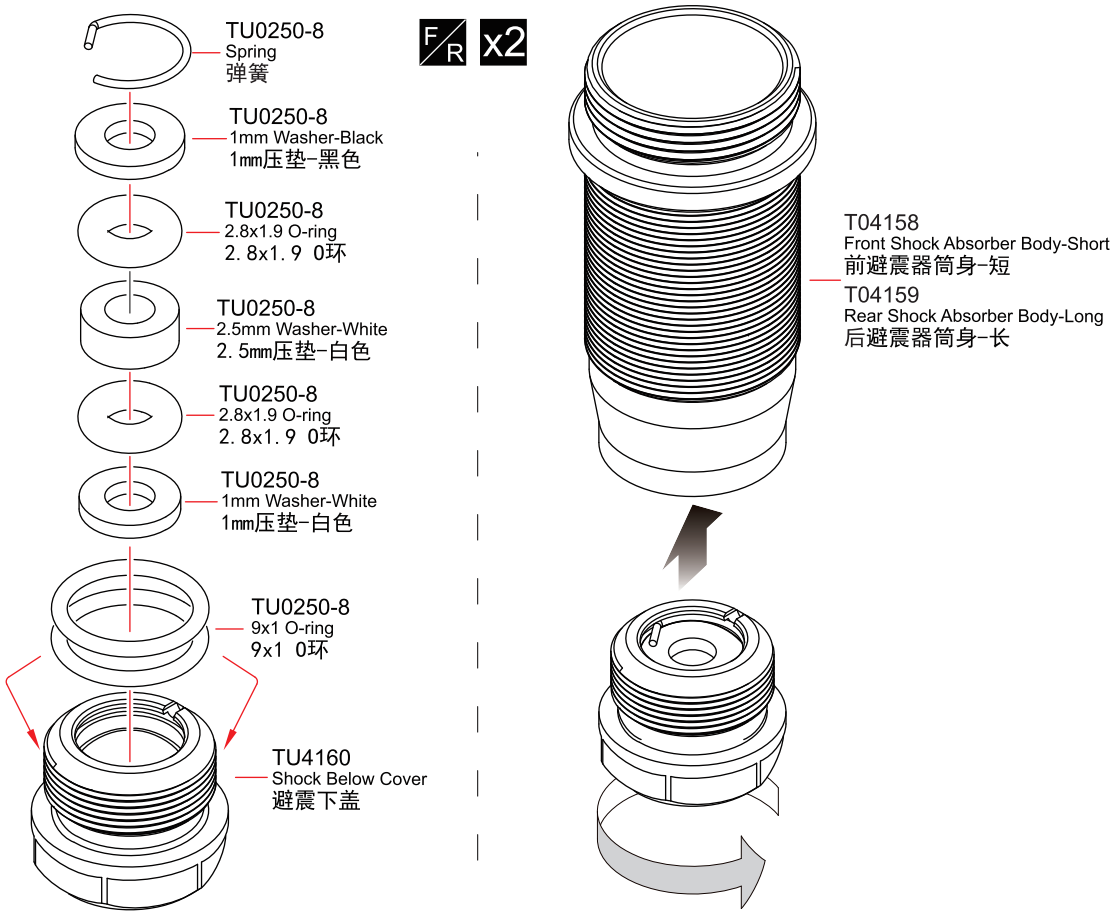

TU0250-8 Spring
弹簧
.....4
TU0250-8 1mm W asher-Black
1mm压垫-黑色
.....4
TU0250-8 1mm W asher-White
1mm压垫-白色
.....4
TU0250-8 2.5mm W asher-White
2. 5mm压垫-白色
.....4
TU0250-8 2.8x1.9 O-ring
2. 8x1. 9 0环
.....8
TU0250-8 9x1 O-ring
9x1 0环
.....8

F/R Assemble both front and rear
組裝前面和後面

x2 Assemble as many times as specified
需組裝數量

33 Shock Absorber 避震器 Bag-E

TU0250-1/TU0250-2 2.3 E-ring
2. 3 E扣 8

TU0250-7 Front Piston-Black
前活塞-黑色 2

TU0250-7 Rear Piston-White
后活塞-白色 2

TU0250-8 12x1 O-ring
12x1 0环 4

T02187 5.8 Ball End
5. 8球头座 4

T02062 5.8 Ball Stud
5. 8球头 4

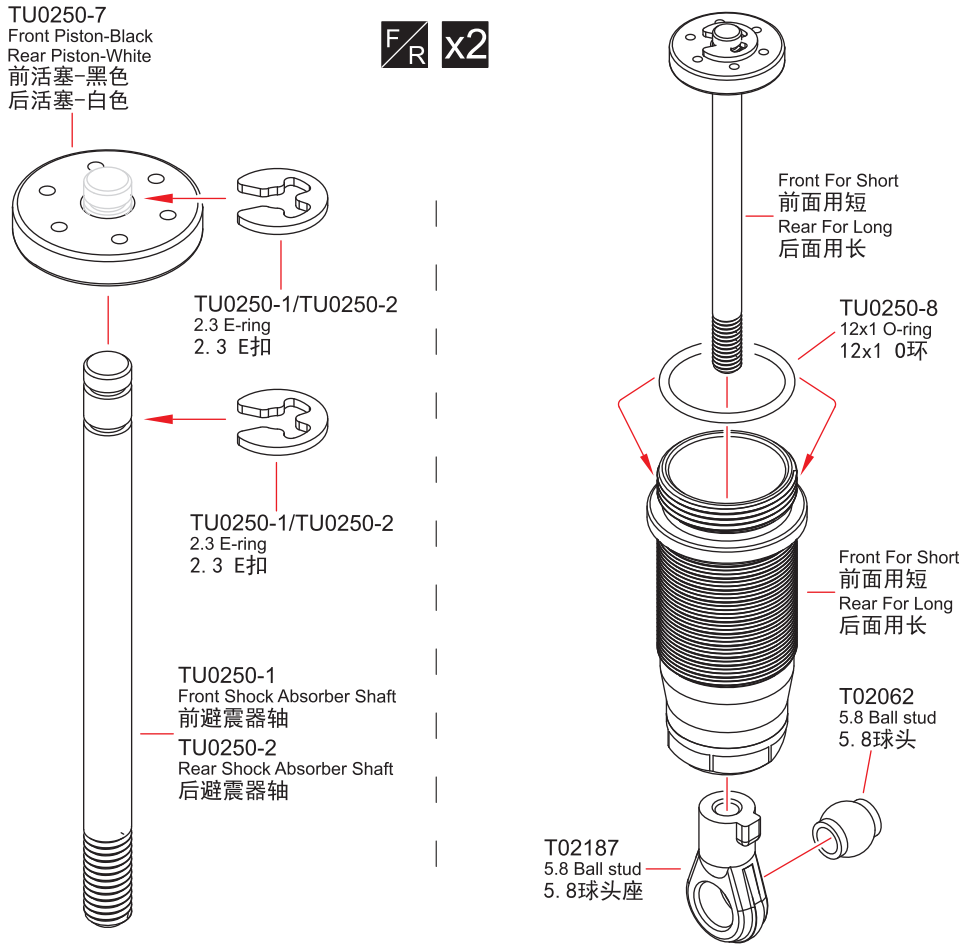

34 Shock Absorber 避震器 Bag-E

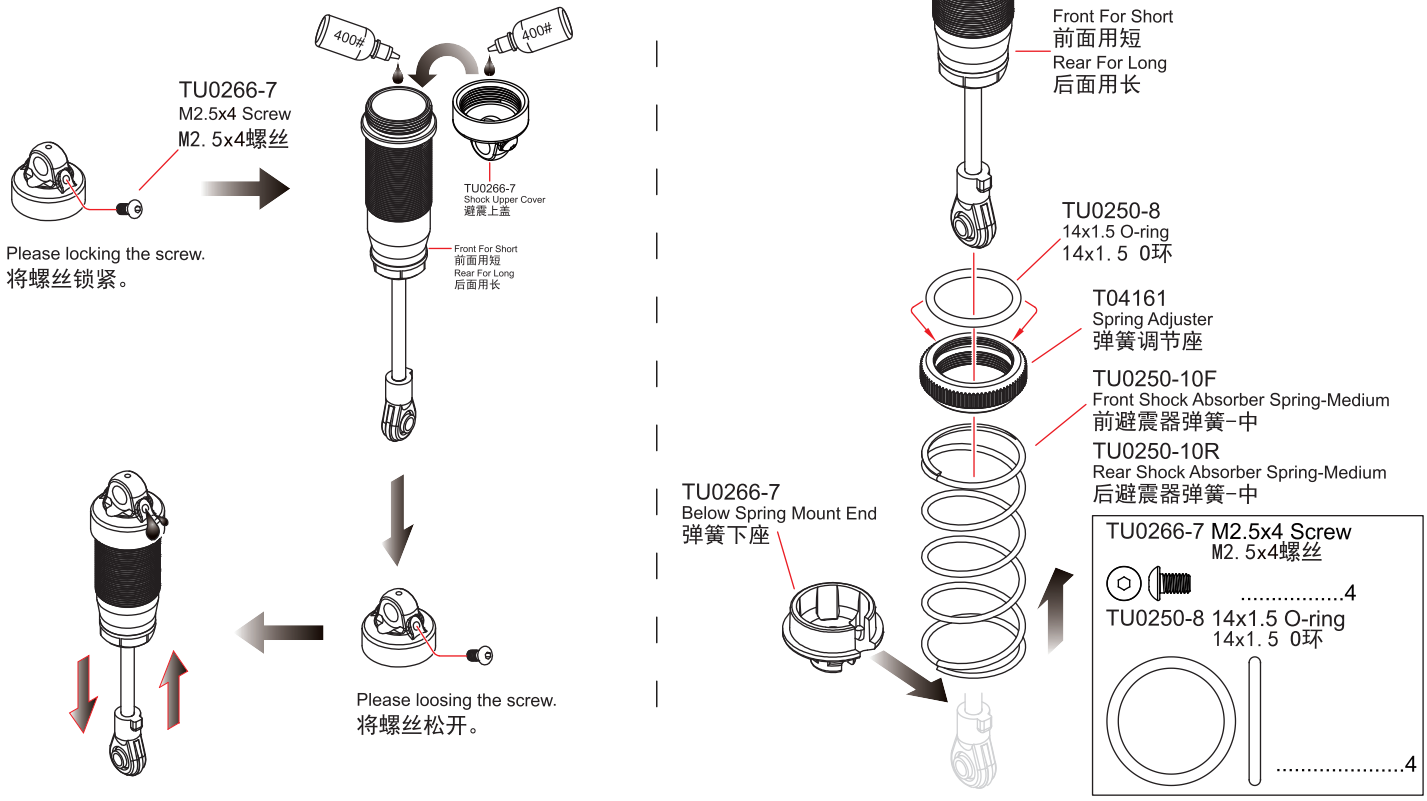

F/R Assemble both front and rear
組裝前面和後面

x2 Assemble as many times as specified
需組裝數量

35 Front Shock Absorber 前避震器 Bag-E

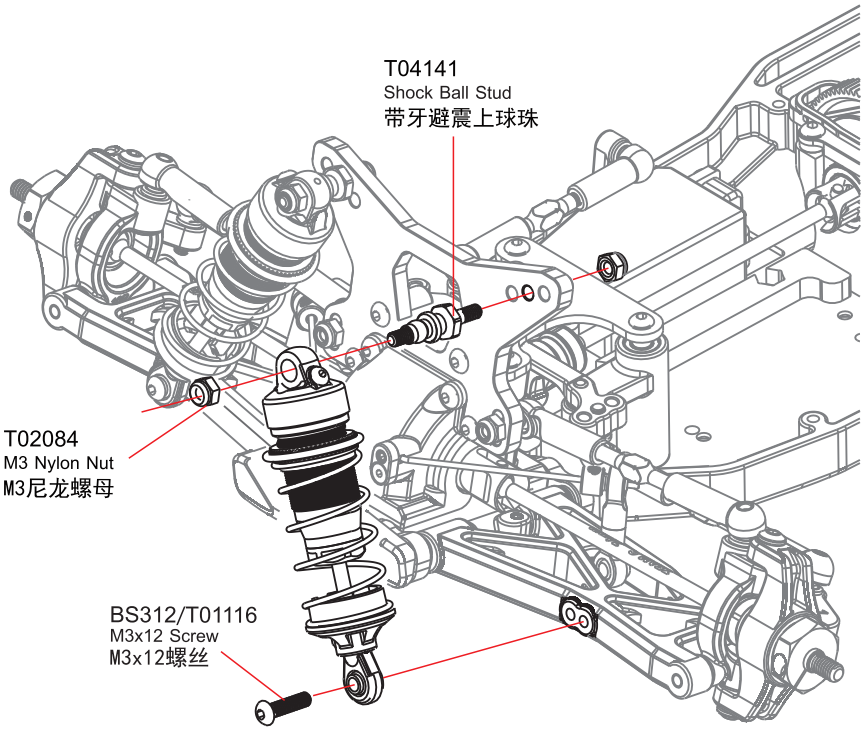

T04041 Shock Ball Stud
带牙避震上球珠 2

T02084 M3 Nylon Nut
M3尼龙螺母 4

BS312/T01116 M3x12 Screw
M3x12螺丝 2

36 Rear Shock Absorber 后避震器 Bag-E

T04041 Shock Ball Stud
带牙避震上球珠 2

T02084 M3 Nylon Nut
M3尼龙螺母 4

BS312/T01116 M3x12 Screw
M3x12螺丝 2

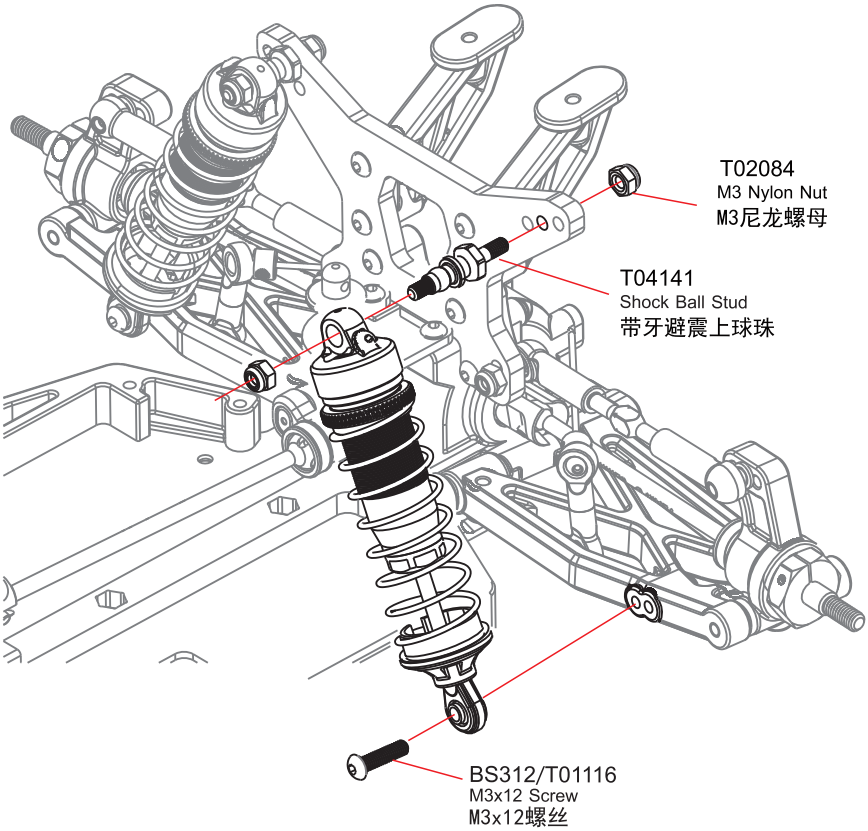

L/R Assemble both Left and Right
組裝左和右

37 Battery Post 电池柱 Bag-F

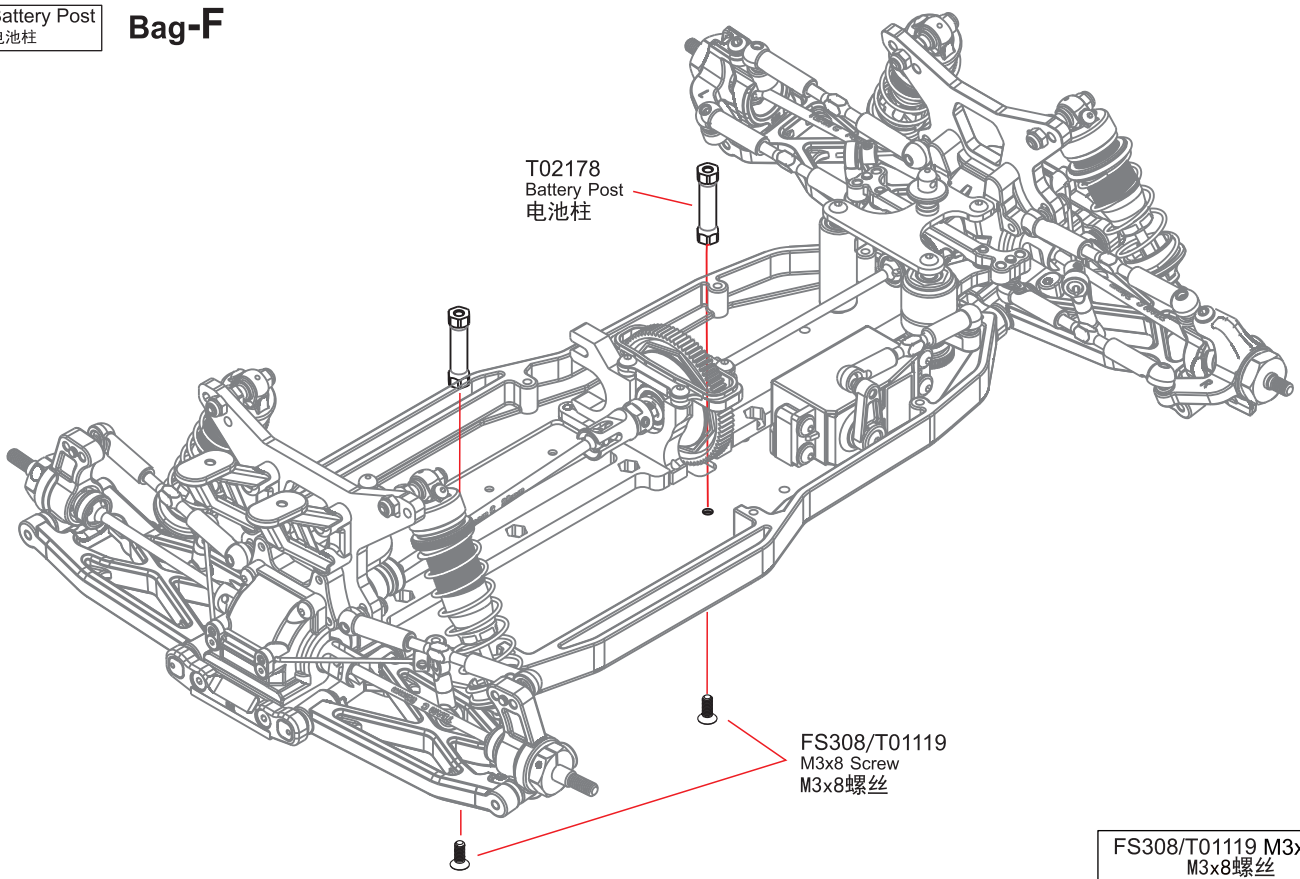

FS308/T01119 M3x8 Screw
M3x8螺丝
.....2

38 Motor 马达 Bag-F

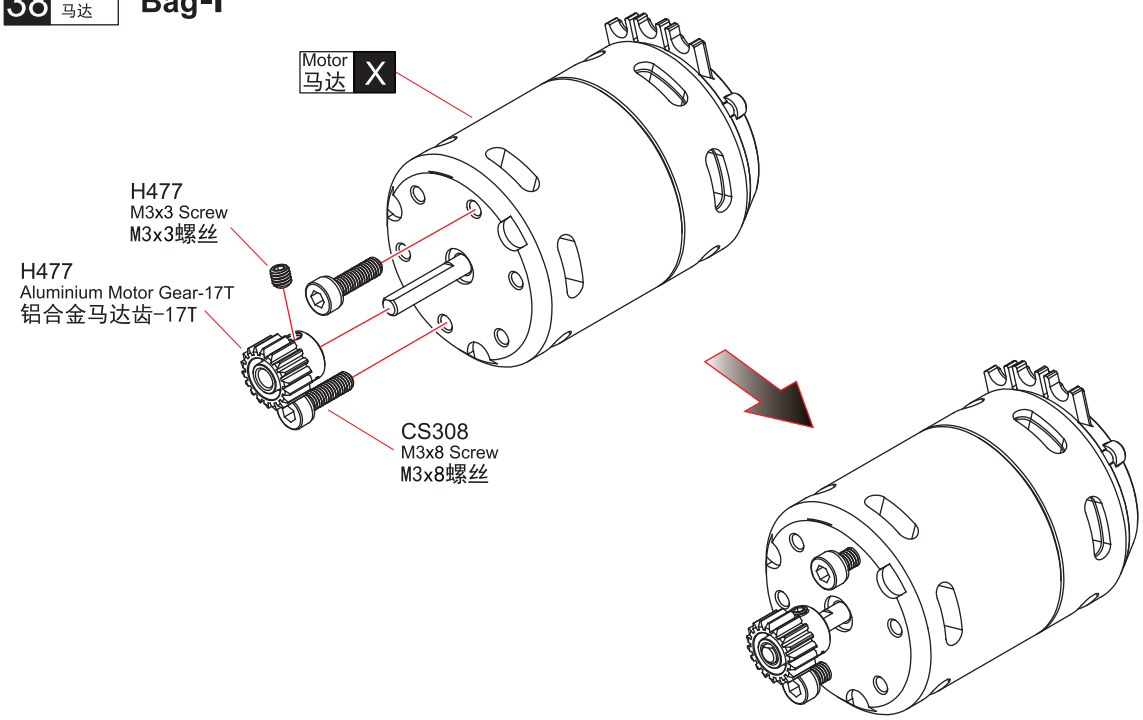

H477 M3x3 Screw
M3x3螺丝
.....1
CS308 M3x8 Screw
M3x8螺丝
.....2

Gear Ratio 齿 轮 比	12.5	11.7	11.1	10.5	10.0
Pinion Gear 马 达 齿	16T	17T	18T	19T	20T

X Must be purchased separately
需另購物品

39 Motor 马达 Bag-F

Please install the motor, and then lock the screw.
请将马达装进后把螺丝锁紧！

Tighten the screws with one sheet of paper inserted between both gears.
两齿轮之间的间隙大约为一张普通纸的厚度。

40 ESC/Receiver 电子变速器/接收机 Bag-F

ESC 电子变速器 X

Receiver 接收机 X

T02087
Double-sided Tape
雙面膠

X Must be purchased separately
需另購物品

41 Battery 电池 Bag-F

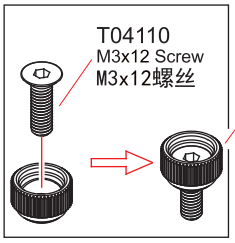

T04110
Adjustment Nut
调车尺螺帽

T02246
Battery Holder
电池压板

Battery 电池 X

T04110 M3x12 Screw
M3x12螺丝
.....2

42 Wheel 轮胎 Bag-G

< Front > x2

X

X

TU0442W
Front Wheel
前轮框

< Rear > x2

X

X

TU0444W
Rear Wheel
后轮框

F/R x2

After fitting wheels to tyres, apply instant glue as shown
轮胎装好后如图打胶水

Glue 膠水

x2 Assemble as many times as specified
需組裝數量

F/R Assemble both front and rear
組裝前面和後面

X Must be purchased separately
需另購物品

43 Wheel 轮胎 Bag-G

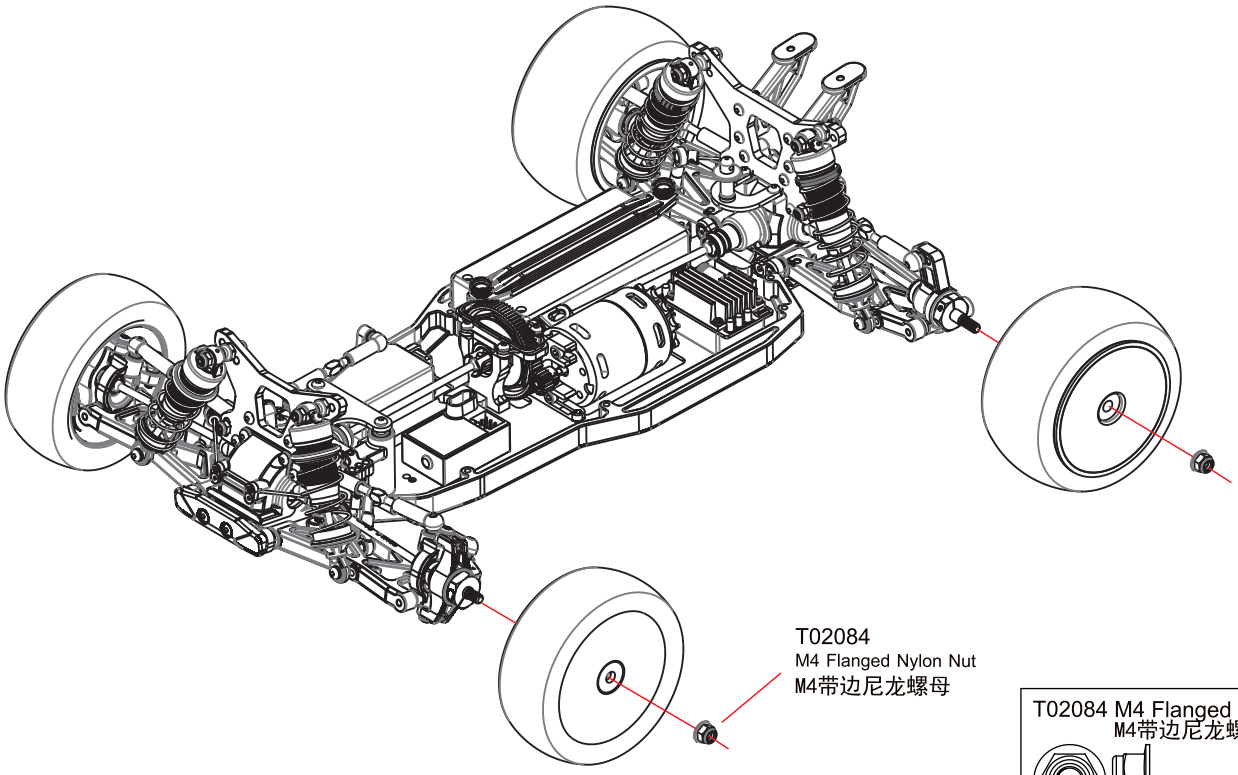

T02084 M4 Flanged Nylon Nut
M4带边尼龙螺母
.....4

44 Wing 尾翼 Bag-G

FS310/T01120 M3x10 Screw
M3x10螺丝
.....2

T04145 Tail Gasket
尾翼垫片
.....2

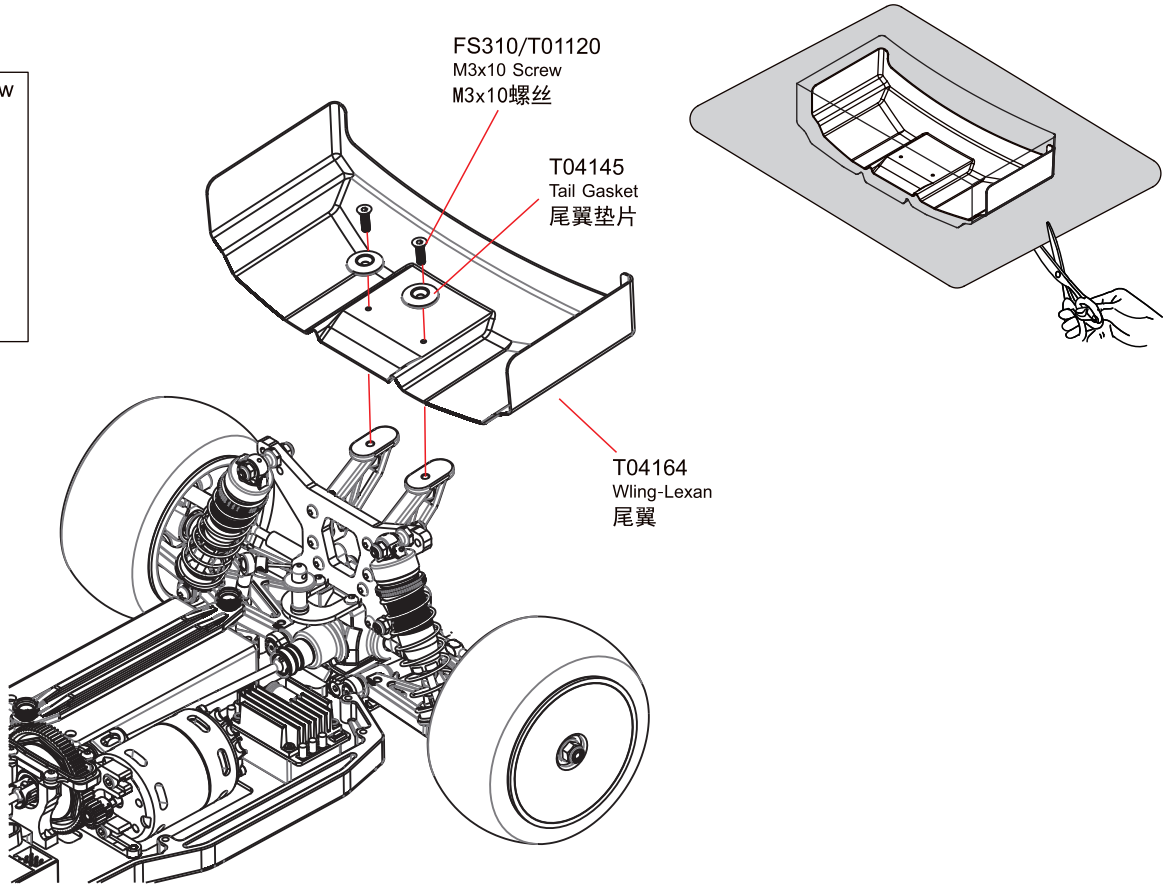

L/R Assemble both Left and Right
組裝左和右

45 Body 车壳 Bag-G

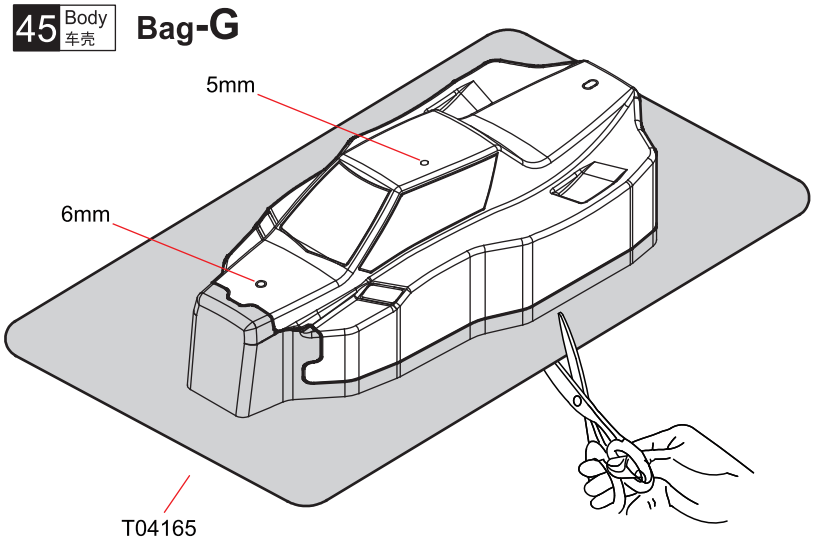

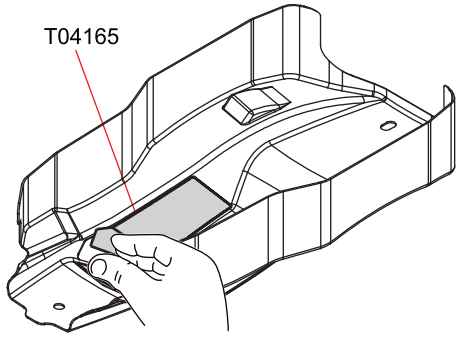

Mask the windows from the inside.
在车窗内壁贴上遮盖贴纸。

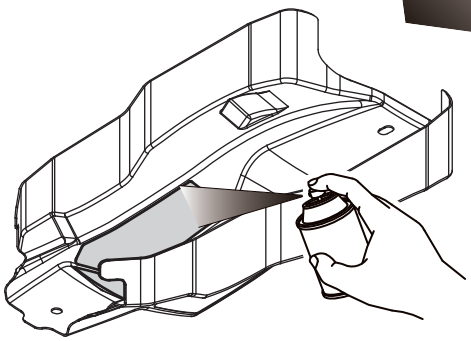

Paint the body shell from the inside using spray colors.
在车壳内壁喷漆。

46 Body 车壳 Bag-G

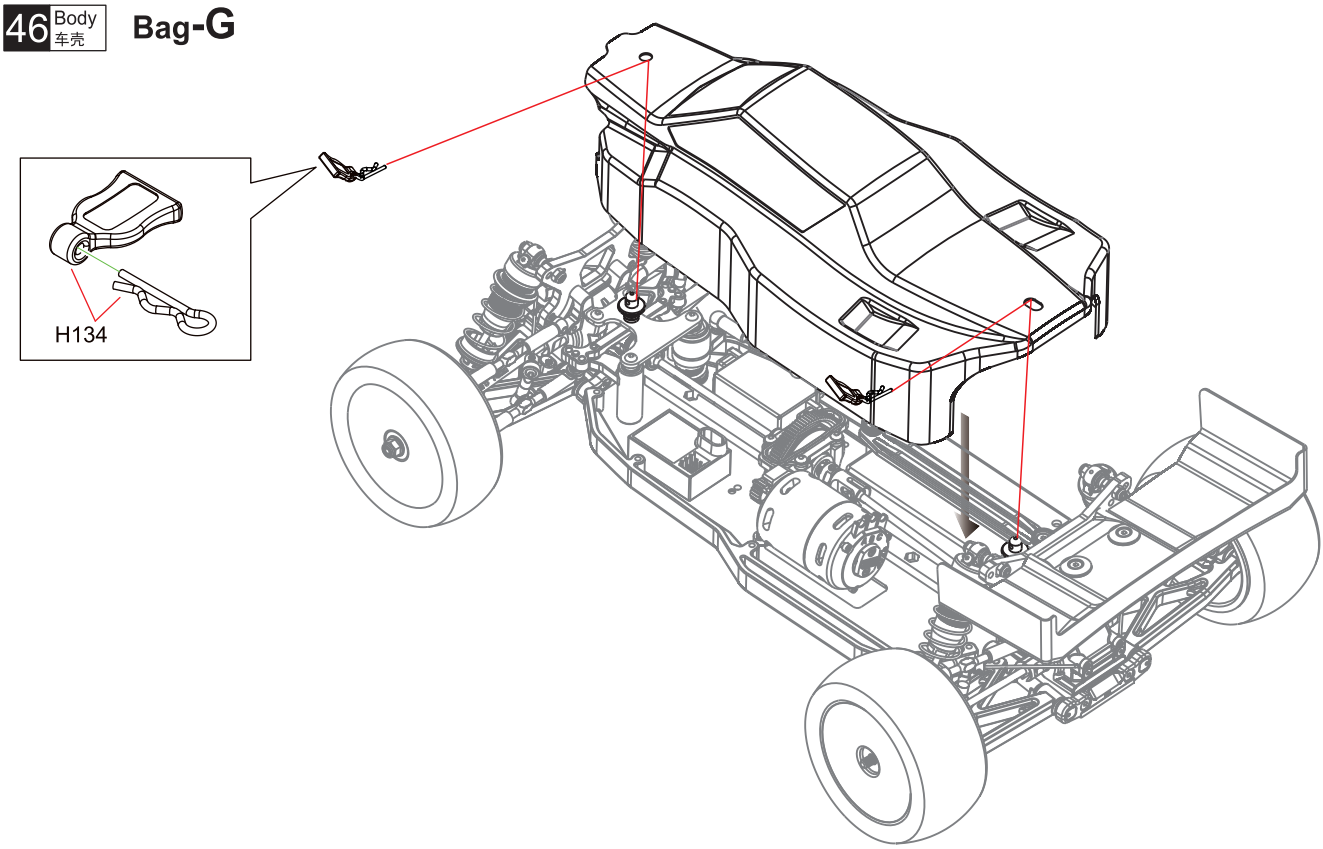

x4 Assemble as many times as specified
需組裝數量

EXPLODED VIEW

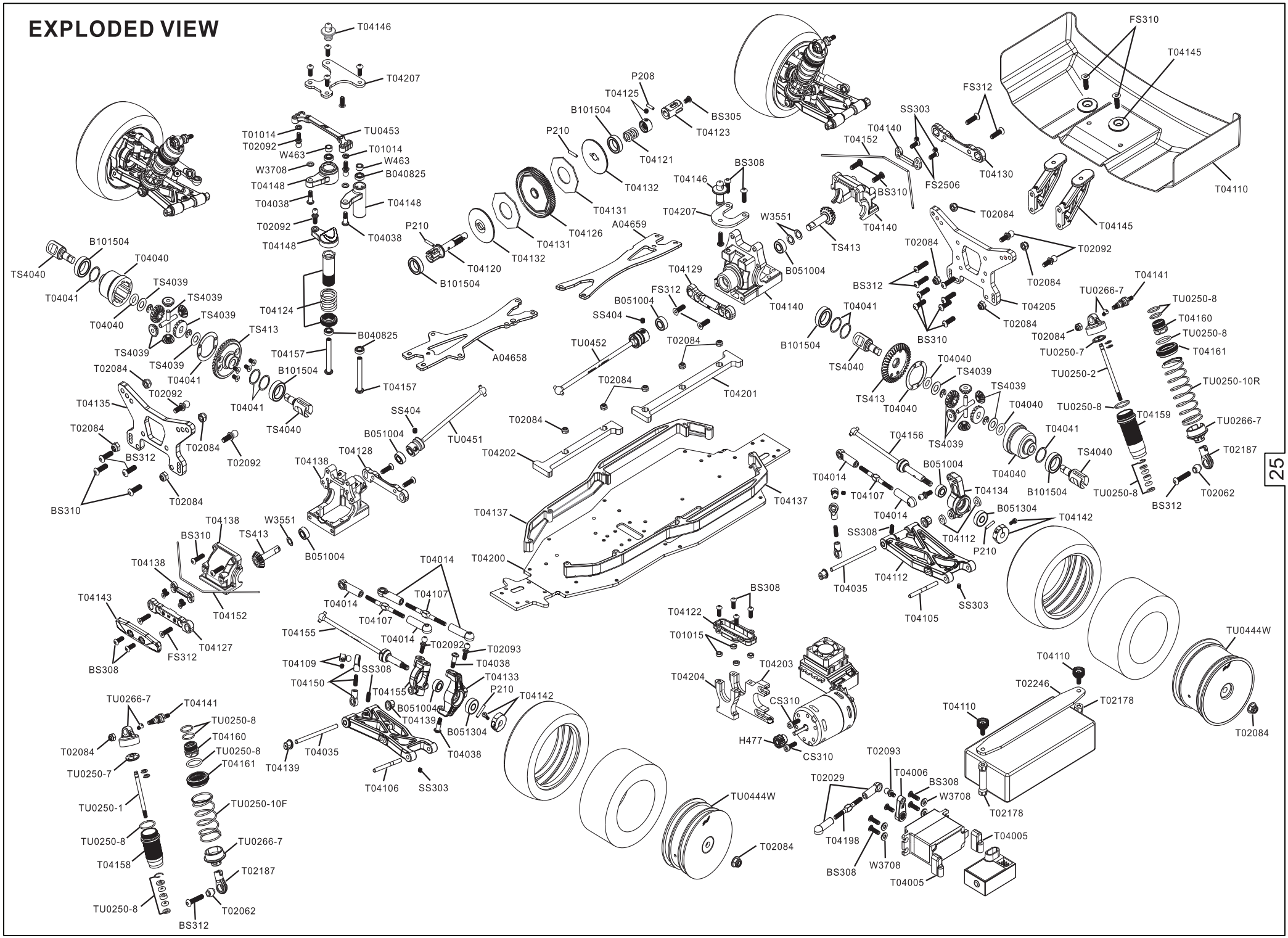

Parts list for TM4 off-road buggy - 1　TM4配件包-1

T04200

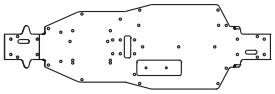

Main Chassis
主底盘 1pcs

T04201

Front Carbon Chassis Brace
前碳纖補強板

T04202

Rear Carbon Chassis Brace
后碳纖補強板

T04203

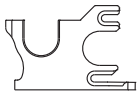

Motor Mount
马达座 1pcs

T04204

Motor Mount-F
马达座-F 1pcs

T04207

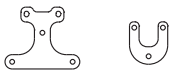

Carbon Front / Rear Plate
車殼柱固定板 2pcs

T04105

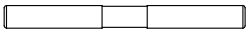

3x32 Arm Pin
3x32摆臂轴 2pcs

T04106

3x33 Arm Pin
3x33摆臂轴 2pcs

T04107

3x45 Turnbuckle
3x45拉杆 2pcs

T04108

3x35 Turnbuckle
3x35拉杆 1pcs

T04109

M3x3 Screw
螺丝 2pcs

Swaybar Ball Stud
防倾杆球头 2pcs

T04111

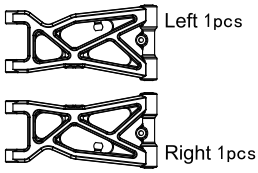

Left 1pcs

Right 1pcs

Front Lower Arm
前下摆臂

T04112

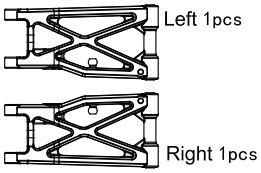

Left 1pcs

Right 1pcs

Rear Lower Arm
后下摆臂

Wheelbase Washer
轴距垫片 4pcs

T04113

Left 1pcs　Right 1pcs

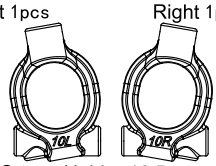

C-type Holder 10 Degree
C型座10° 1pcs

TU0442W

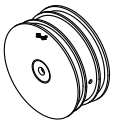

Front Wheel
前轮框 2pcs

TU0444W

Rear Wheel
后轮框 2pcs

T04114

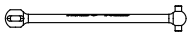

62mm Rear CVD Bone
62mm后CVD骨 2pcs

T04115

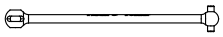

74mm Front CVD Bone
74mm前CVD骨 2pcs

TU0451

78mm Center CVD
78mm中CVD 1pcs

TU0452

88mm Center CVD
88mm中CVD 1pcs

T04118

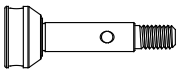

Front CVD Axle
前CVD轴 2pcs

T04119

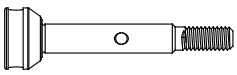

Rear CVD Axle
后CVD轴 2pcs

T04120

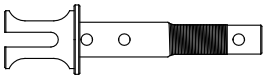

Slipper Shaft
扭限轴 1pcs

T04121

Slipper Spring
扭限弹簧 1pcs

T04122

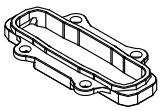

Center Diff Cover
中差上顶板 1pcs

T04123

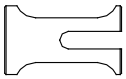

Center Diff Connecting Cup
中差接杯 1pcs

T04124

Servo Saver Body
缓冲筒身 1pcs

Steering Buffer Spring
转向缓冲弹簧 1pcs

Buffer Prop Adjusting Nut
缓冲支柱调整螺帽 1pcs

T04125

M3x3 Screw
螺丝 1pcs

Slipper Nut
扭限调整环 1pcs

T04126

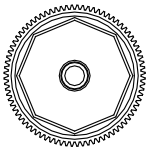

Spur Gear-80T
齿轮-80T 1pcs

T04127

Arm Mount-FF
摆臂固定座-FF 1pcs

T04128

Arm Mount-FR
摆臂固定座-FR 1pcs

T04129

Arm Mount-RF
摆臂固定座-RF 1pcs

T04130

Arm Mount-RR
摆臂固定座-RR 1pcs

Parts list for TM4 off-road buggy - 2　TM4配件包-2

H134

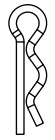
Small Clip
小号插销
6pcs

Small Clip Holder
小号插销固定座
6pcs

T04131

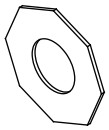
Slipper Clutch Pad
八角扭限摩擦片 2pcs

T04132

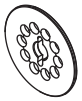
Slipper Hub Set-A
扭限盤-A 1pcs

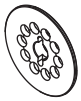
Slipper Hub Set-B
扭限盤-B 1pcs

T02087

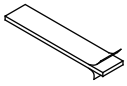
Double-sided Tape
双面胶 1pcs

Antenna Cap
天线管帽 1pcs

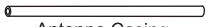
Antenna Casing
天线套管 1pcs

W3551/T01014

3x5.5x1 Washer
垫片 6pcs

T04133

Left 1pcs　Right 1pcs

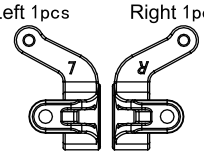
Steering Arm
转向臂

T04134

Left 1pcs　Right 1pcs

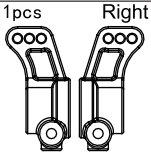
Rear Hub
后轮座

T04135

Front Shock Tower
前避震器架 1pcs

T04205

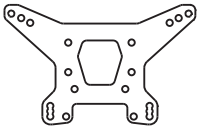
Rear Shock Tower
后避震器架 1pcs

T04137

Left 1pcs

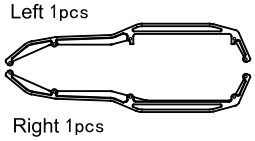
Right 1pcs

Side Panel
侧板

T04138

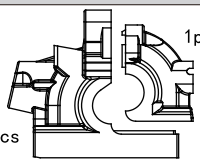
1pcs
1pcs
Front Gear-box
前齿轮箱

Sway Bar Adjustment
防倾杆调整座 1pcs

T04139

Projection Control Block-0
投影调节块-0 2pcs

Projection Control Block-1
投影调节块-1 2pcs

Projection Control Block-2
投影调节块-2 2pcs

Squat Adjustment Block-0
防蹲调节块-0 6pcs

Squat Adjustment Block-1
防蹲调节块-1 6pcs

T04140

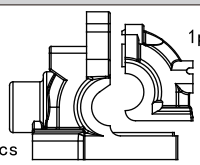
1pcs
1pcs
Rear Gear-box
后齿轮箱

Sway Bar Adjustment
防倾杆调整座 1pcs

T04006

1pcs　1pcs　1pcs

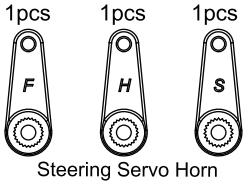

Steering Servo Horn
转向伺服臂 1pcs

T04141

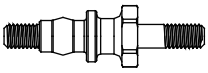
Shock Ball Stud
带牙避震器上球珠 4pcs

T04142

2x5 Screw
螺丝 4pcs

Hex Mount-14mm
六角座-14mm 4pcs

T04143

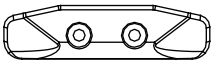
Anti-collision Plate
防撞板 1pcs

T02246

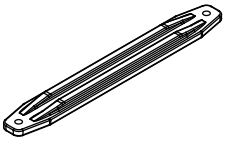
Battery Holder
电池压板 1pcs

T04145

Tail Gasket
尾翼垫片 2pcs

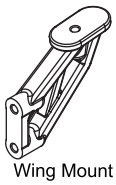
Wing Mount
尾翼架 2pcs

T04146

Front Car Shell Column
前车壳柱 1pcs

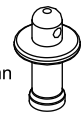
Rear Car Shell Column
后车壳柱 1pcs

TU0453

Steering Ackerman Plate
缓冲连接板 1pcs

T04148

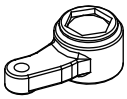
Servo Saver Top
缓冲座上 1pcs

Servo Saver Bottom
缓冲座下 1pcs

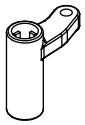
Servo Saver Left
缓冲座左 1pcs

T04149

Central Reinforcing Bar
中央补强条 1pcs

T04014

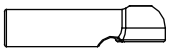
4.8mm Ball End-Long
4. 8mm球头座-长 6pcs

T04150

M3x10 Screw
螺丝 4pcs

4.8mm Ball End-Short
4. 8mm球头座-短 8pcs

T02029

4.8mm Ball End
4. 8mm球头座 6pcs

T04151

Swaybar
防倾杆 2pcs

T04152

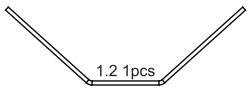

Swaybar
防倾杆 2pcs

T04153

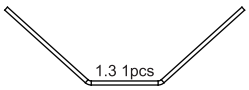

Swaybar
防倾杆 2pcs

T04154

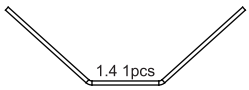

Swaybar
防倾杆 2pcs

Parts list for TM4 off-road buggy - 3　TM4配件包-3

T04155

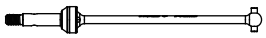

74mm Front CVD
74mm前CVD 2pcs

T04156

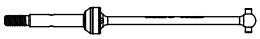

62mm Rear CVD
62mm后CVD 2pcs

TS4039

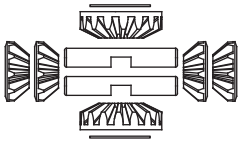

Diff Gear Set
差速齿轮组

T02084

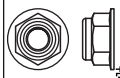

M4 Flanged Nylon Nut
带边尼龙螺母 6pcs

M3 Nylon Nut
尼龙螺母 6pcs

TS4040

3.0 E-ring
3.0 E扣 2pcs

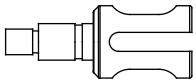

Diff Connecting Cup
差速接杯 2pcs

TU0250-1

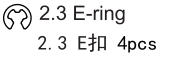

2.3 E-ring
2.3 E扣 4pcs

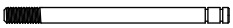

Front Shock Absorber Shaft
前避震器轴 2pcs

TU0250-2

2.3 E-ring
2.3 E扣 4pcs

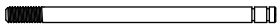

Rear Shock Absorber Shaft
后避震器轴 2pcs

T04158

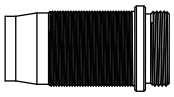

Front Shock Absorber Body
前避震器筒身 2pcs

B051004/T02100

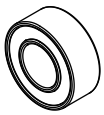

5x10x4 Ball Bearing
轴承 6pcs

B101504/T02099

10x15x4 Ball Bearing
轴承 6pcs

T04159

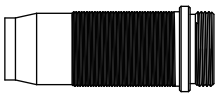

Rear Shock Absorber Body
后避震器筒身 2pcs

TU0250-5

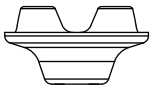

Below Spring Mount End
弹簧下座 4pcs

TU0250-8

1mm Washer-White
1mm压垫-白色
4pcs

1mm Washer-Black
1mm压垫-黑色
4pcs

2.5mm Washer-White
2.5mm压垫-白色 4pcs

Spring
弹簧
4pcs

2.8x1.9 O-Ring
2.8x1.9 0环
4pcs

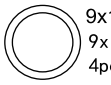

9x1 O-Ring
9x1 0环
4pcs

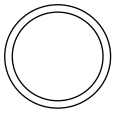

12x1 O-Ring
12x1 0环
4pcs

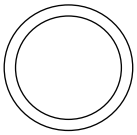

14x1.5 O-Ring
14x1.5 0环
4pcs

TU0250-7

Front Piston-Black
前活塞-黑色
2pcs

Rear Piston-White
后活塞-白色
2pcs

TU0250-10F

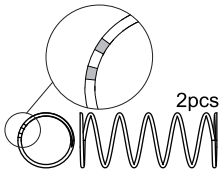

2pcs

Front Shock Absorber Spring-Medium
前避震器弹簧-中

TU0250-10R

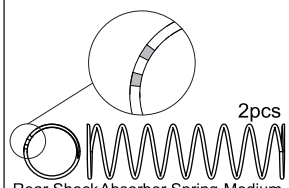

2pcs

Rear Shock Absorber Spring-Medium
后避震器弹簧-中

T04160

Shock Below Cover
避震下盖 4pcs

T04161

Spring Adjuster
弹簧调节座 4pcs

T04040

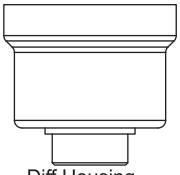

Diff Housing
差速壳 1pcs

4.8x1.6 O-ring
4.8x1.6 0环
1pcs

10x12x0.2 W asher
10x12x0.2垫片 2pcs

M2.5x6 Screw
M2.5x6螺丝 4pcs

Diff Pads
差速垫片 1pcs

T04041

16T Gear
16T齿轮 1pcs

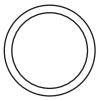

10x12x0.2 W asher
10x12x0.2垫片
2pcs

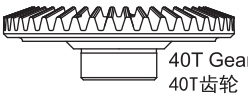

40T Gear
40T齿轮 1pcs

4.8x1.6 O-ring
4.8x1.6 0环
1pcs

T04164

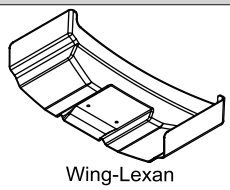

Wing-Lexan
尾翼 1pcs

TU0262-F

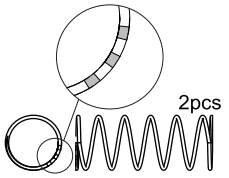

2pcs

Front Shock Absorber Spring-Soft
前避震器弹簧-软

TU0262-R

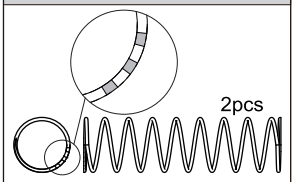

2pcs

Rear Shock Absorber Spring-Soft
后避震器弹簧-软

TU0260-F

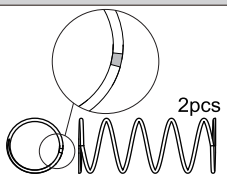

2pcs

Front Shock Absorber Spring-Hard
前避震器弹簧-硬

TU0260-R

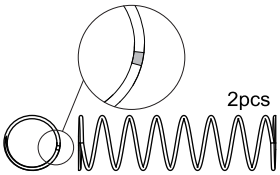

2pcs

Rear Shock Absorber Spring-Hard
后避震器弹簧-硬

T02187

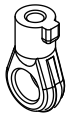

5.8 Ball End
球头座 4pcs

H477

3x3 Screw
1pcs

Aluminium Motor Gear-17T
铝合金马达齿-17T 1pcs

T02092

Ball Stud Sponge
球头海绵 2pcs

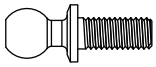

Ball Stud-Long
球头-长 2pcs

T04055

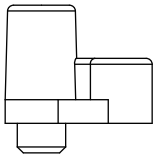

Antenna Pipe Mount
天线管座 1pcs

T04005

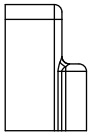

2pcs

1mm Spacer
2pcs

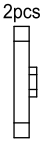

2mm Spacer
2pcs

Servo Mount
伺服机座

T02178

Battery Post
電池柱 2pcs

Parts list for TM4 off-road buggy - 4　TM4配件包-4

TU0266-7
Below Spring Mount end-Plastic
弹簧下座-尼龙 4pcs
Shock Absorber Top cover-Plastic
避震器上盖 -尼龙 4pcs
M2.5x4 Screw
M2.5x4螺丝 4pcs

T04022
Spring Buckle
弹簧扣 1pcs

T01057
2x9.8 pin
钢针 4pcs
CVD Shaft
CVD轴 4pcs

T04157
Servo Saver Post
缓冲柱 2pcs

T04038
M3 Screw
M3螺丝 6pcs

BS305/T08788
M3x5 Screw
M3x5螺丝 8pcs

BS308/T01114
M3x8 Screw
M3x8螺丝 10pcs

BS310/T01115
M3x10 Screw
M3x10螺丝 10pcs

FS308/T01119
M3x8 Screw
M3x8螺丝 10pcs

FS310/T01120
M3x10 Screw
M3x10螺丝 10pcs

FS312/T08805
M3x12 Screw
M3x12螺丝 8pcs

FS314/T08806
M3x14 Screw
M3x14螺丝 8pcs

CS308
M3x8 Screw
M3x8螺丝 10pcs

SS303/T01122
M3x3 Screw
M3x3螺丝 10pcs

SS308/T01095
M3x8 Screw
M3x8螺丝 10pcs

P210/T04032
2x9.8 Pin
2x9.8钢针 6pcs

T02062
5.8 Ball Stud
球头 4pcs

P208
2x7.8 Pin
2x7.8钢针 6pcs

B051304
5x13x4 Ball Bearing
5x13x4轴承 6pcs

B040803/T01074
4x8x3 Ball Bearing
4x8x3轴承 6pcs

W5802/86000
5x8x0.2 Washer
5x8x0.2垫片 6pcs

T04110
Adjustment Nut
调车尺螺帽 2pcs
M3x12 Screw
M3x12螺丝 2pcs

BS312/T01116
M3x12 Screw
M3x12螺丝 10pcs

FS2506
M2.5x6 Screw
M2.5x6螺丝 10pcs

T04035
3x51 Arm Pin
3x51摆臂轴 2pcs

T02093
Ball Stud Sponge
球头海绵 5pcs
Ball Stud-Short
球头-短 5pcs

W3708/T02081
3x7x0.8 Washer
3x7x0.8垫片 10pcs

T04162
Front Shock Absorber
前避震器

T04163
Rear Shock Absorber
后避震器

T04165
Body-Lexan
车壳 1pcs

W101202/TR4057
10x12x0.2 Washer
10x12x0.2垫片 8pcs

TM4

SETUP SHEET for the TeamC TM4

Driver _____

Track / City _____

Event _____ *Date* ____ / ____ / ____

Conditions

☐ *Smooth* ☐ Bumpy ☐ Low traction ☐ Med traction ☐ High traction

☐ Sandy ☐ Soft dirt ☐ Grass ☐ Hard soil ☐ Clay ☐ Wet ☐ Dry ☐ Dusty ☐ Other

Front Suspension

Shock Mounting&Camber link

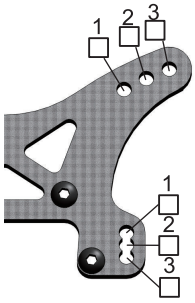

Anti-roll bar: ☐ _____ mm

Camber _____

Washers _____mm

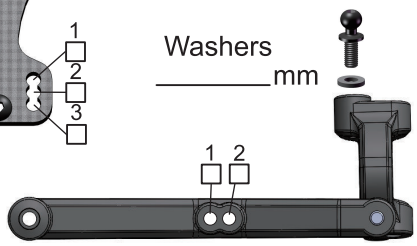

Toe-in (+)/Out (-)_____

Bump Steep Spacer_____

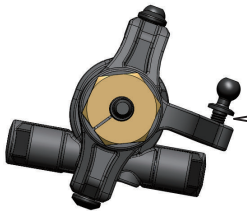

Washers _____mm

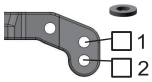

Ride height _____

Front Shocks

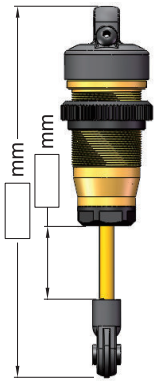

Spring(color)

☐ Black

☐ _____

Oil _____ wt

Piston #_____

Rear Suspension

Shock Mounting&Camber link

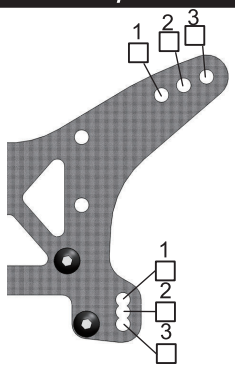

Anti-roll bar: ☐ _____ mm

Camber _____

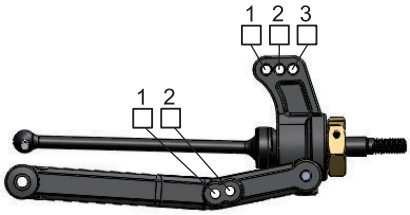

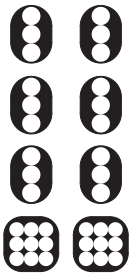

☐ FF

☐ FR

☐ RF

☐ RR

Wheelbase

☐ Long

☐ Medium

☐ Short

Ride height _____

Rear Shocks

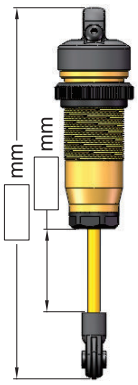

Spring(color)

☐ Black

☐ _____

Oil _____ wt

Piston #_____

Front Diff

Brand _____

Oil wt _____

Rear Diff

Brand _____

Oil wt _____

Front Tires&Wheels

Front Tires_____

Inserts_____ Wheels_____

Rear Tires&Wheels

Rear Tires _____

Inserts_____ Wheels_____

Batteries

*Servo*_____

Esc_____

Batteries _____

Motor

Motor _____

Pinion/Spur_____ /_____

Other

Wing_____

Wing Angle ☐ 4 ☐ 10

Team C
www.teamcracing.net