TS2

1:10 SCALE 2WD ELECTRIC PRO RACING TRUCK

Team C

Notice

Thank you for purchasing this TS2 Competition Truck by Team C. This manual shows instructions and tips to built and maintain your TS2. Please take some time to read through to get familiar with the shown steps.
We continually improve our products, due to that, actual parts my be different to the illustrations. Please check our website for the latest versions manuals and tips before you start to built this model.

This manual is written in english language only. If you need a manual in your language please visit our website or contact your distributor!

Diese Anleitung wurde in englischer Sprache verfasst. Sollten sie eine Anleitung in ihrer Sprache benötigen, besuchen sie unsere website oder konaktieren sie ihren Vertriebsagenten.

Questo manuale è stato scritto in inglese. Se avete bisogno del manuale nella tua lingua, si prega di visitare il nostro sito web o contattate il proprio distributore.

Este manual está escrito en Inglés. Si necesita el manual en su idioma, por favor visite nuestro sitio web o contacte con su distribuidor.

Ce manuel est écrit en langue anglaise. Si vous avez besoin d'un manuel dans votre langue s'il vous plaît visitez notre site web ou contactez votre distributeur!

Deze handleiding is geschreven in het Engels taal beschikbaar. Als u een handleiding in uw eigen taal kunt u terecht op onze website of neem contact op met uw distributeur!

Generall Information

THIS IS NOT A TOY!
Not suitable for children under 14 years of age without adult supervision.

This is a high performance vehicle, for safety reason don’t run on public streets, in crowded areas, environmentally areas or near children or animals.

This model contains rotationg parts and parts which become hot during operation. Care must been taken to avoid damage or injuries.

This product may require some assembly and routine maintance.

This product is covered by warranty based on material defectives. Crash damage or maintenance failures are not covered under warranty.

Batteries should be used in good condition only, and need to be fully charged.

Nitro models should be driven outside of buildings only. Inhaling exhaust gases could cause health damage.

Keep chemicals stored out of the range of small children.

Make sure your model and equipment is in perfect condition before you use it, to ensure savety and fun while driving.

Transmitter Preparation

Power Switch

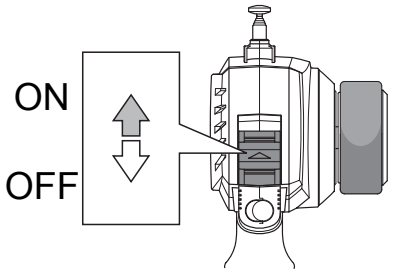

Antenna

Extend the antenna to the maximum
Length for best performance

27MHzTransmitter Crystal（TX）

Transmitter crystal(TX)

Receiver crystal(RX)

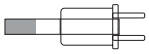

The crystal can be replaced to change frequencies.
Note : You must also change receiver crystals!
Do not use AM crystals

Battery Level Indicator

Good Batteries

Low Batteries(Light Blinks)

Reverse Switch
反向开关

! Servo Factory Settings

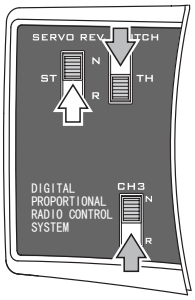

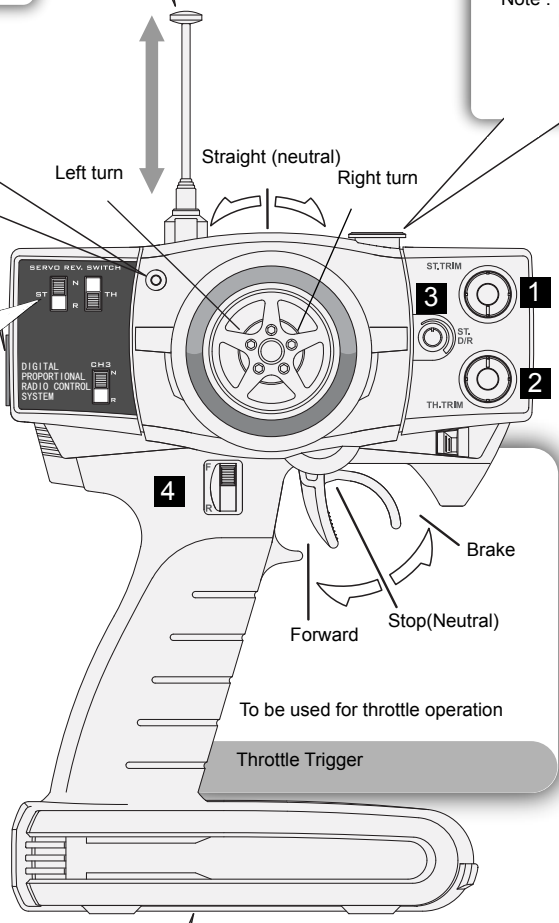

To be used for throttle operation

Throttle Trigger

1 Steering Trim

To be used for trimming the steering operation

2 Throttle Trim

To be used for trimming the throttle operation

4 3ch Switch

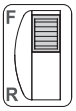

This switch is used for optional parts.

3 Steering Dual Rate

To be used to adjust steering servo throw

Transmitter Battery Installation

Open battery cover at the bottom of transmitter.
Install batteries. Follow the direction of batteries
designated in the inside of battery box.

Battery Cover

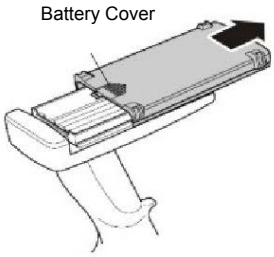

8X AA Alkaling Batteries

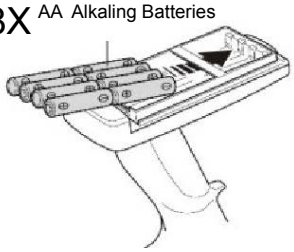

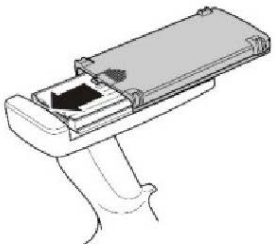

Transmitter Preparation

A new Ni-MH battery must be charged before it is used.Refer to the charger instruction manual for charging.

Set up the radio control system as indicated below.

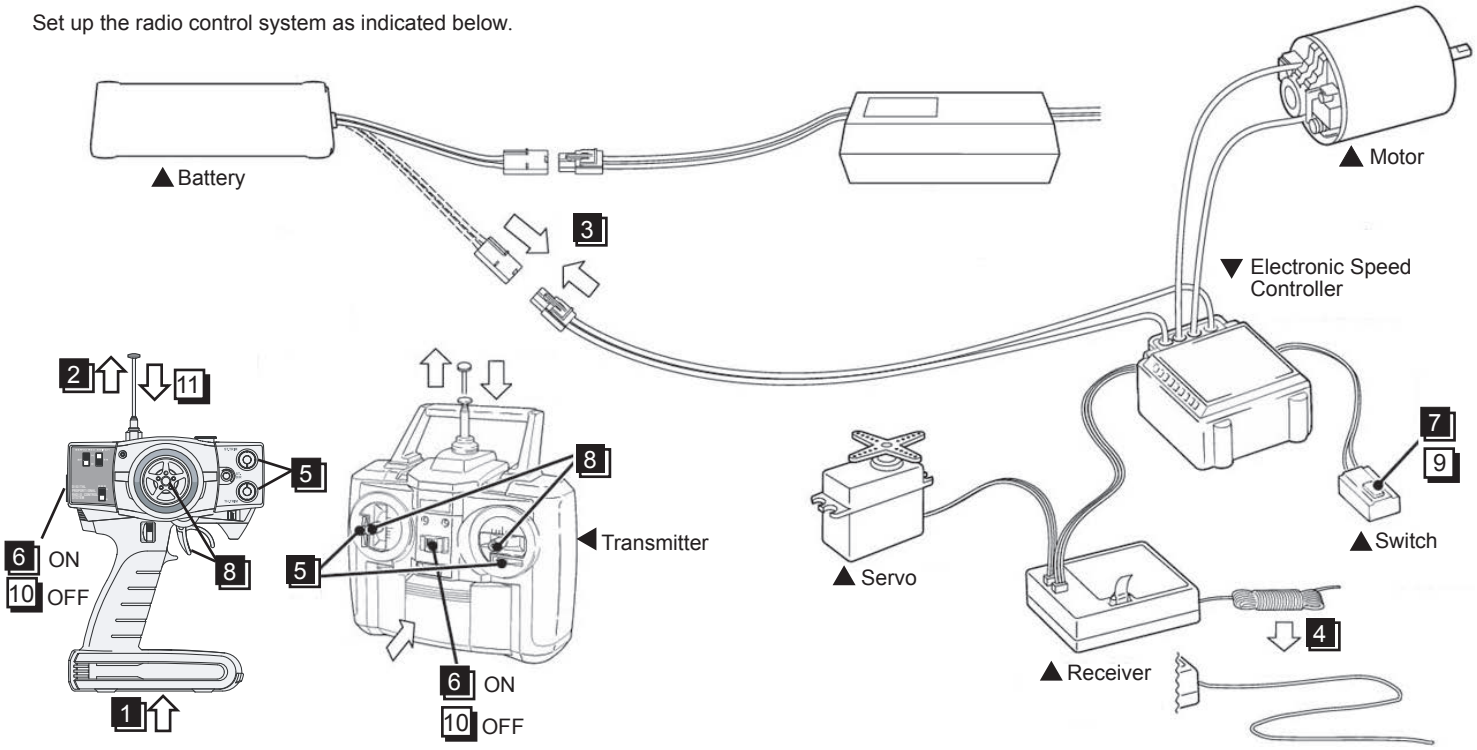

● Start

1. Install batteries.(Transmitter)
2. Extend the antenna.(Transmitter)
3. Connect the battery
4. Extend the antenna.(Reveiver)
5. Center the trims.
6. Switch on.(Transmitter)
7. Switch on.(Reveiver)
8. Make sure the servos are in command.

● Finish

9. Switch off.(Reveiver)
10. Switch off.(Transmitter)
11. Retract the antenna(Transmitter)

Tools required

● Needie Nose Pllers

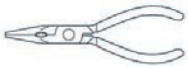

● Awl

● Grease

● Screw Cement

● ***H162***
Instant Glue

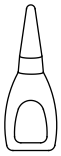

● Differential Grease

● Molybdenum Grease(Black)

● ***H154***
Body Reamer

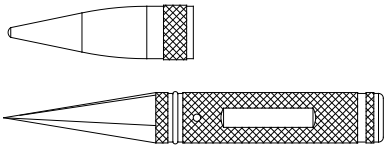

No need to pre-drill precise holes
(1mm to 15mm)can be drilled

● Wire Cutters

● ***H096***
ROUND CUTTER

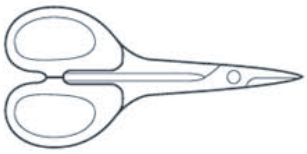

● Hex Wrench

● Hex Wrench

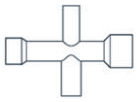

● Sharp Hobby knife

For trimming bodies!

1 Front Suspension

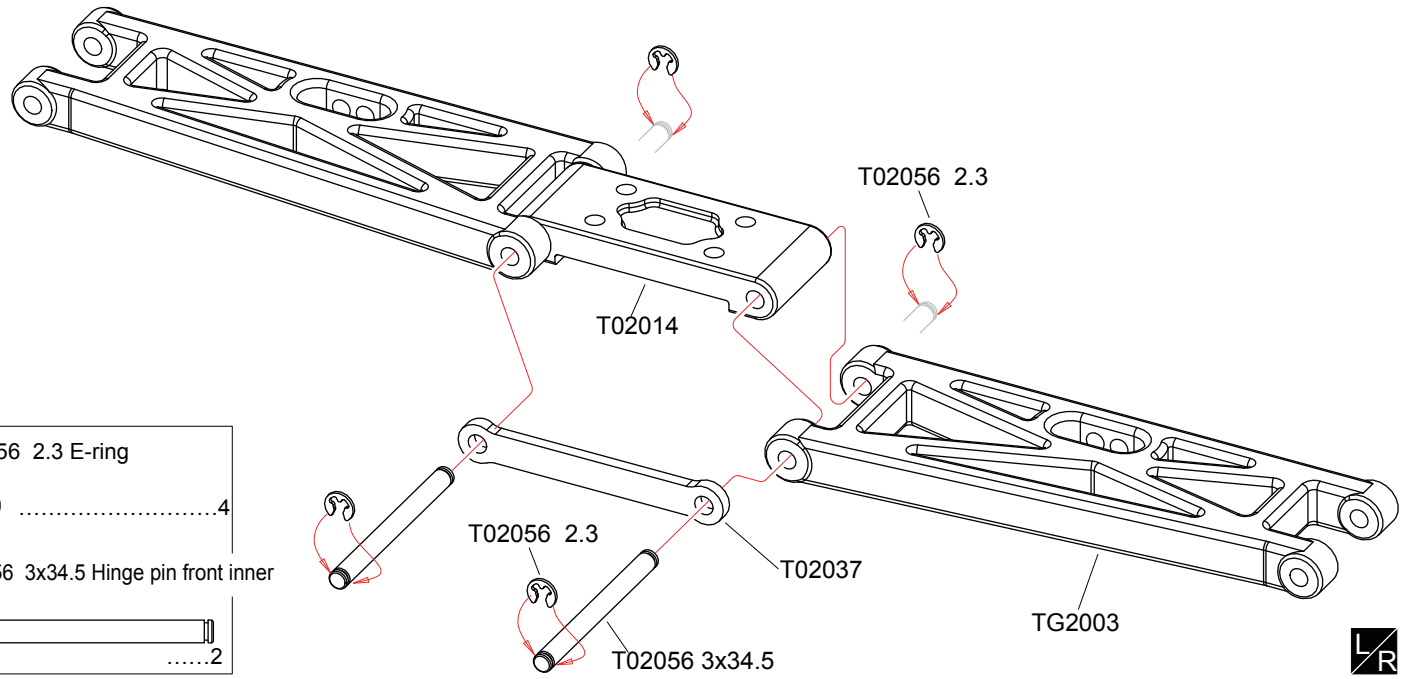

T02056 2.3 E-ring 4

T02056 3x34.5 Hinge pin front inner 2

2 Front Suspension

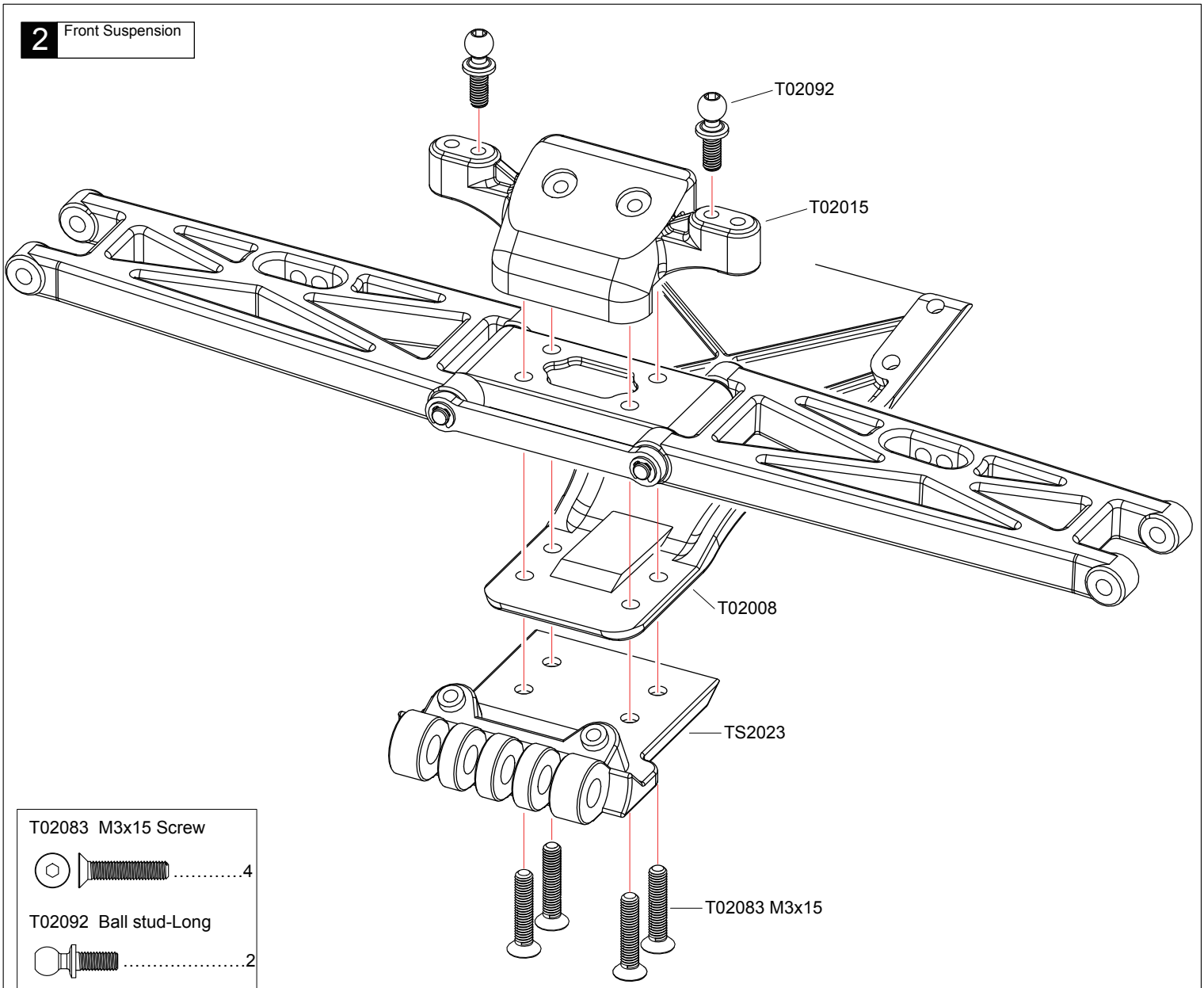

T02083 M3x15 Screw 4

T02092 Ball stud-Long 2

L/R Assemble Both Left And Right

3 Buffer

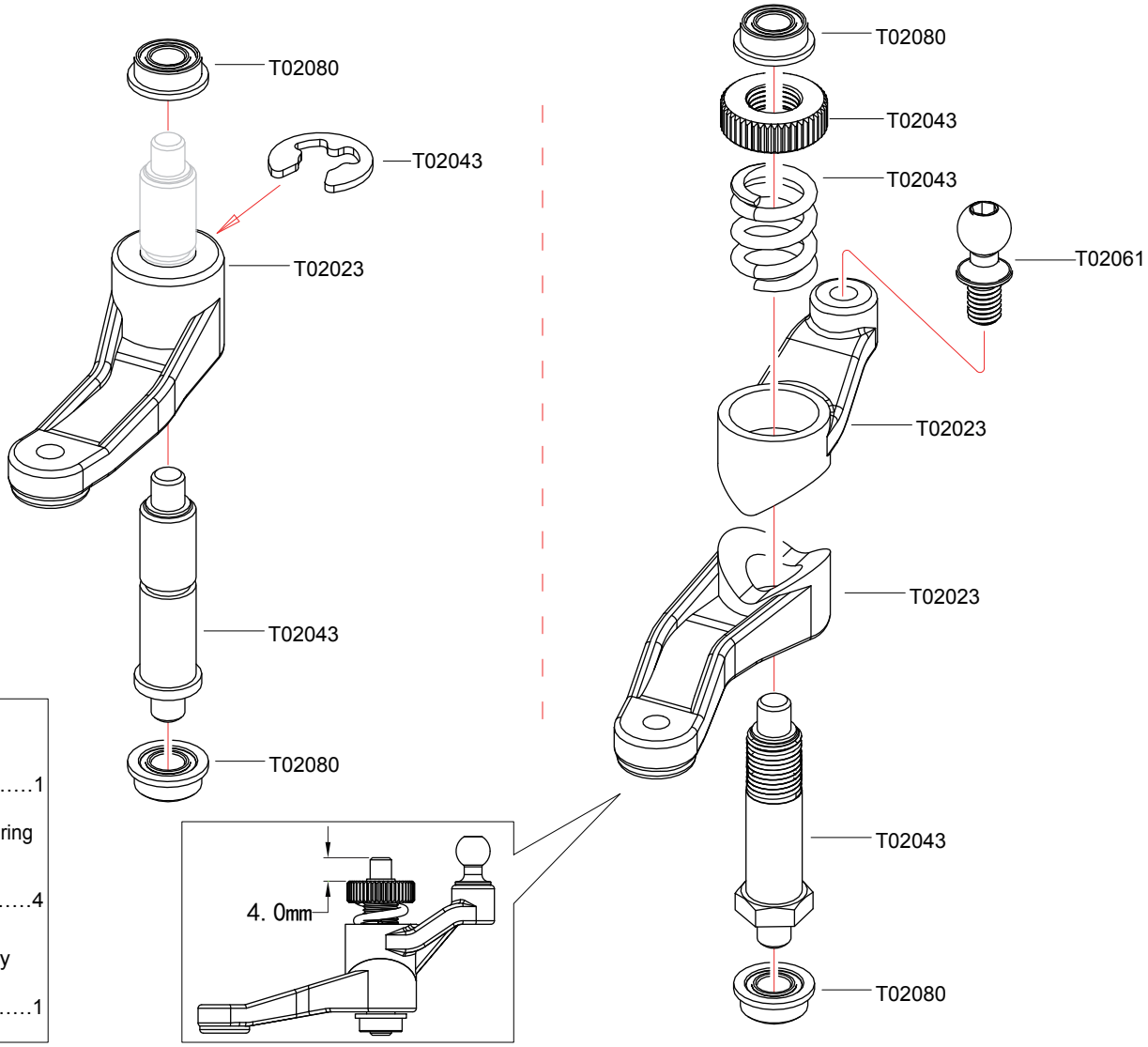

T02043 4.0 E-ring 1

T02080 3x6x2.5 Ball Bearing 4

T02061 Ball stud-Silvery 1

4 Buffer

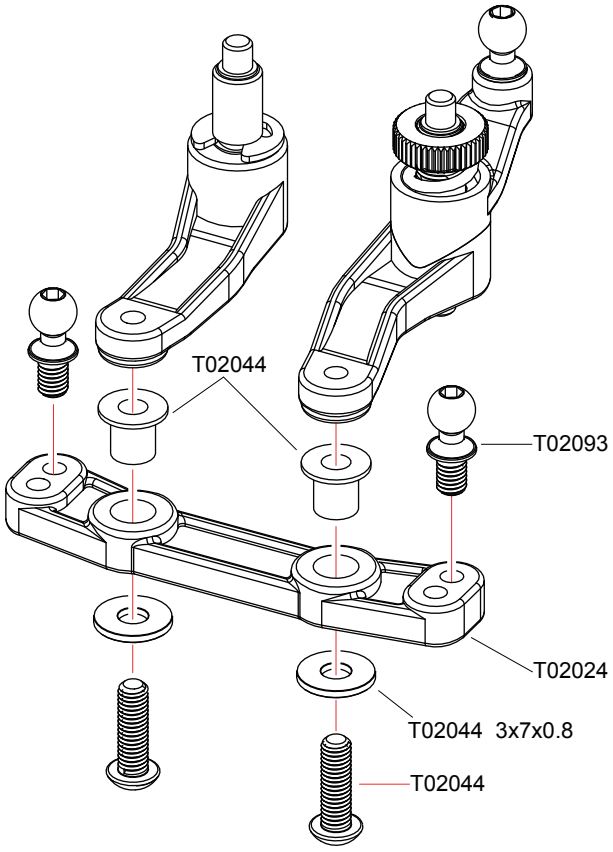

T02044 Block Carrier 2

T02044 M3x10 Screw 2

T02093 Ball stud-Short 2

T02044 3x7x0.8 Washer 2

5 Front Suspension

T02082 M3x10 Screw 2

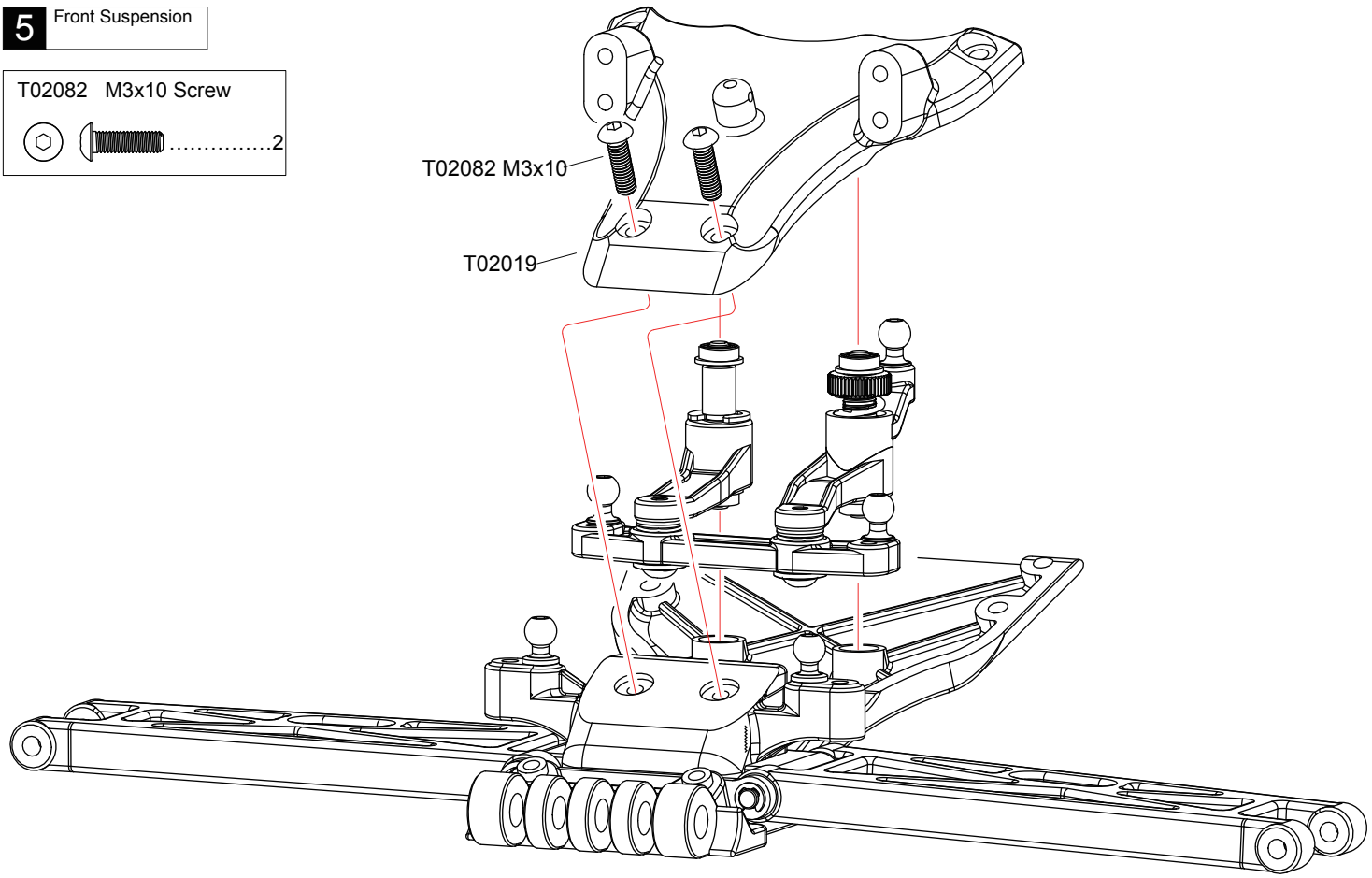

6 Front Suspension

T02054 2.3 E-ring 8

T02054 3x27.5 Hinge pin front outer 4

T02042 4.0 E-ring 2

T02100 5x10x4 all bearing 4

T02042 2x9.8 Shaft 2

T02093 Ball stud-Short 4

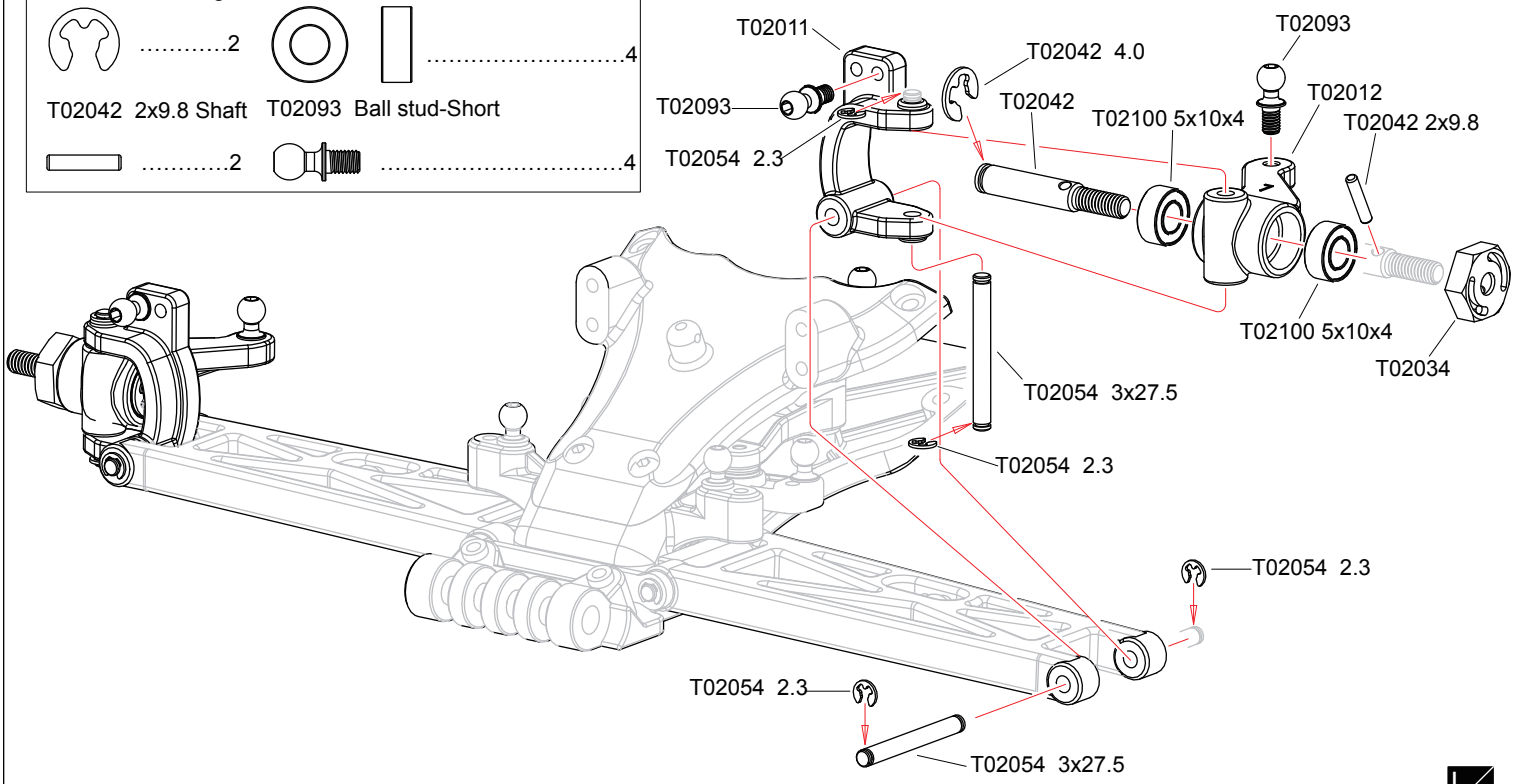

L/R Assemble Both Left And Right

7 Turnbuckle

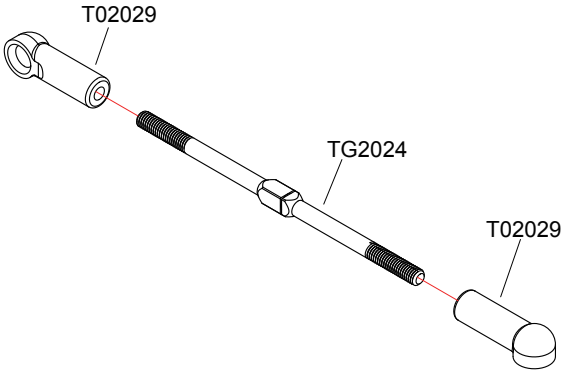

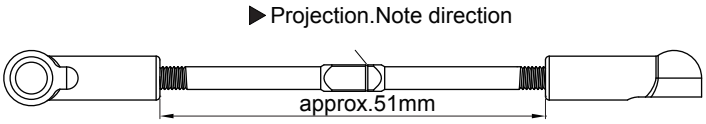

Front Upper-Left

x1 1:1

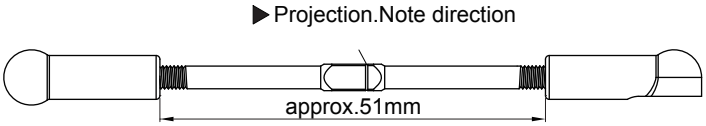

Front Upper-Right

x1 1:1

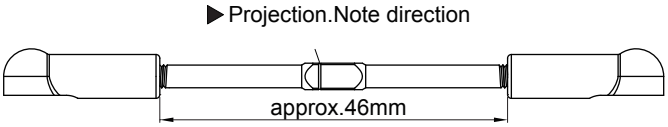

Steering Tip

x2 1:1

T02029 4.8mm Ball End-Long

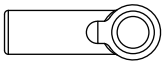

.....8

TG2024 3x68 Turnbuckle

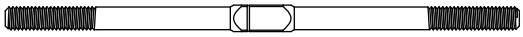

.....4

8 Front Suspension

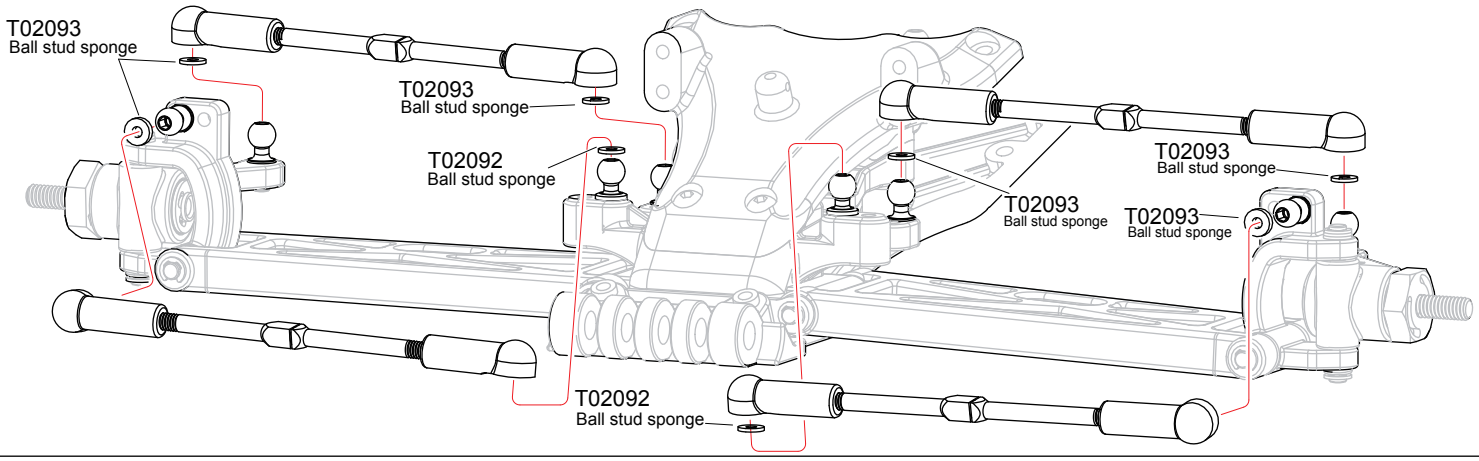

9 Front Suspension

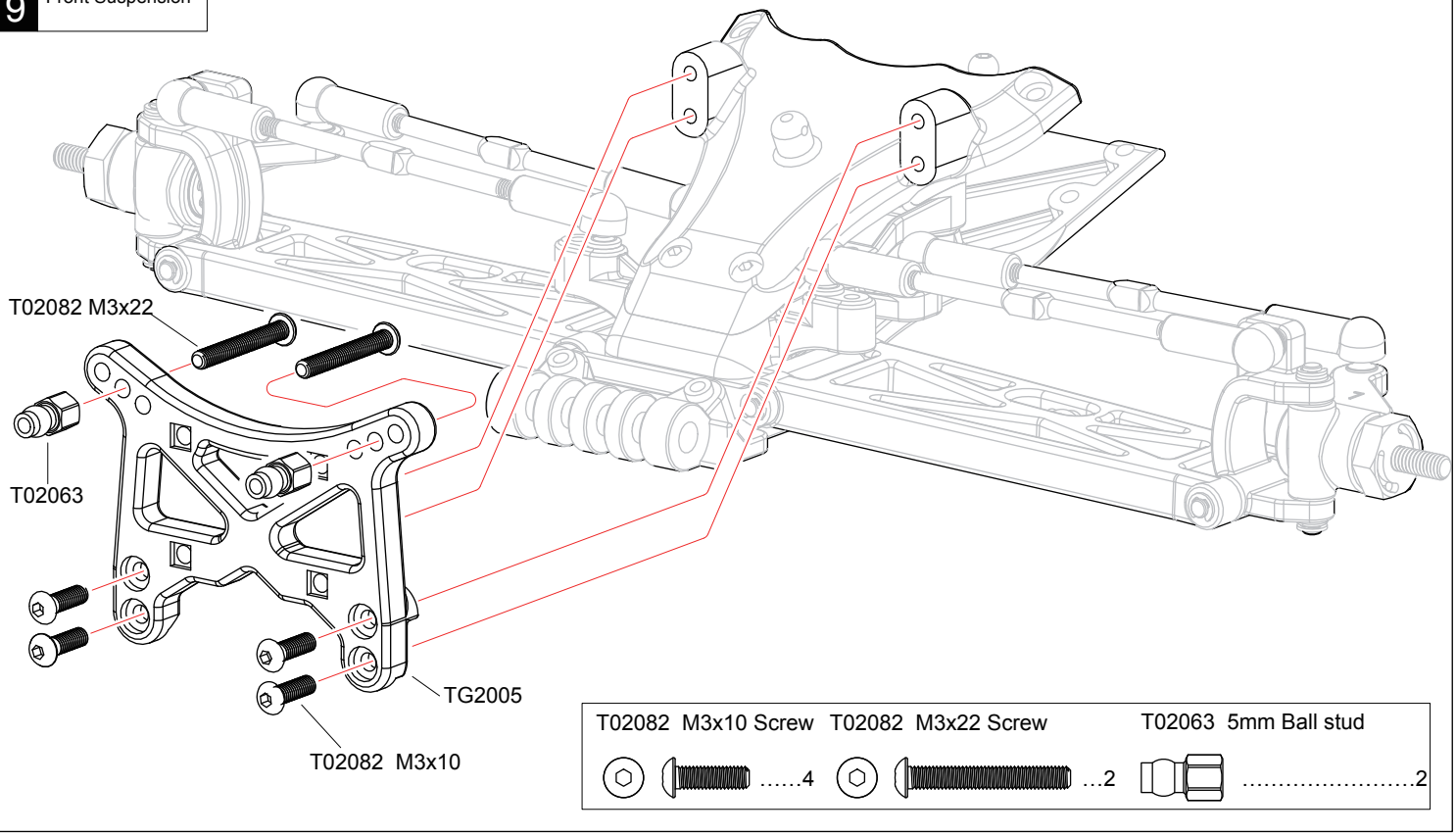

T02082 M3x10 Screw

.....4

T02082 M3x22 Screw

...2

T02063 5mm Ball stud

.....2

1:1 True-to -scale diagram

x1 Assemble as many times as specified

10 Front Suspension

TS2022/TS2024 M3x10 Screw ……4

TS2024 M3x12 Screw ……4

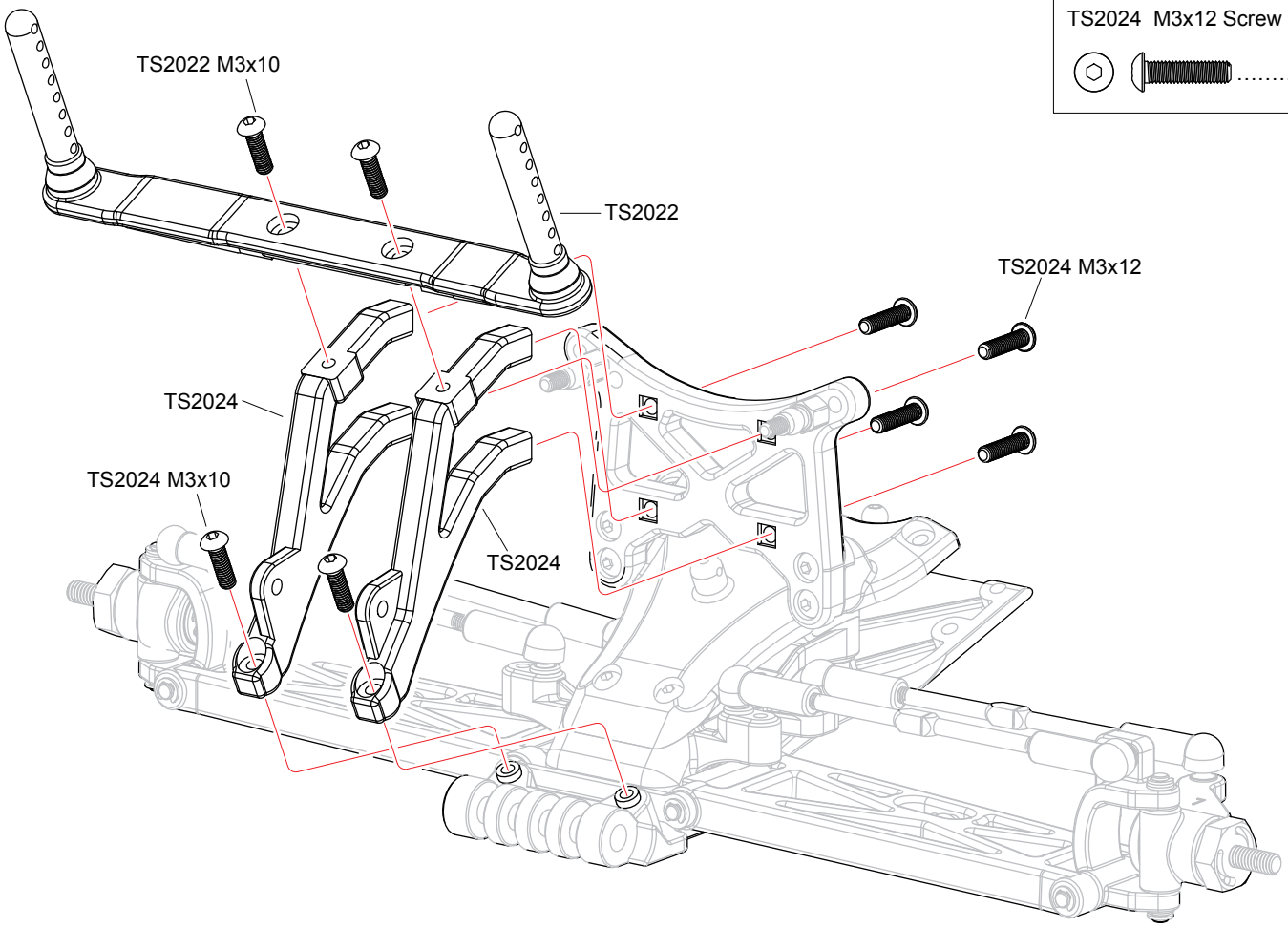

11 Front Suspension

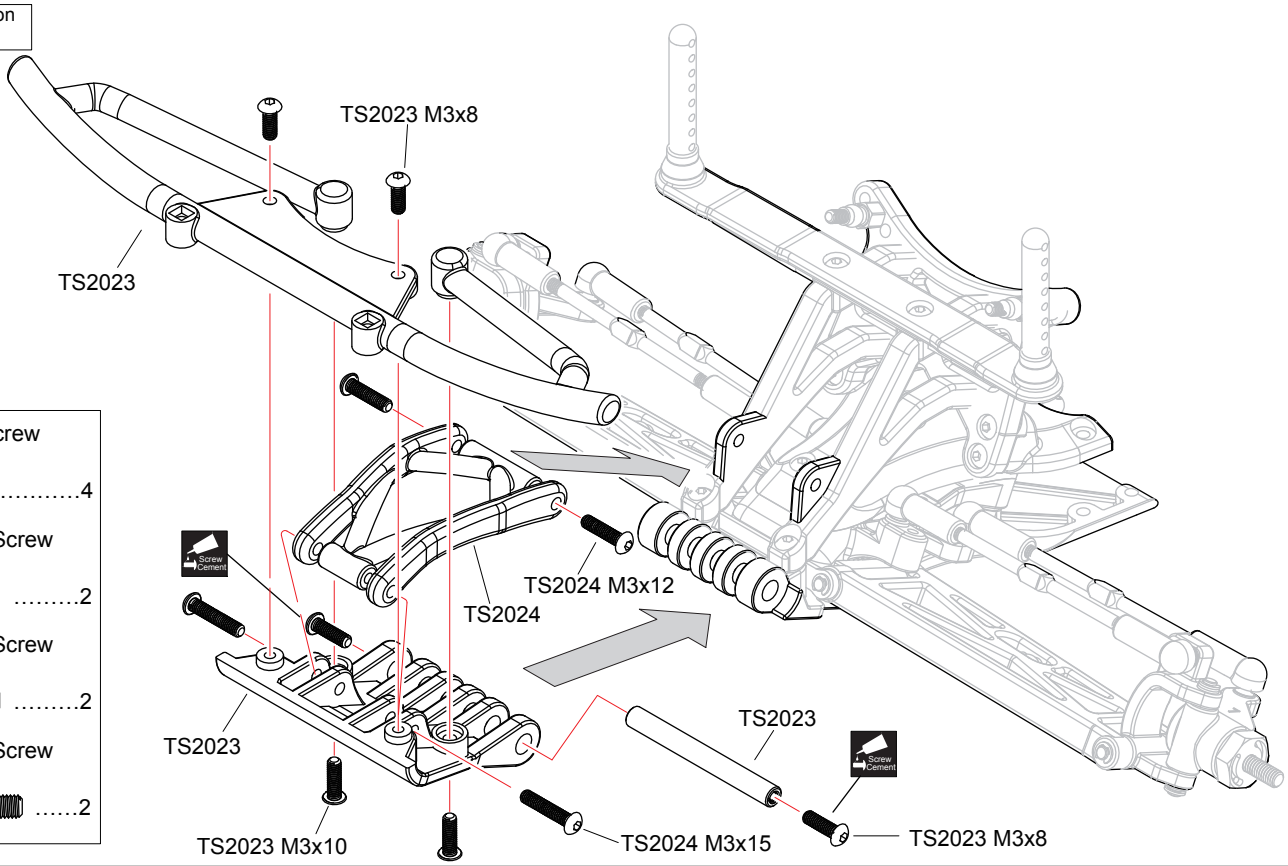

TS2023 M3x8 Screw ……4

TS2023 M3x10 Screw ……2

TS2024 M3x12 Screw ……2

TS2024 M3x15 Screw ……2

Apply threadlocker(screw cement)

12 Front Suspension

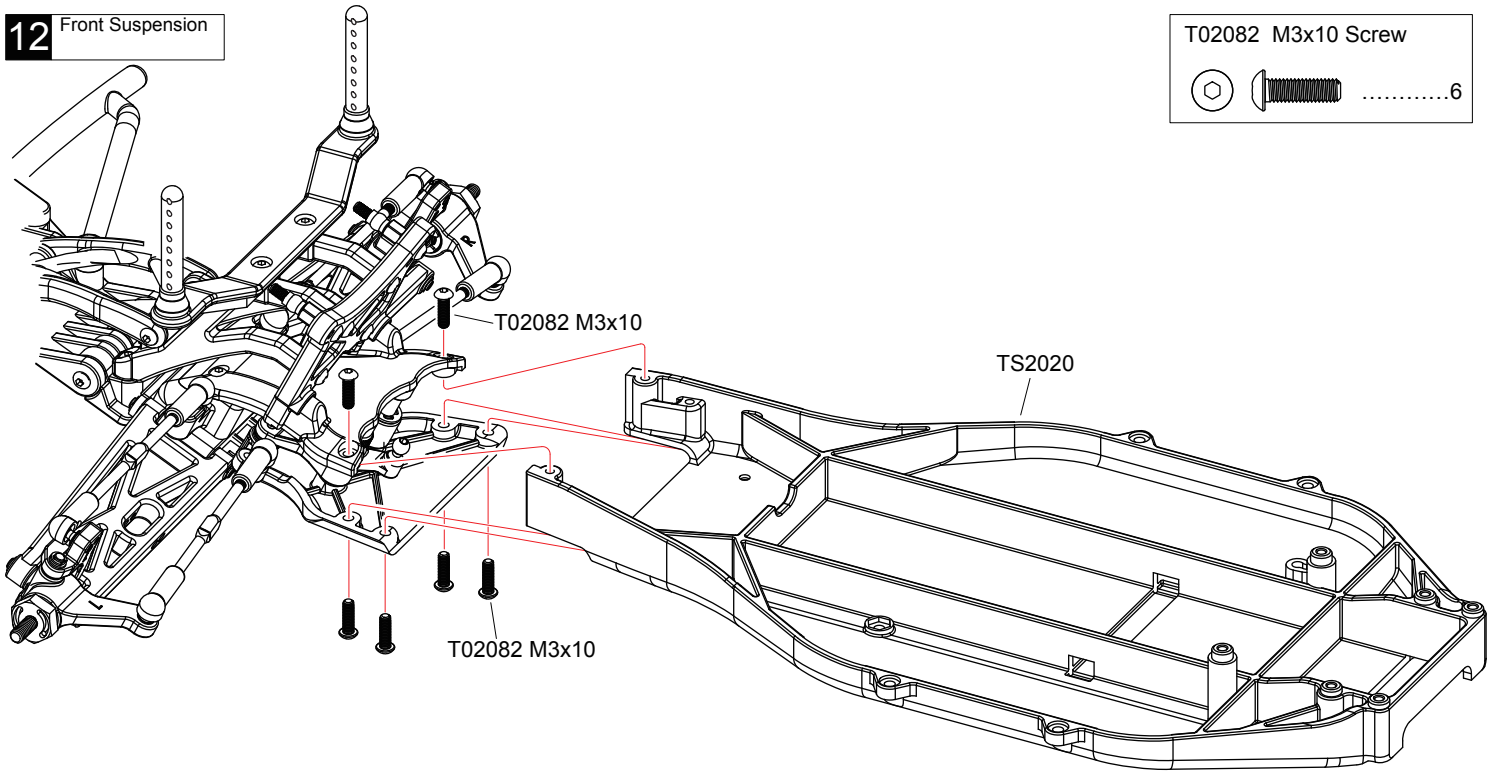

T02082 M3x10 Screw 6

13 Rear Suspension

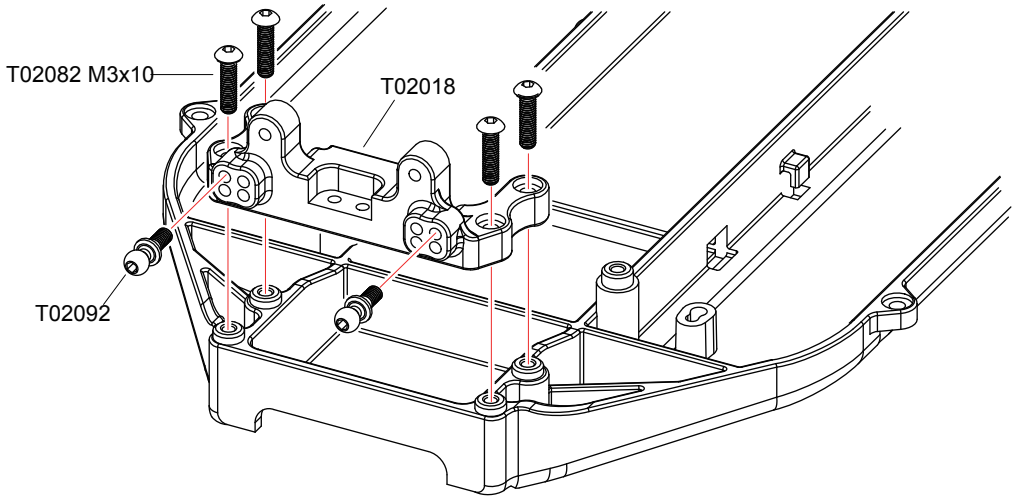

T02082 M3x10 Screw 4

T02092 Ball stud-Long 2

14 Rear Suspension 后悬吊系统

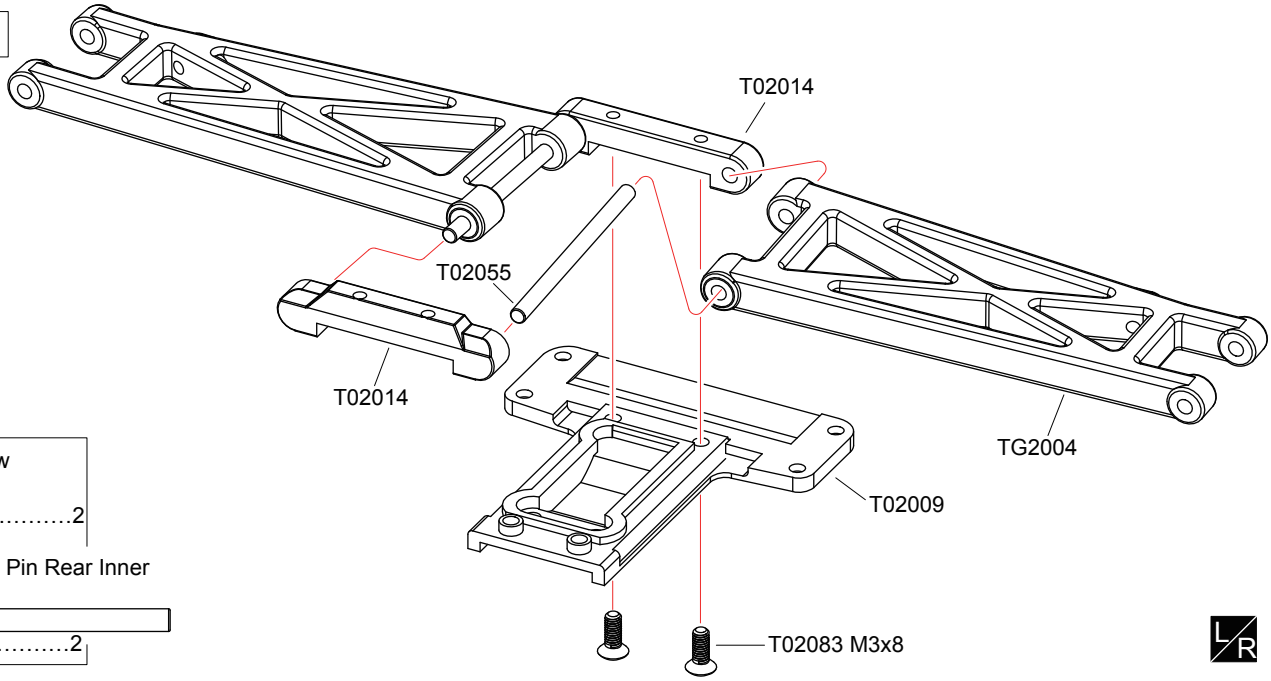

T02083 M3x8 Screw 2

T02055 3x48 Hinge Pin Rear Inner 2

L/R

L/R Assemble Both Left And Right

15 Rear Suspension

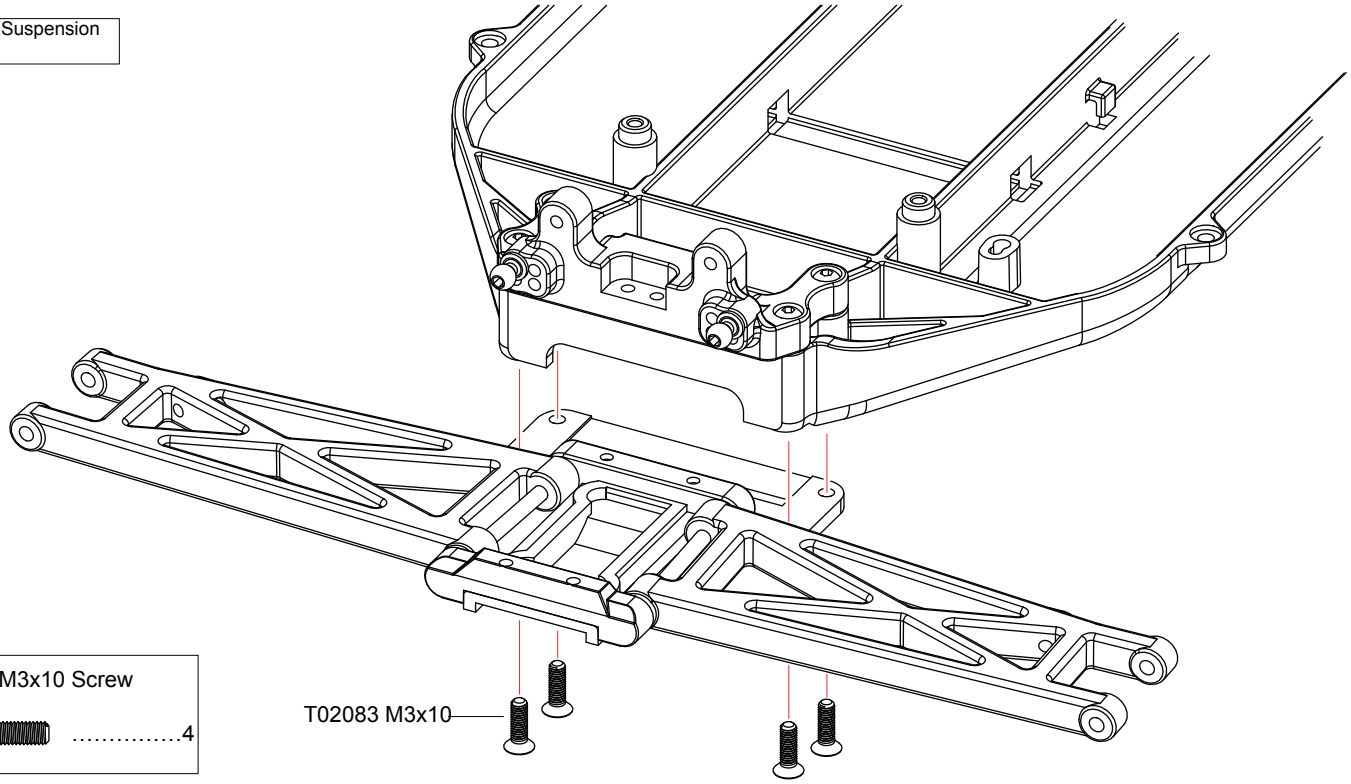

T02083 M3x10 Screw 4

16 Differential

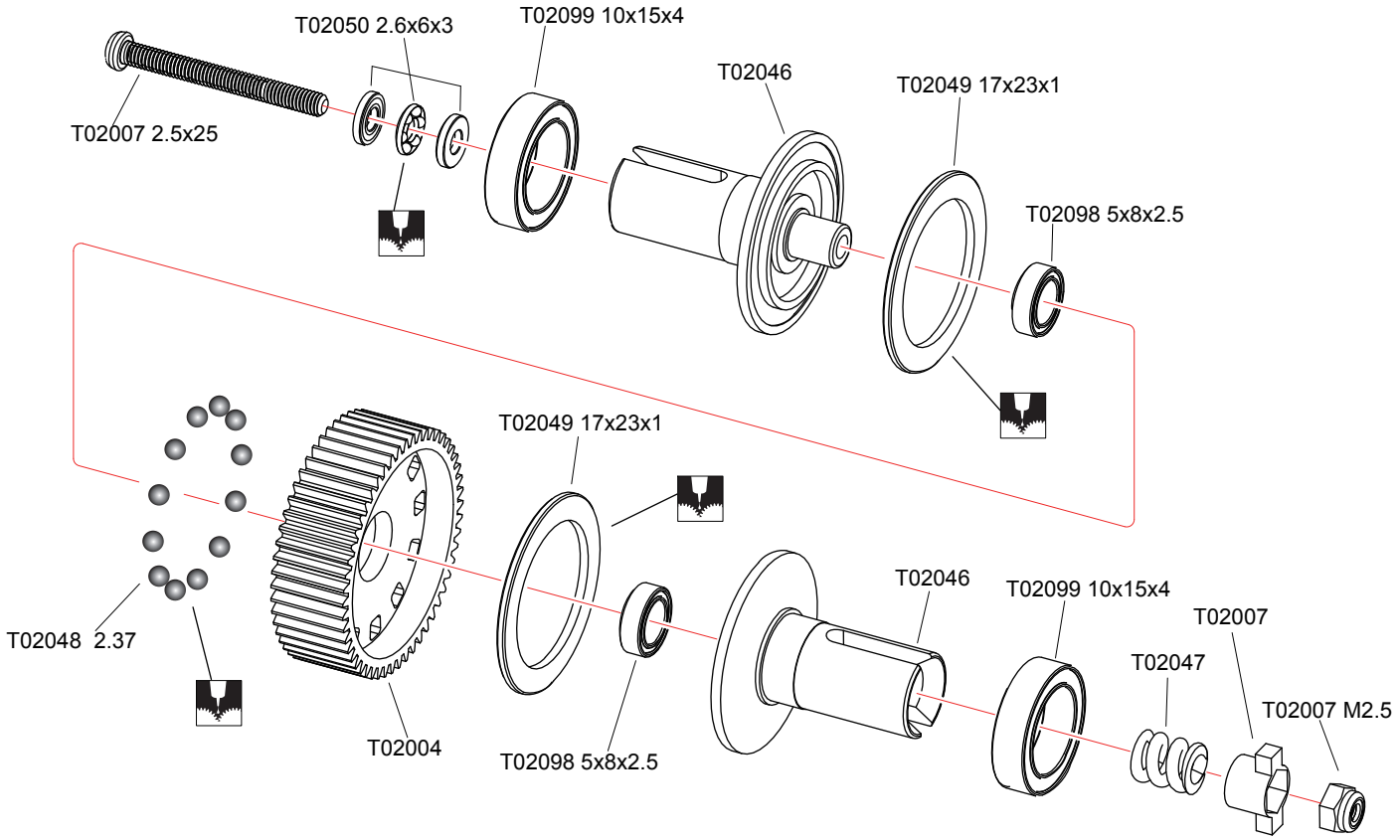

T02049 17x23x1 Washer 2

T02007 M2.5 Nylon Nut 1

T02048 2.37mm Ball
2. 37钢珠 12

T02098 5x8x2.5 ball bearing 2

T02007 M2.5x25 Screw ...1

T02099 10x15x4 ball bearing 2

Apply Grease

17 Transmission

T02100 5x10x4 Ball bearing 4

T02051 5x16.8 Idler gear shaft 1

T02041 5x8x6.7 Top shaft spacer 1

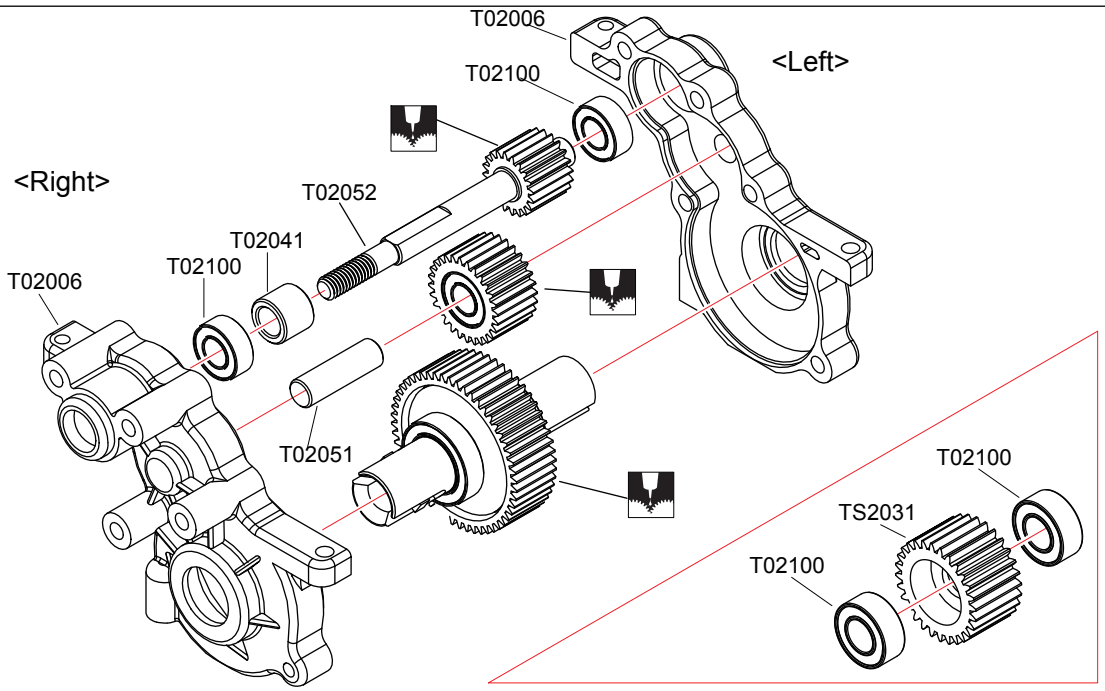

18 Motor Mount

T02082 M3x12 Screw 1

T02082 M3x25 Screw 4

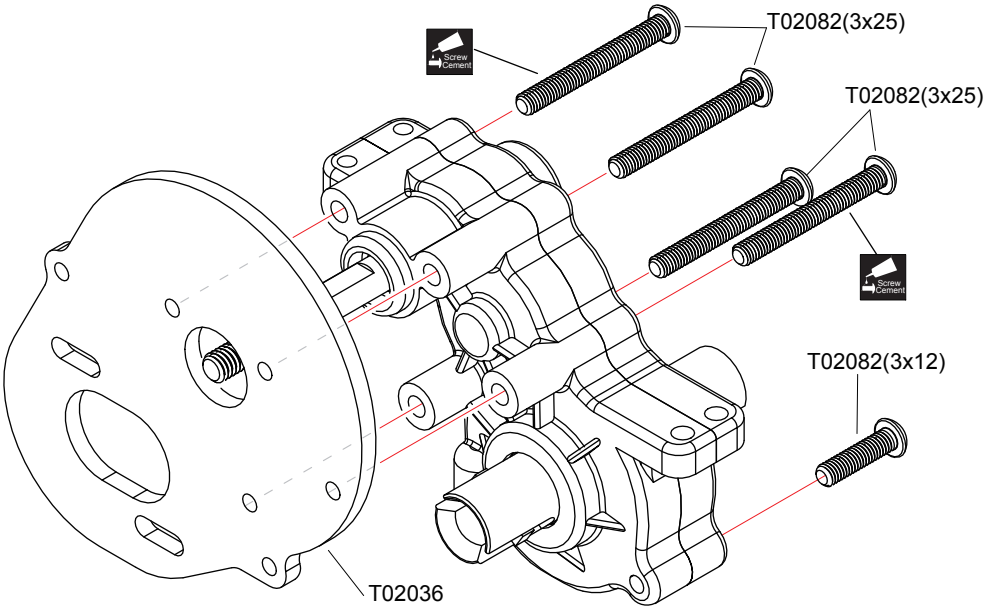

19 Spur Gear

T02084 M4 Flanged Nylon Nut 1

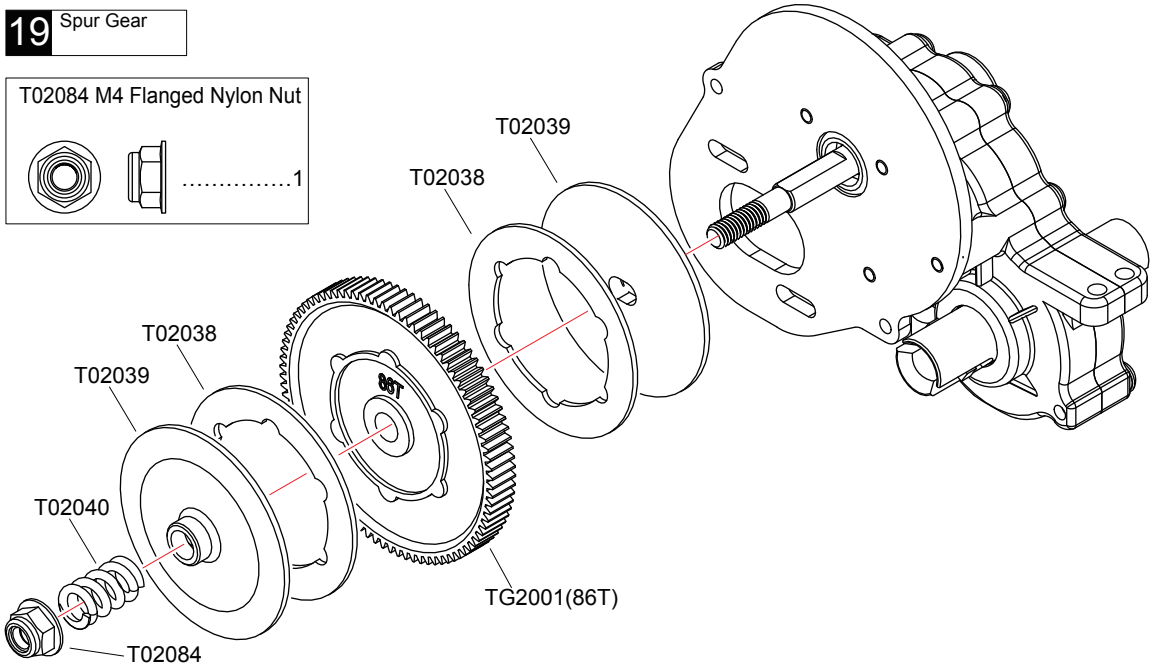

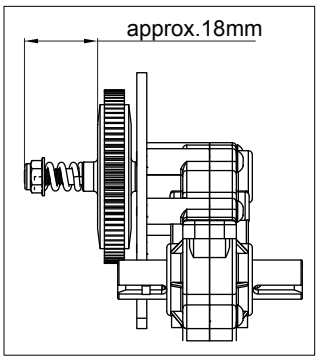

Apply Grease Apply threadlocker(screw cement)

20 Motor

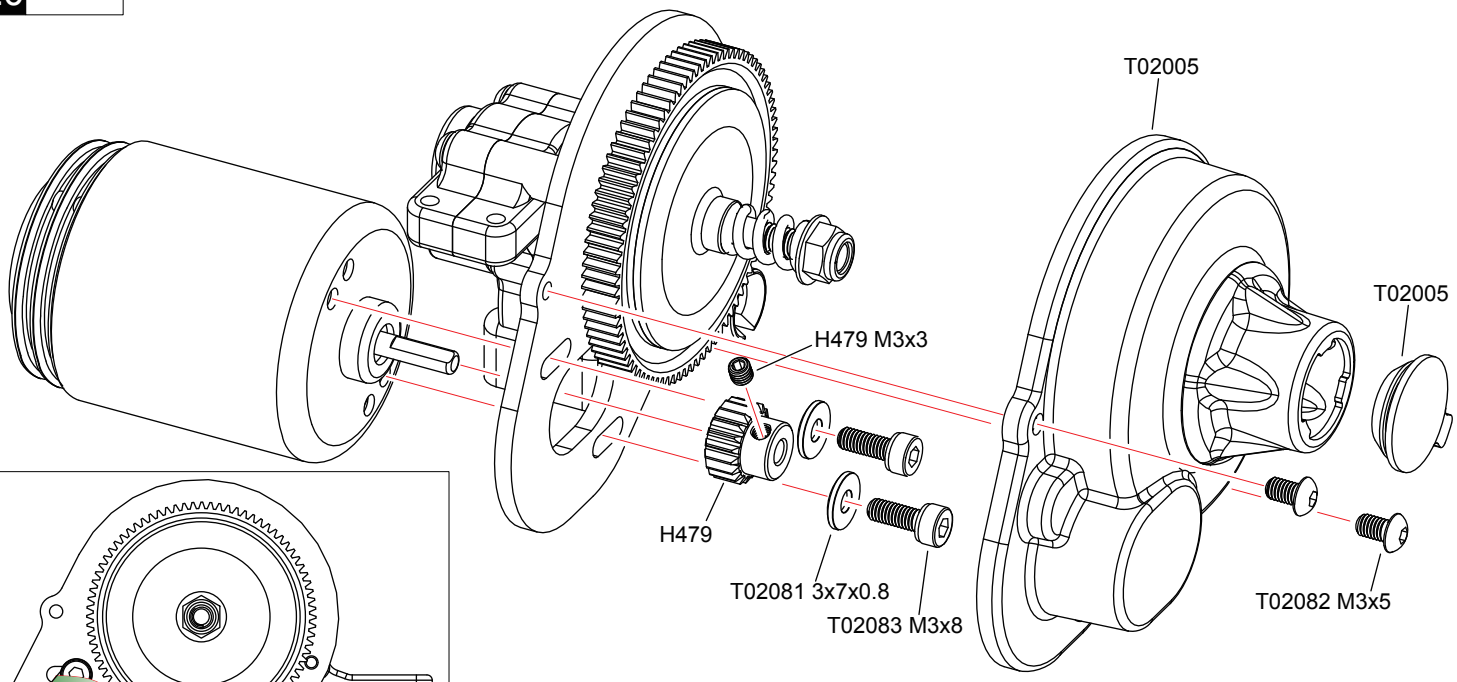

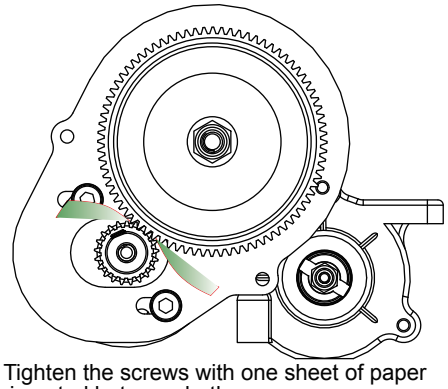

Tighten the screws with one sheet of paper inserted between both gears.

T02083 M3x8 Screw	T02082 M3x5 Screw	T02081 3x7x0.8 Washer	H479 M3x3 Screw
.....2	2	2	1

21 Rear Suspension

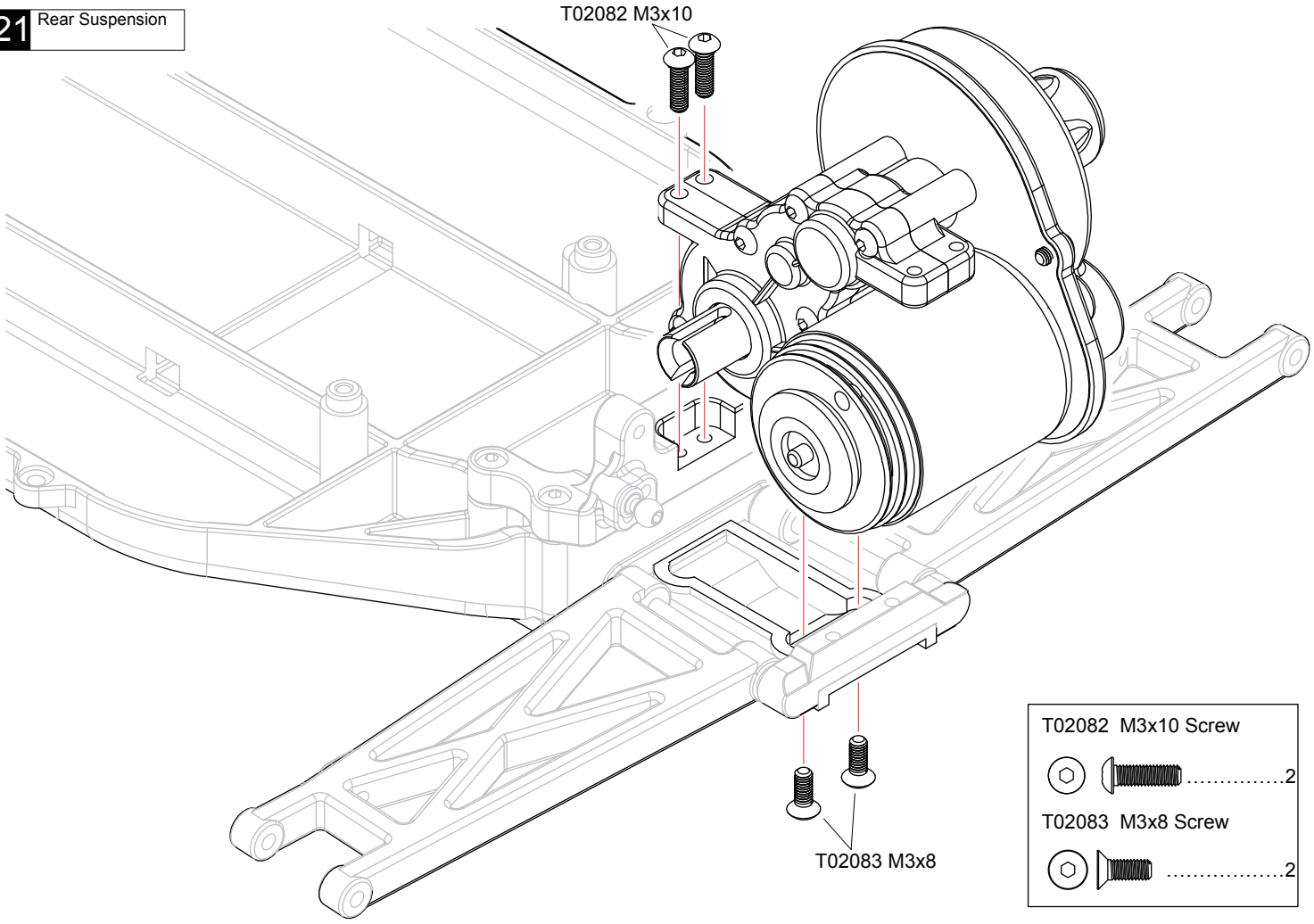

T02082 M3x10 Screw	
	2
T02083 M3x8 Screw	
	2

22 Rear Suspension

T02082 M3x22

T02063

T02082 M3x10

T02082 M3x22

TS2025 M3x10

T02082 M3x10

TS2025

T02026

T02083 M3x8

T02083 M3x8 Screw 2

TS2025/T02082 M3x10 Screw 6

T02082 M3x22 Screw ...2

T02063 5mm Plastic Ball stud 2

23 Rear Suspension

<Left>

<Right>

TG2012

T02013

T02093

T02100

T02100

T02034

T02034

T02093 Ball stud-Short 2

T02034 2x9.8 Shaft 2

T02100 5x10x4 Ball Bearing 4

L/R

L/R Assemble Both Left And Right

24 Rear Suspension

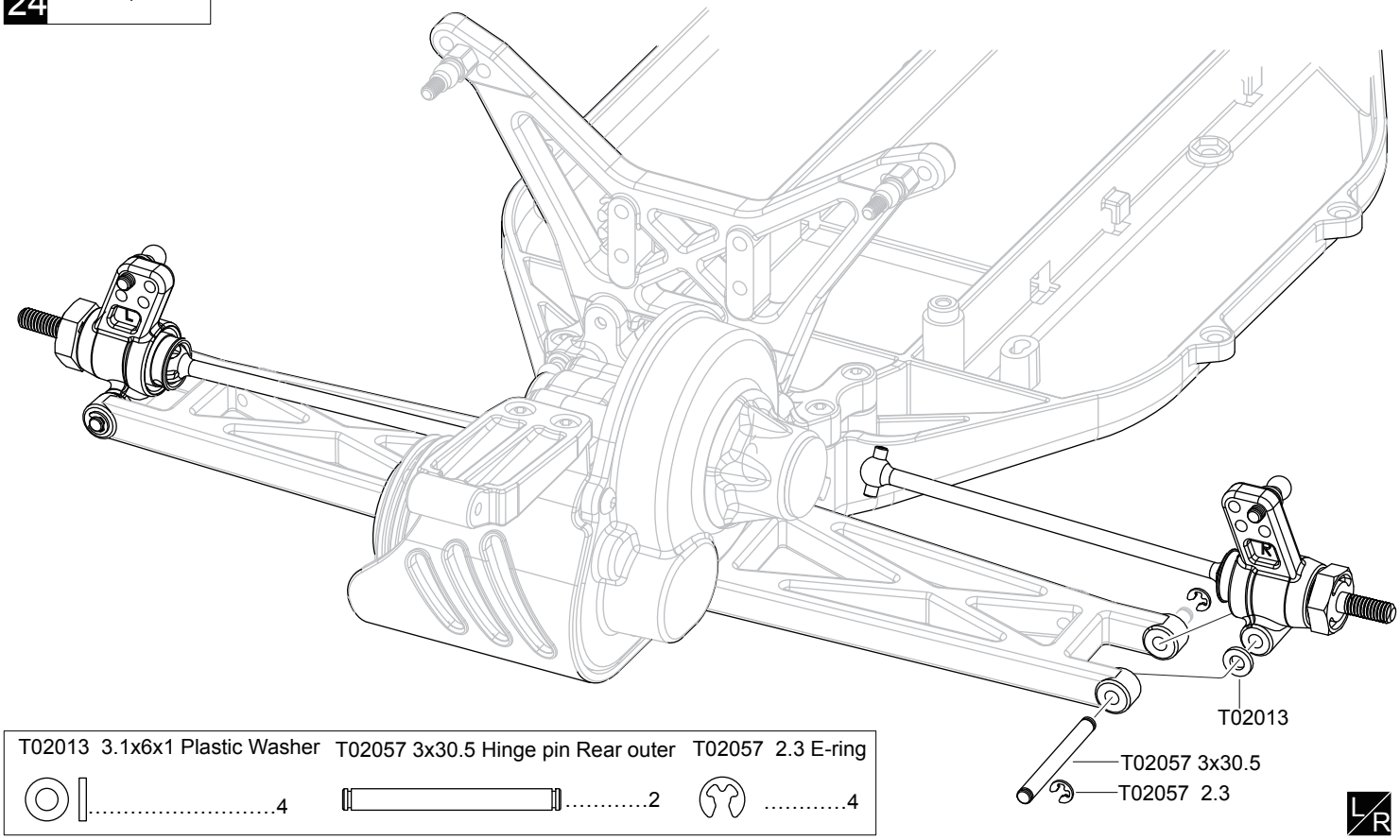

T02013 3.1x6x1 Plastic Washer	T02057 3x30.5 Hinge pin Rear outer	T02057 2.3 E-ring
.....4	2	4

25 Rear Suspension

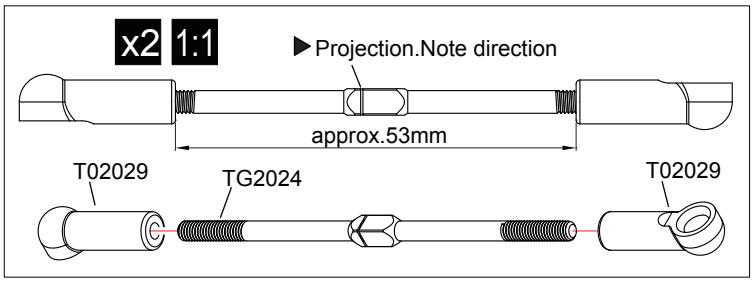

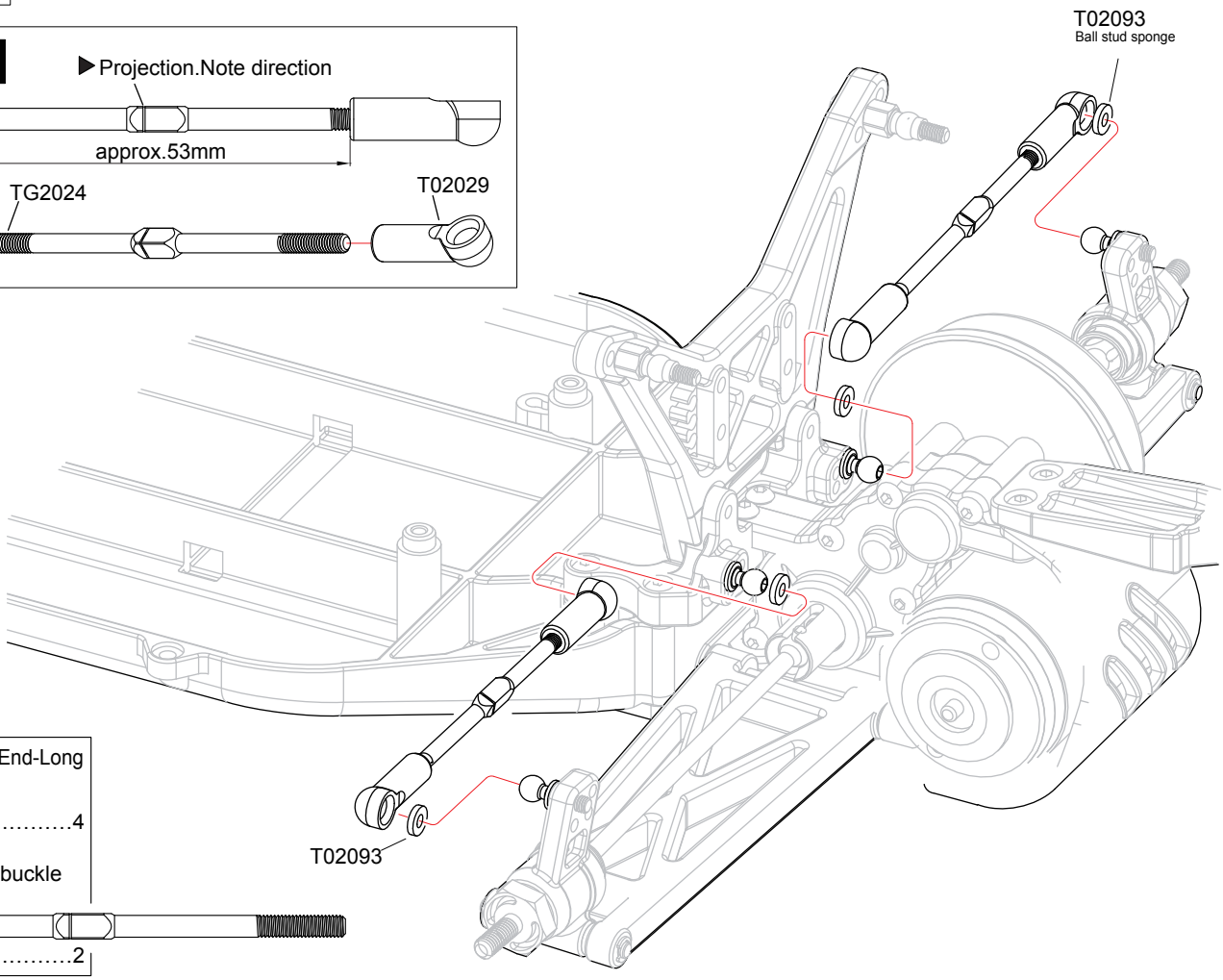

T02029 4.8mm Ball End-Long

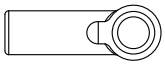

.....4

TG2024 3x72 Turnbuckle

.....2

L/R Assemble Both Left And Right

26 Shock Absorber

TG2013 / TG2014 2.3 E-ring 8

T02096 Shock Piston 4

T02097 2.8x1.9 O-ring 8

T02097 3.1x1 Plastic Washer 4

TG2025/TG2026 8x1 O-ring 4

T02031 5.8 Ball End 4

T02062 5.8x6 Ball stud 4

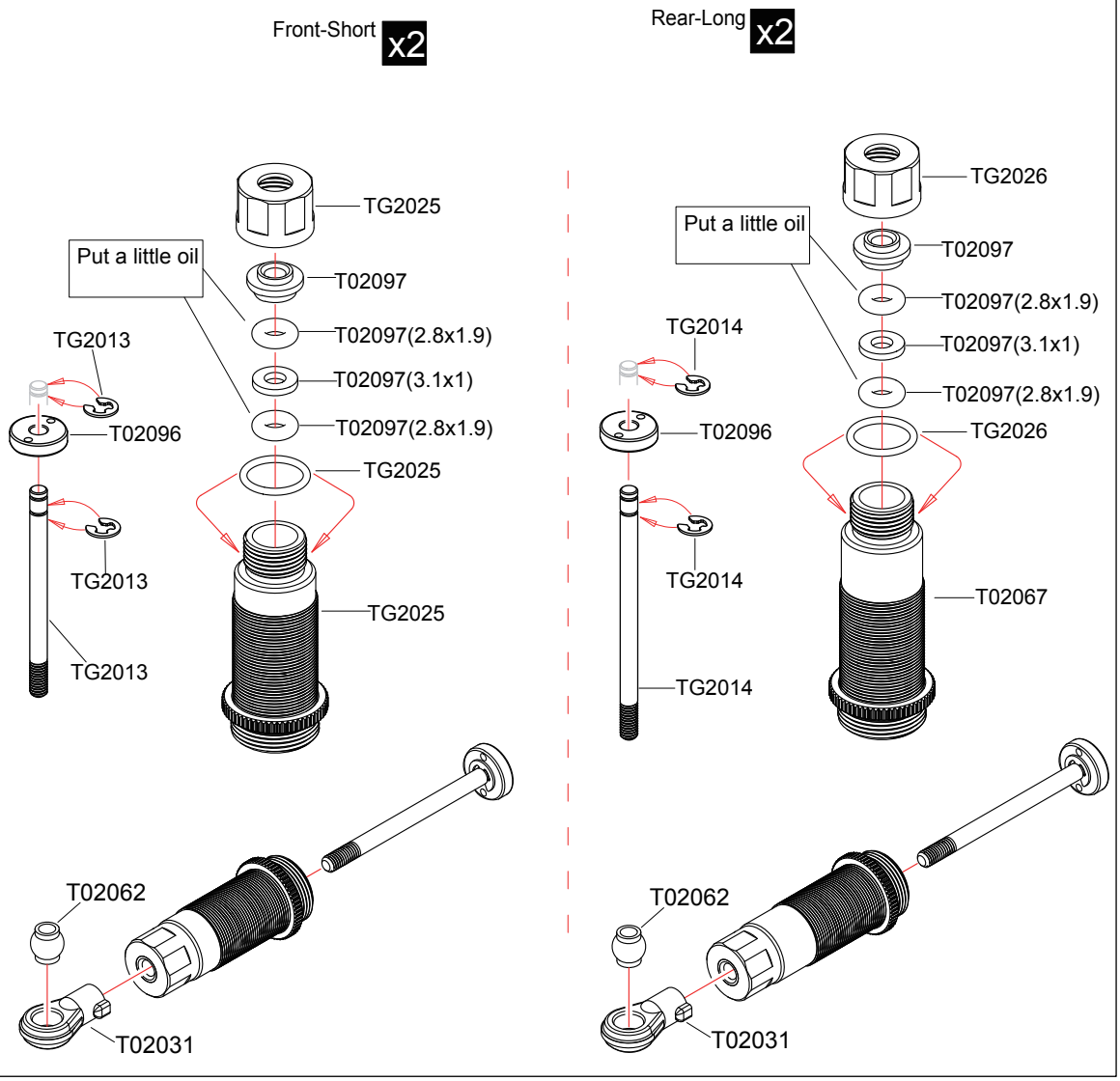

27 Shock Absorber

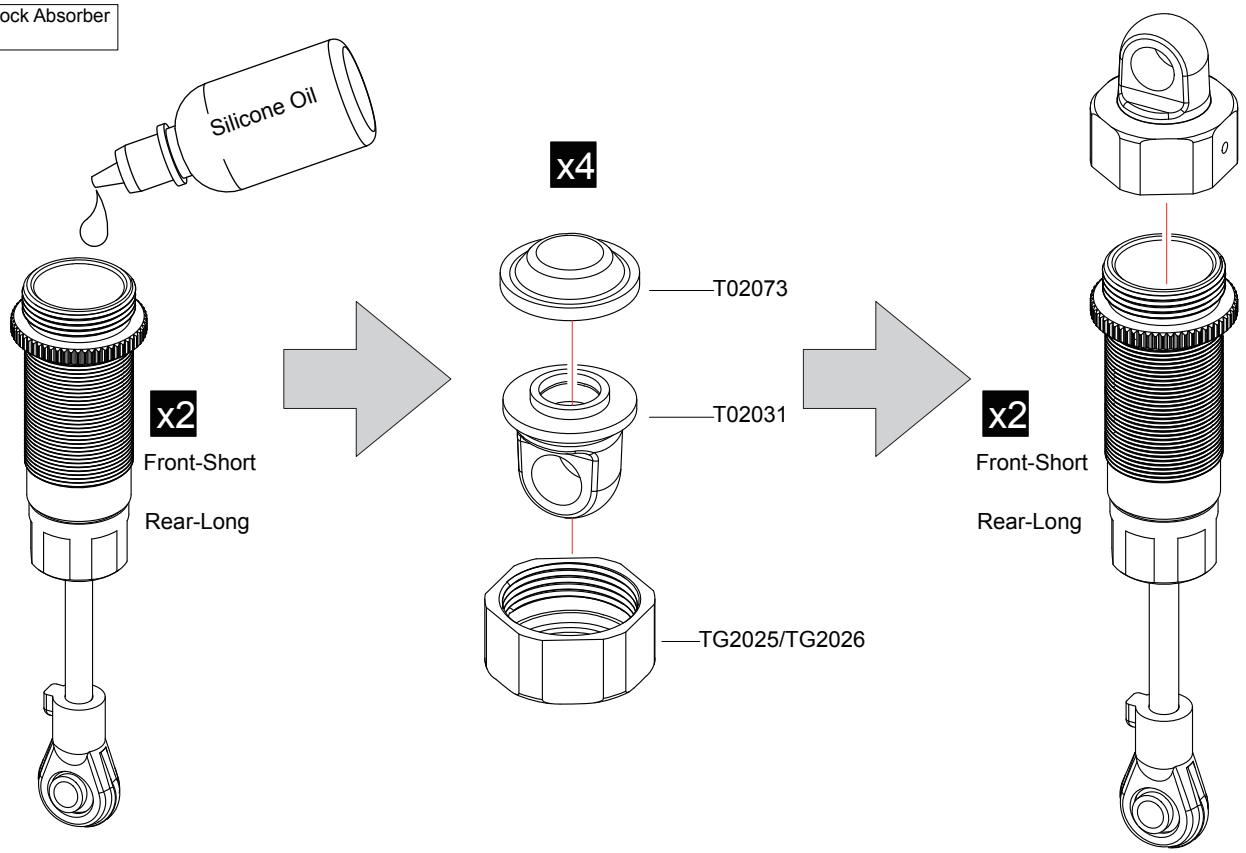

x2 Assemble as many times as specified

28 Shock Absorber

Front-Short x2

TG2025/TG2026

x4

for adjusting the spring tension

Compress the spring and install

T02031

TG2017

T02031

TG2018

Rear-Long x2

TG2025/TG2026 12x1 O-ring

.....4

29 Front Suspension

T02084 M3 Nylon Nut

.....2

T02082 M3x15 Screw

.....2

T02084 M3

T02082 M3x15

L/R

x2 Assemble as many times as specified

L/R Assemble Both Left And Right

30 Rear Suspension

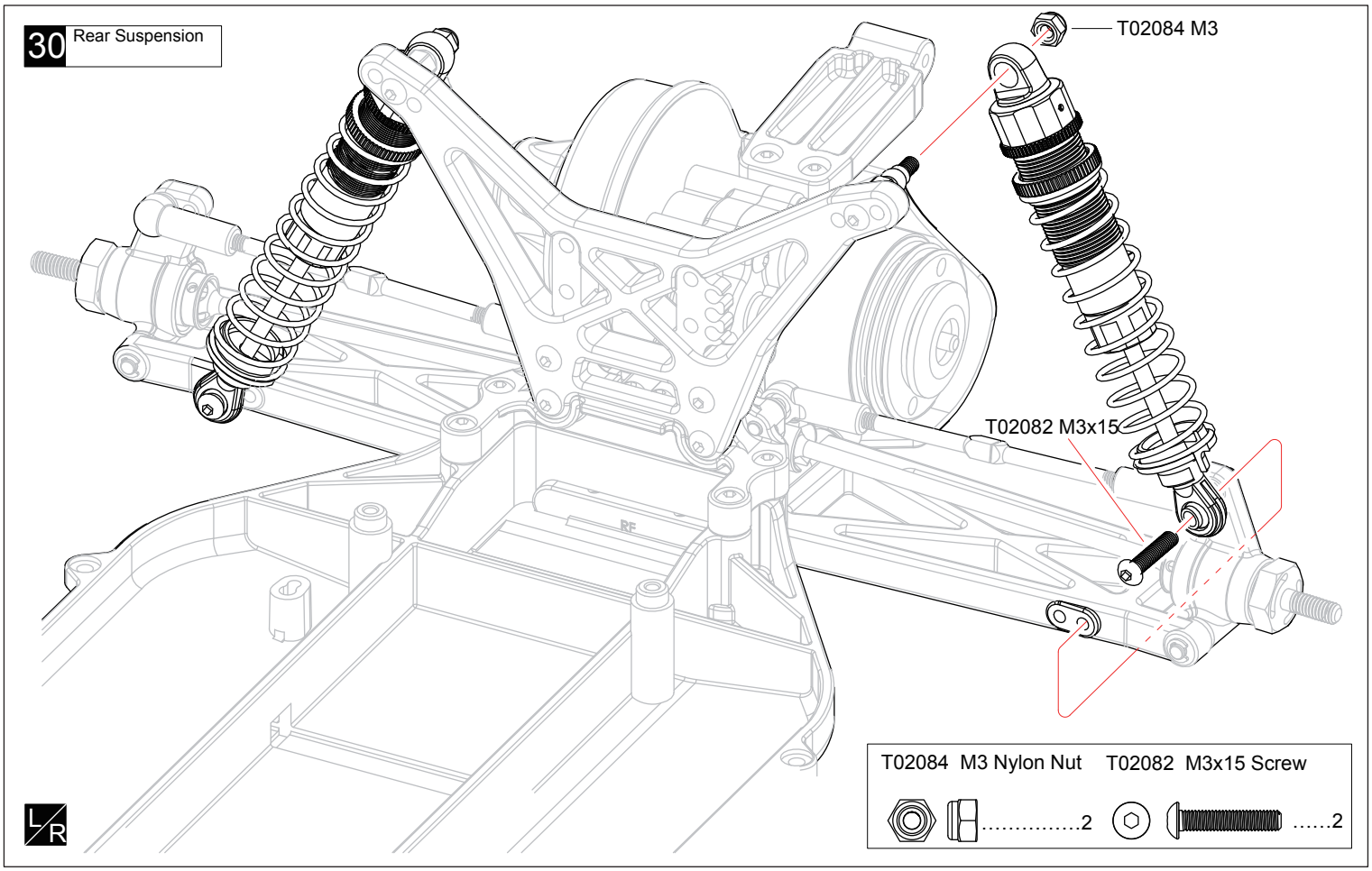

31 Rear Suspension

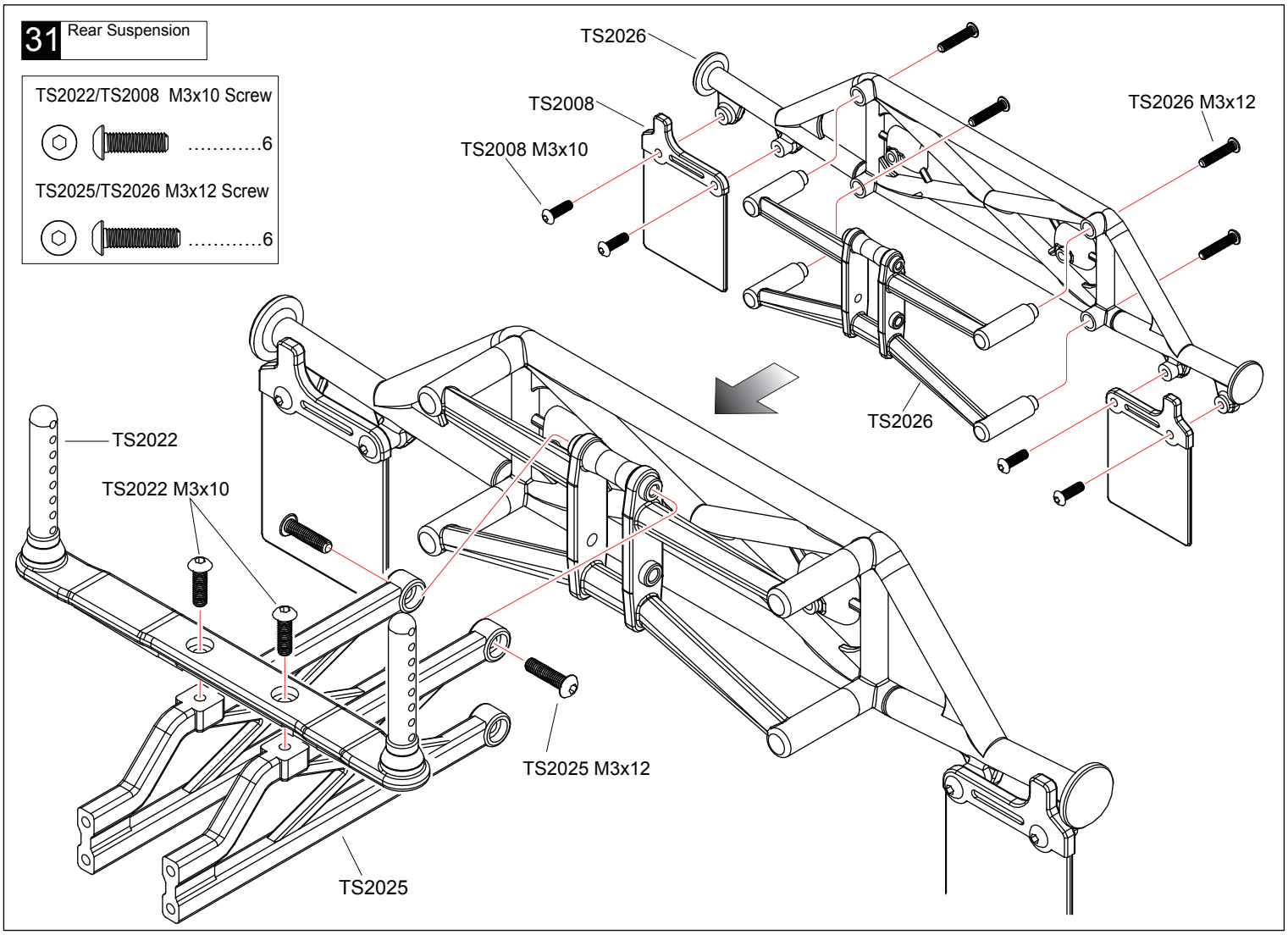

Assemble Both Left And Right

32 Rear Suspension

TS2025 M3x12

TS2025 M3x10

TS2025 M3x10 Screw 4

TS2025 M3x12 Screw 2

33 Steering Servo

Select for your servo

Steering Servo-F(25T) Steering Servo-H(24T) Steering Servo-S(23T)

T02030

T02081

X

T02061

T02028

Sanwa servo

T02028

T02035

SANWA

X

T02027
Steering Servo-F(25T)

T02082

T02082(2.6x8)

T02030 4.8 Ball End-Short 2

T02081 3x7x0.8 Washer 4

T02061 Ball stud - silvery 1

T02035 1.5 Servo spacer 2

T02030 M3x10 Screw 1

T02082 M3x8 Screw 4

T02082 M2.6x8 Screw 1

X Must be purchased separately

34 Steering Servo

T02083 M3x8 Screw 2

T02083 M3x8

35 Receiver/Electronic speed controller

TS2020 M3x5 Screw 1

Receiver

X

T02087

TS2020

X

Electronic speed controller

T02087
Double-sided Tape

X Must be purchased separately

36 Body Mount

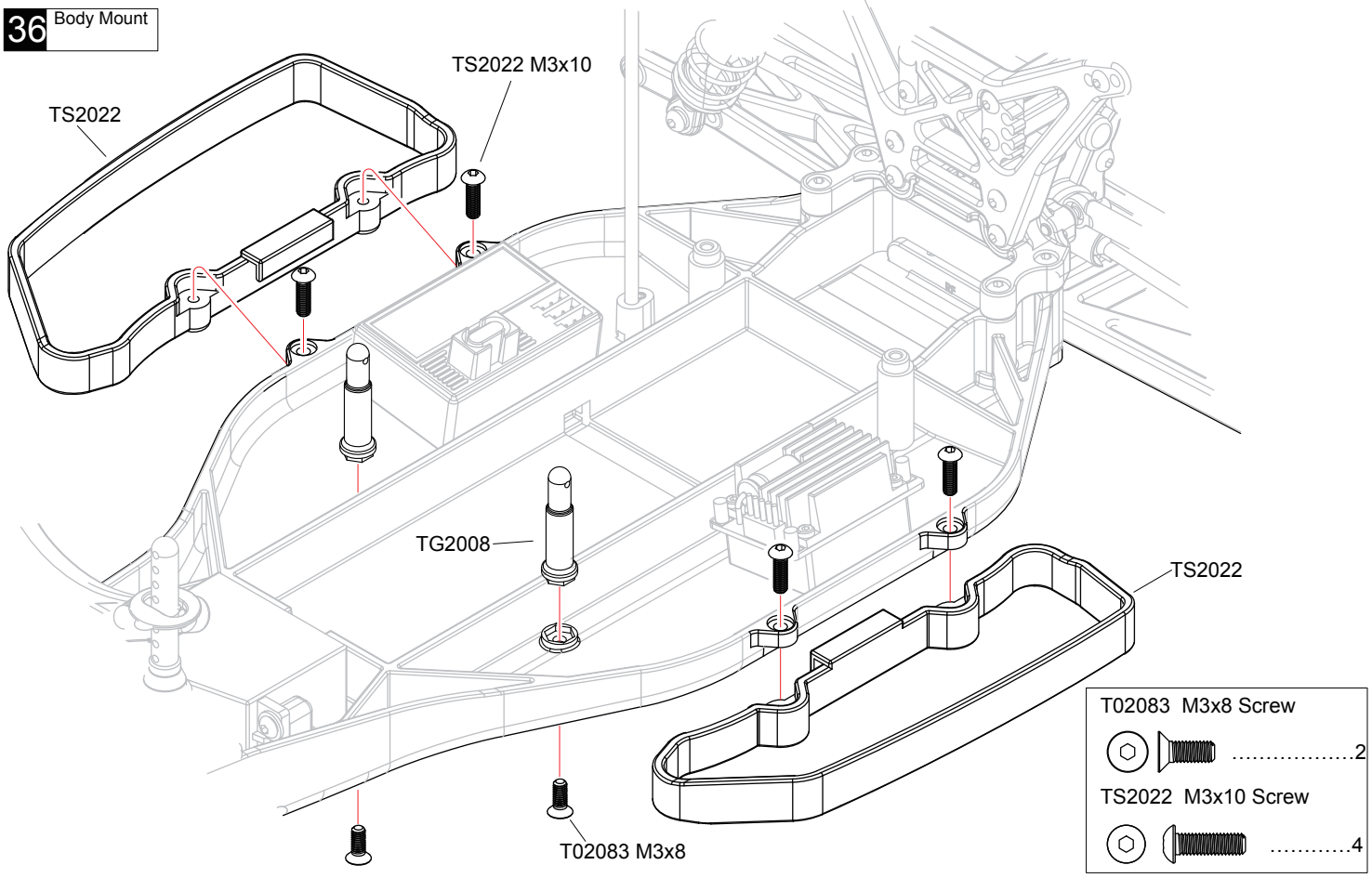

37 Battery

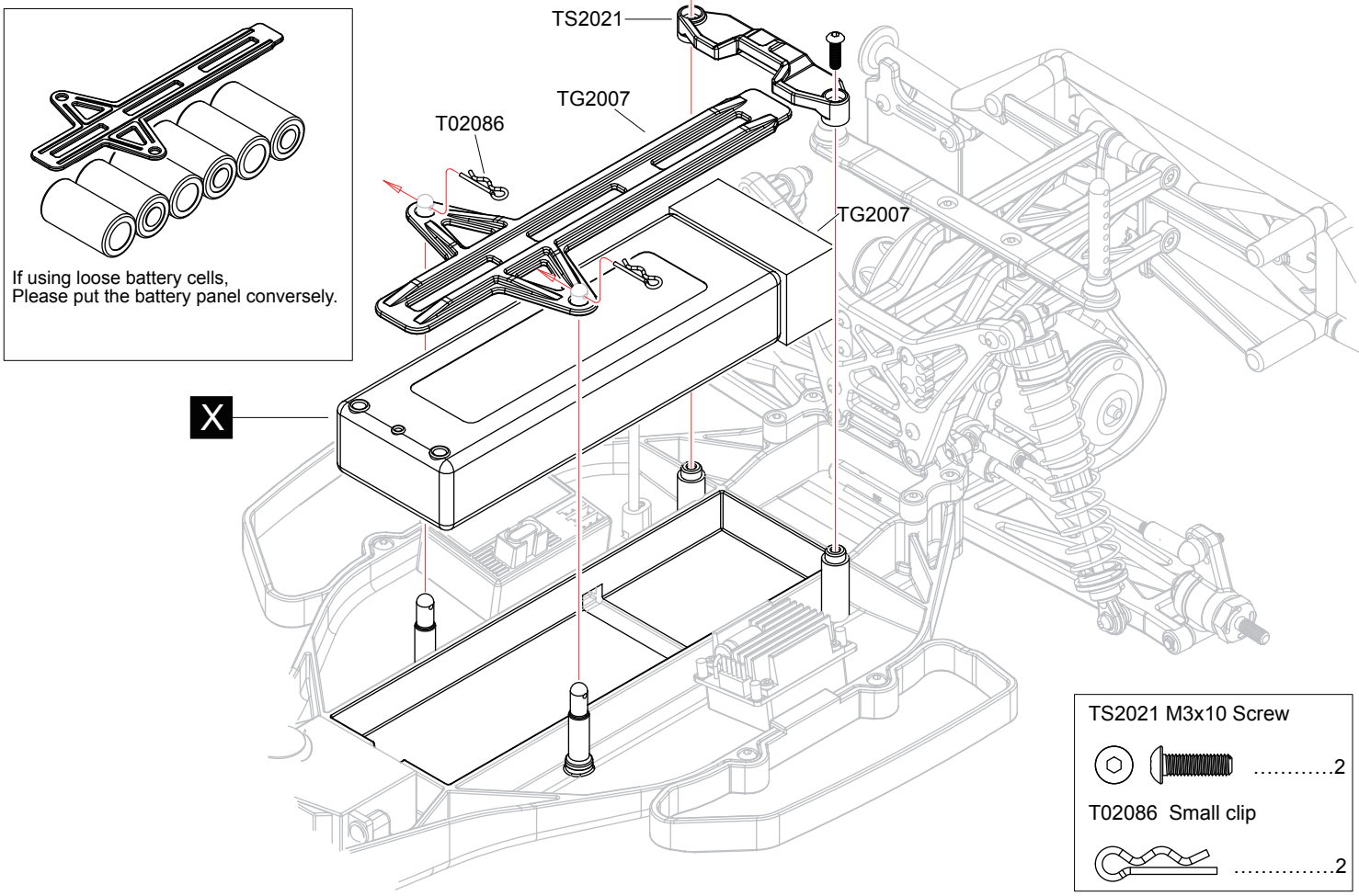

X Must be purchased separately

38 Tyre

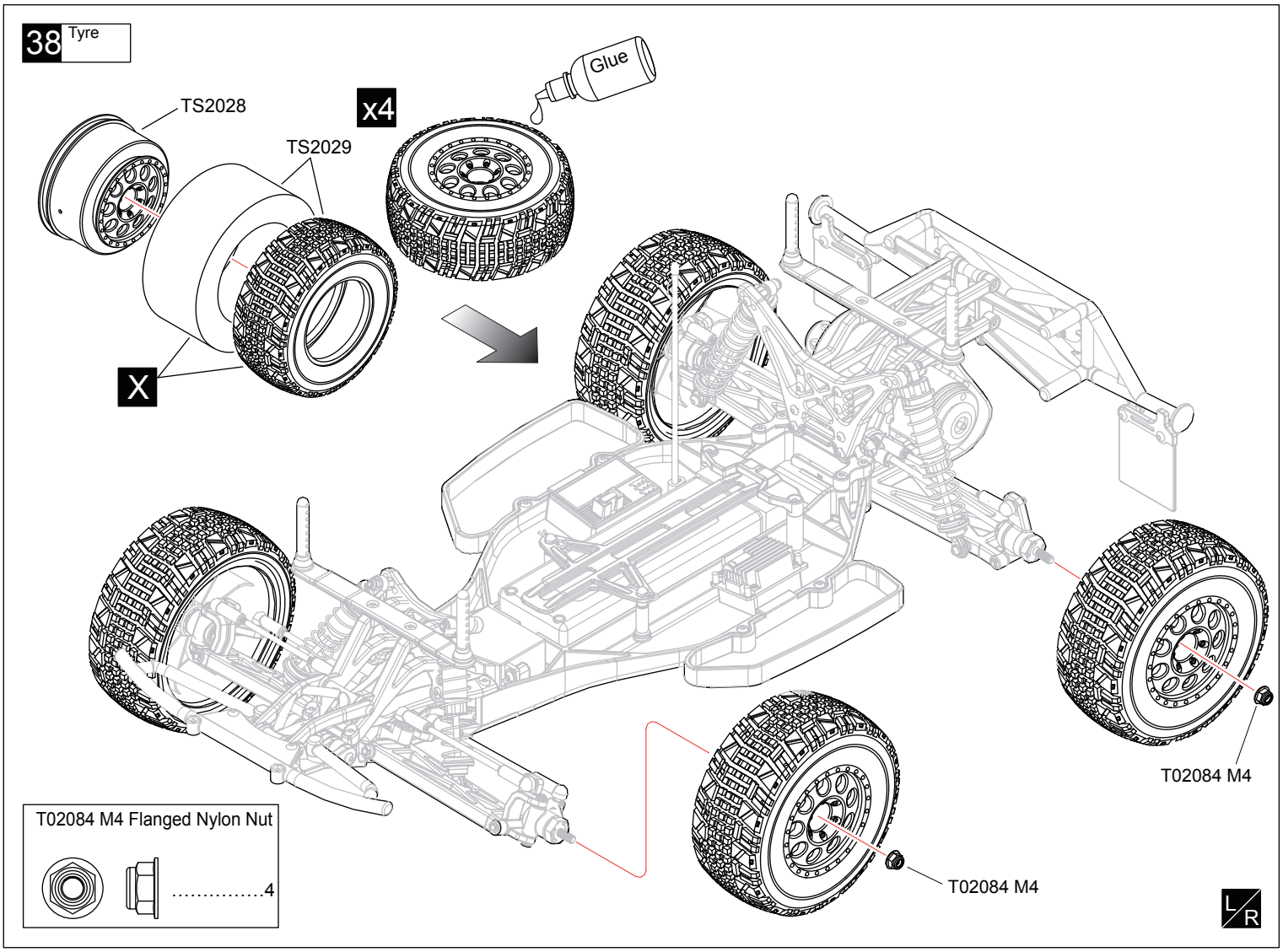

39 Body

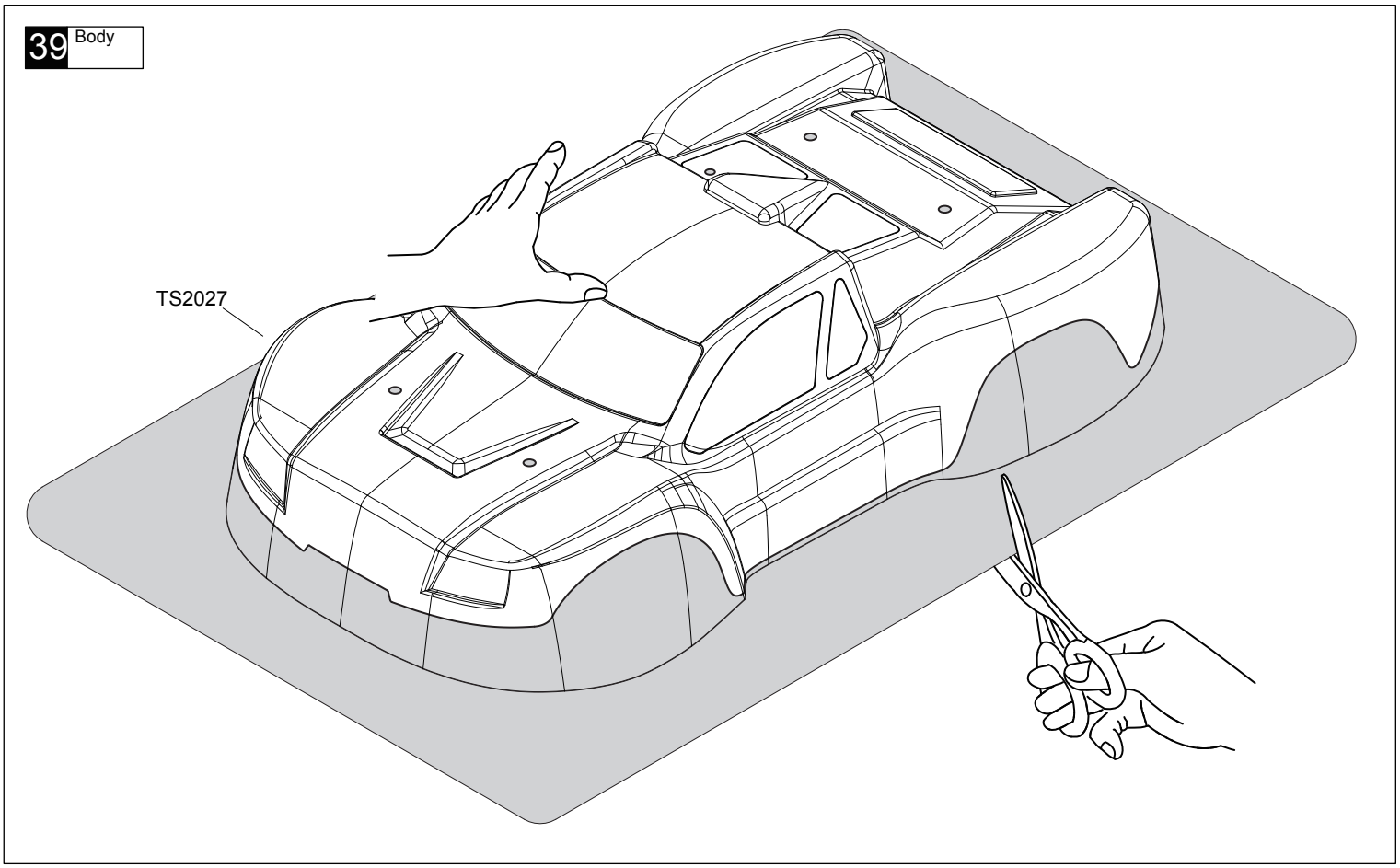

L/R Assemble Both Left And Right

x4 Assemble as many times as specified

X Must be purchased separately

40 Body

Mask the windows from the inside.

Paint the body shell from the inside using spray colors.

41 Body

TS2022 Small clip

.....8

TS2022

TS2022

Exploded View

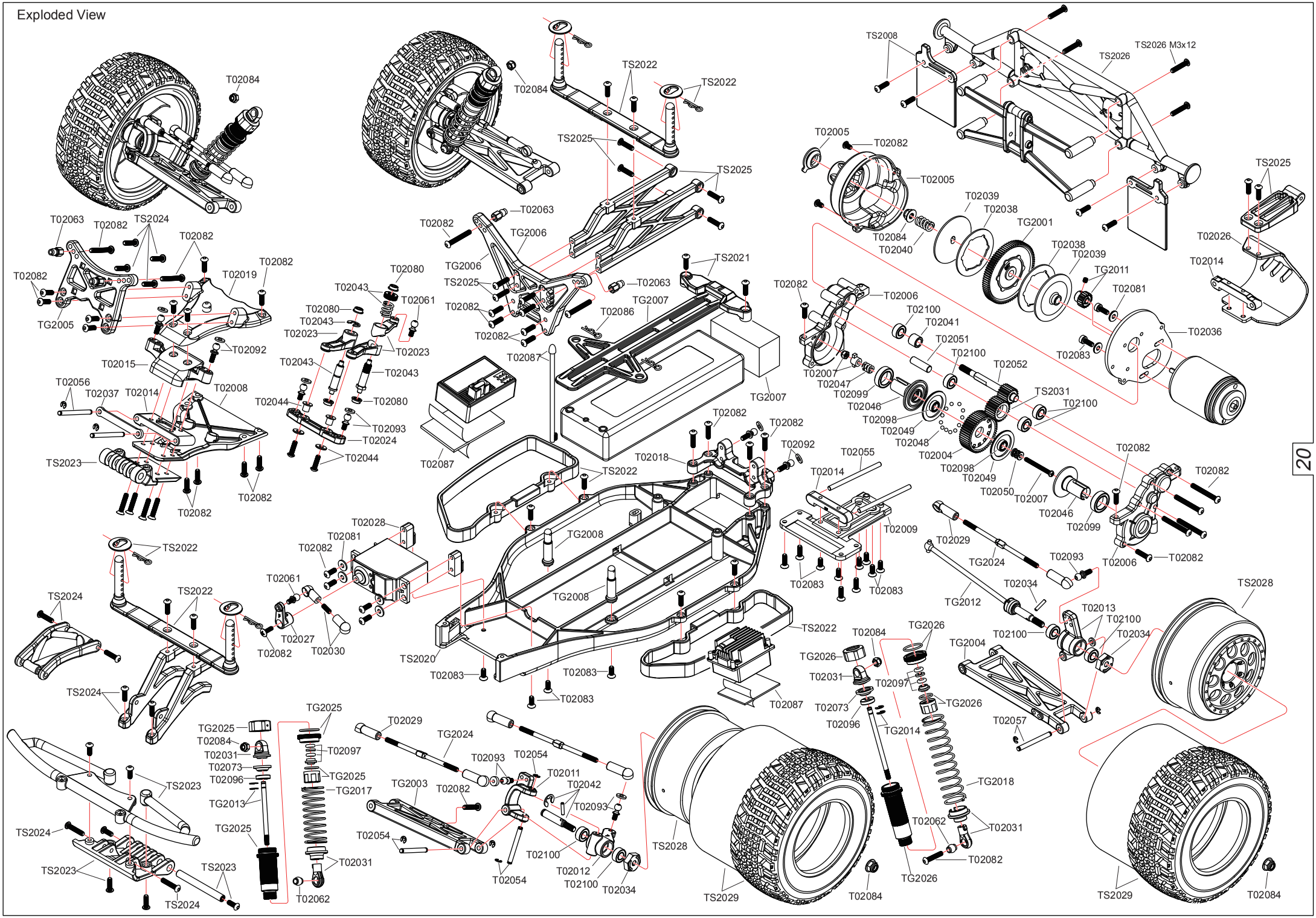

Parts list for TS2 Short-Course-1

TS2020

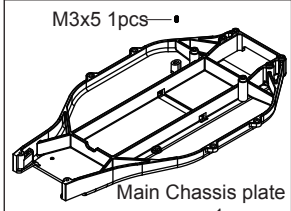

Main Chassis plate
1pcs

TS2021

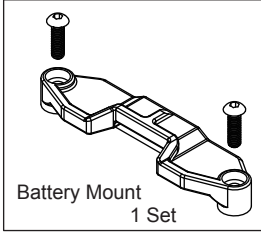

Battery Mount
1 Set

TS2022

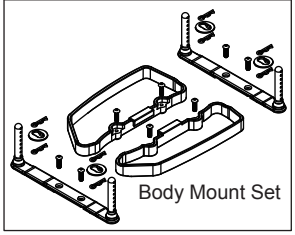

Body Mount Set

TS2023

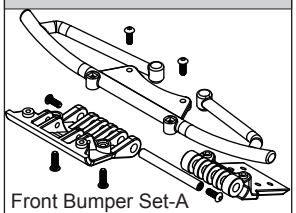

Front Bumper Set-A

TS2024

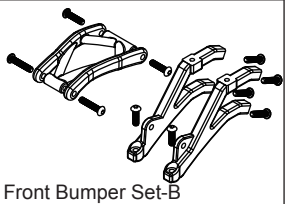

Front Bumper Set-B

TS2025

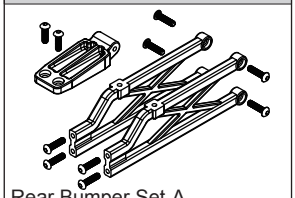

Rear Bumper Set-A

TS2026

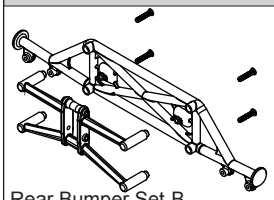

Rear Bumper Set-B

TS2027

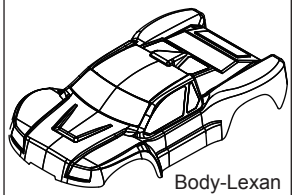

Body-Lexan
1pcs

TS2028

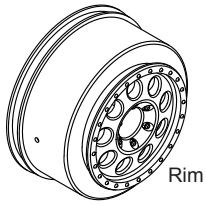

Rim
2pcs

TS2029

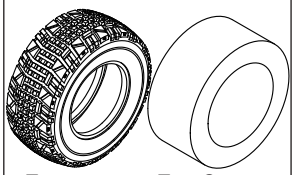

Tyre
2pcs

Tyre Sponge
2pcs

TS2031

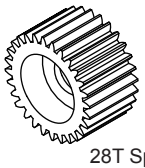

28T Spur Gear
1pcs

TS2008

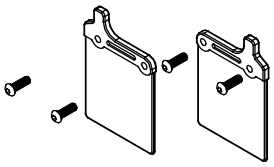

Rear Fender Plates 1Set

TG2001

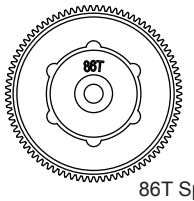

86T Spur Gear
1pcs

T02004

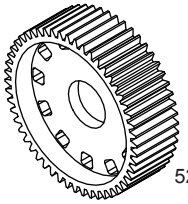

52T Gear
1pcs

T02005

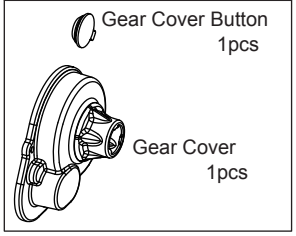

Gear Cover Button
1pcs

Gear Cover
1pcs

T02006

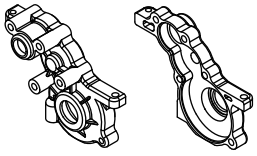

Differential-L
1pcs

Differential-R
1pcs

T02007

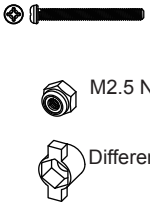

M2.5x25 Screw
1pcs

M2.5 Nylon Nut
1pcs

Differential Nut Mount
1pcs

T02008

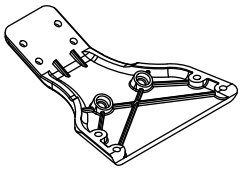

Front chassis plate
1pcs

T02009

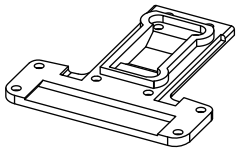

Rear chassis plate
1pcs

T02011

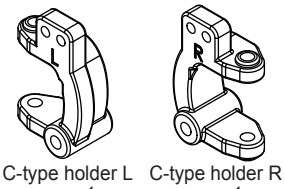

C-type holder L
1pcs

C-type holder R
1pcs

T02012

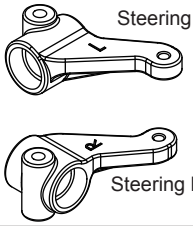

Steering block-L
1pcs

Steering block-R
1pcs

T02013

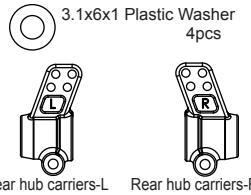

3.1x6x1 Plastic Washer
4pcs

Rear hub carriers-L
1pcs

Rear hub carriers-R
1pcs

T02014

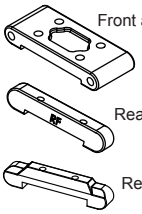

Front alight suspension arm mount
1pcs

Rear arm mount-F
1pcs

Rear arm mount-R
1pcs

T02015

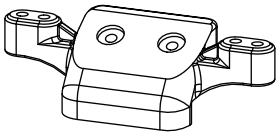

Front upper suspension arm mount
1pcs

TG2003

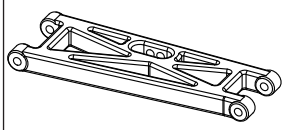

Front lower arms
2pcs

TG2004

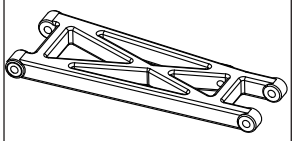

Rear lower arms
2pcs

T02018

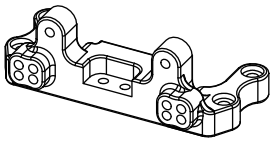

Rear brace mount
1pcs

T02019

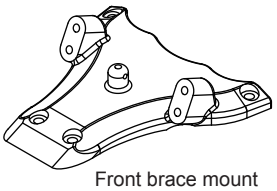

Front brace mount
1pcs

TG2005

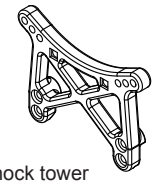

Front shock tower
1pcs

TG2006

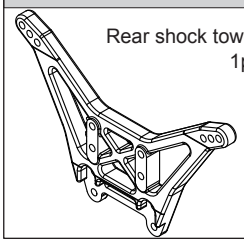

Rear shock tower
1pcs

TG2007

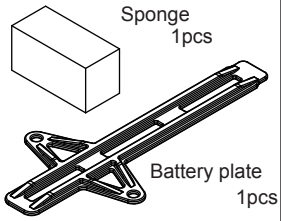

Sponge
1pcs

Battery plate
1pcs

T02023

Servo saver upper
1pcs

Servo saver lower
1pcs

Servo saver - L
1pcs

T02024

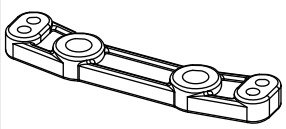

Steering Rack
1pcs

TG2008

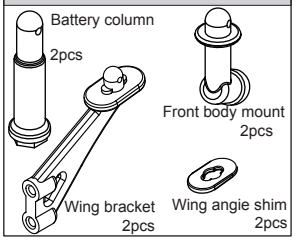

Battery column
2pcs

Front body mount
2pcs

Wing bracket
2pcs

Wing angie shim
2pcs

T02026

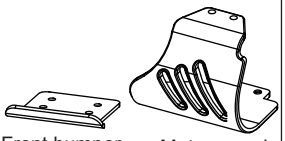

Front bumper
1pcs

Motor guard
1pcs

Parts list for TS2 Short-Course-2

T02027

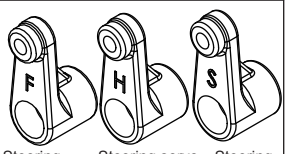

Steering servo horn-F 1pcs
Steering servo horn-H 1pcs
Steering servo horn-S 1pcs

T02028

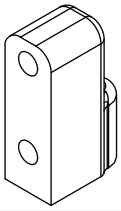

Servo plate 2pcs

T02029

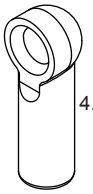

4.8 Ball End - Long 6pcs

T02030

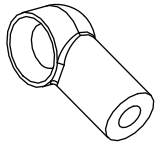

4.8 Ball End-Short 2pcs

3x10 Screw 螺丝 1pcs

T02031

Upper cover nylon cap 2pcs

Below Spring mount end 2pcs

5.8 Ball End 2pcs

T02034

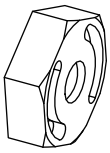

Hexagonal 4pcs

2x9.8 Pin 钢针 4pcs

T02035

1.0 Servo spacer 2pcs

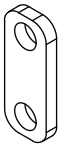

1.5 Servo spacer 2pcs

T02036

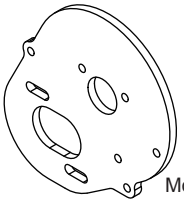

Motor plate 1pcs

T02037

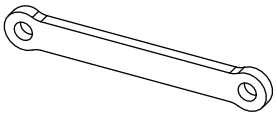

Front hinge pin barce 1pcs

T02038

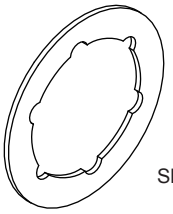

Slipper pad 2pcs

T02039

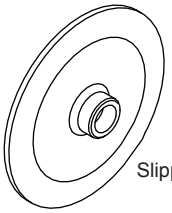

Slipper hub 2pcs

T02040

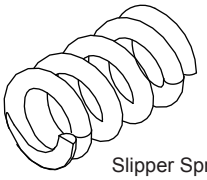

Slipper Spring 1pcs

T02041

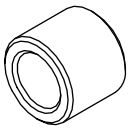

5x8x6.7 Top shaft spacer 1pcs

T02042

4.0 E-ring 2pcs

2x9.8 Pin 2pcs

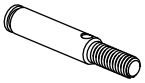

Front wheel axle 2pcs

TG2024

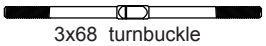

3x68 turnbuckle 4pcs

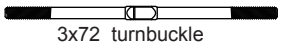

3x72 turnbuckle 2pcs

T02043

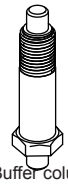

Buffer column-A 1pcs

Buffer Nut 1pcs

4.0 E-ring 1pcs

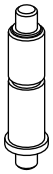

Buffer column-B 1pcs

Buffer Spring 1pcs

T02044

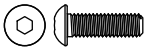

3x10 Screw 2pcs

Block Carrier 2pcs

3x7x0.8 Washer 2pcs

T02046

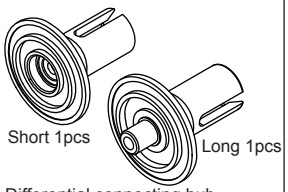

Differential connecting hub

T02047

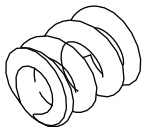

Differential Spring 1pcs

T02048

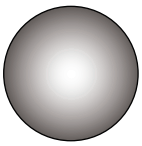

2.37mm Ball 12pcs

T02049

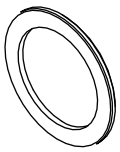

17x23x1 Washer 2pcs

T02050

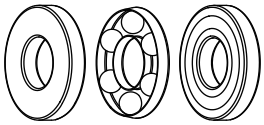

2.6x6x3 Stop push ball bearing 1pcs

T02051

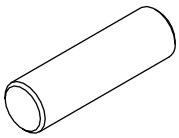

idler gear shaft 1pcs

T02052

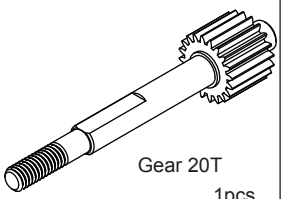

Gear 20T 1pcs

T02054

2.3 E-ring 4pcs

3x27.5 Hinge pin front outer 2pcs

T02055

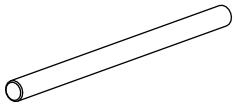

3x48 Hinge pin Rear inner 2pcs

T02056

2.3 E-ring 4pcs

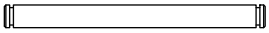

3x34.5 Hinge pin front inner 2pcs

T02057

2.3 E-ring 4pcs

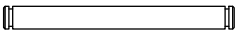

3x30.5 Hinge pin Rear outer 2pcs

TG2012

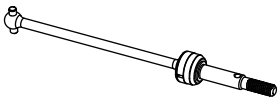

Rear CVD 2pcs

T02092

Ball stud sponge 2pcs

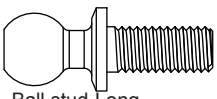

Ball stud-Long 2pcs

T02093

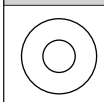

Ball stud sponge 5pcs

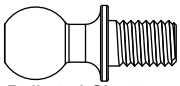

Ball stud-Short 5pcs

T02061

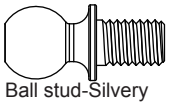

Ball stud-Silvery 2pcs

T02062

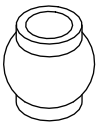

5.8x6 Ball stud 4pcs

T02063

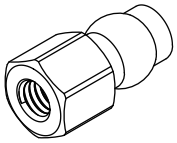

5mm Ball stud 4pcs

Parts list for TS2 Short-Course-3

TG2013

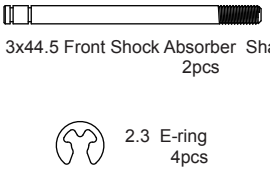

TG2014

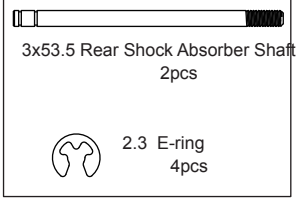

TG2025

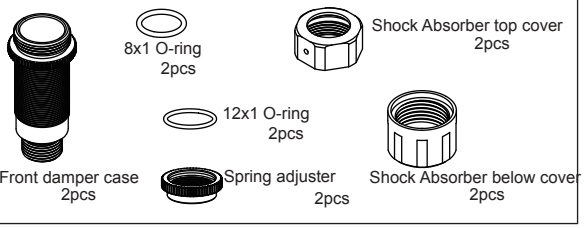

T02096

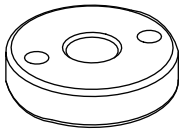

TG2026

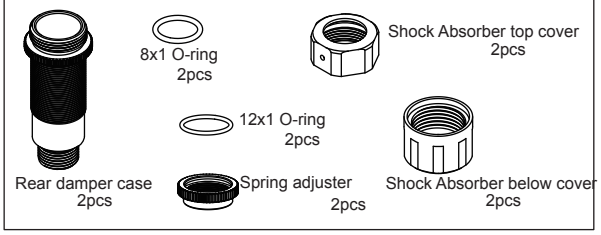

T02097

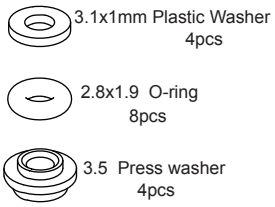

TG2017

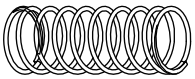

TG2018

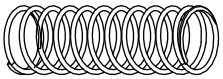

T02073

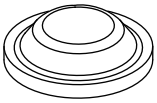

T02098

T02099

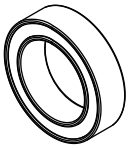

T02100

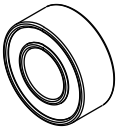

T02080

T02081

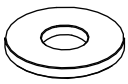

T02082

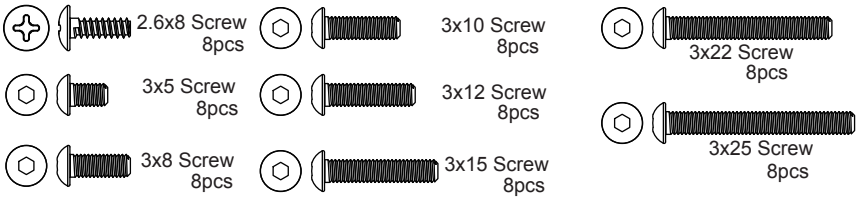

T02083

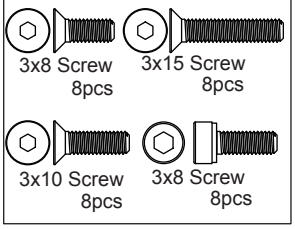

TG2027

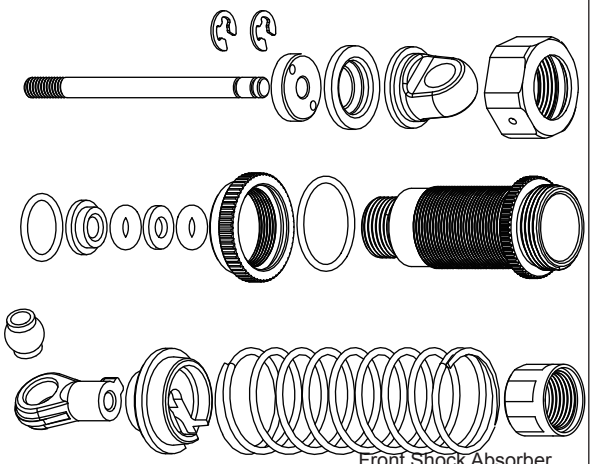

TG2028

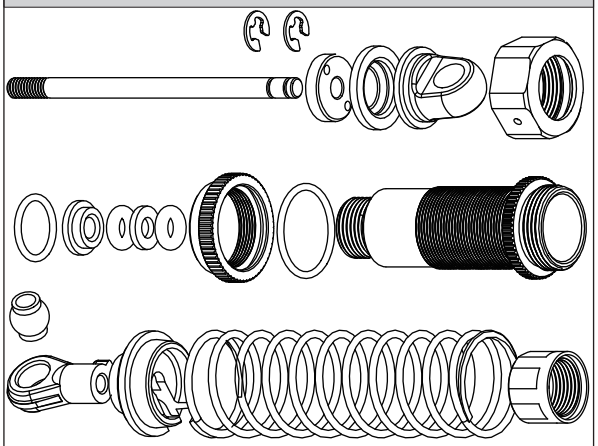

T02084

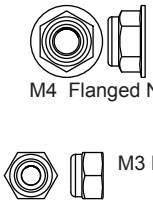

T02085

T02086

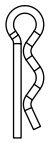

T02087

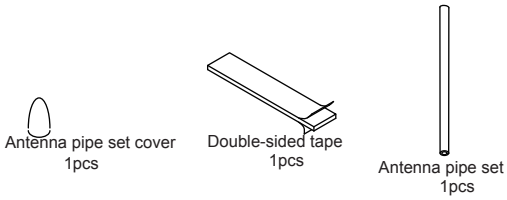

Tu0219 OP

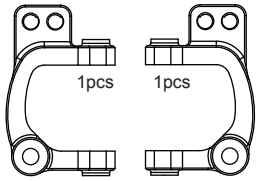

Tu0220 OP

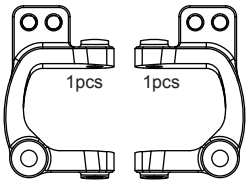

Parts list for TS2 Short-Course-4

Tu0221 OP

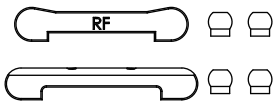

Rear arm mount F/R 1Set

Tu0222 OP

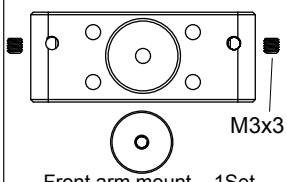

Front arm mount 1Set

Tu0223 OP

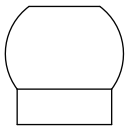

Rear arm mount -Ball 8pcs

Tu0224 OP

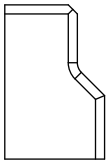

Servo mount 2pcs

Tu0236 OP

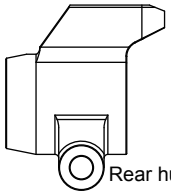

Rear hub carriers 2pcs

Tu0225 OP

M2x5 Screw 4pcs

5.1x8x0.2 Washer 4pcs

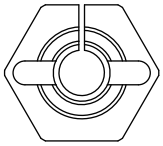

Hex mount 4pcs

Tu0226 OP

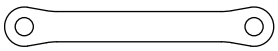

Front hinge pin brace 1pcs

Tu0228 OP

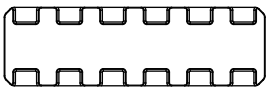

Brass battery tray 1pcs

Tu0229 OP

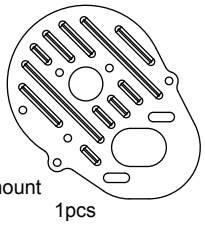

Motor mount 1pcs

Tu0234 OP

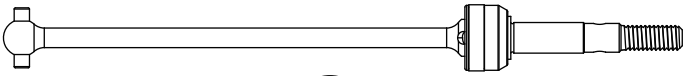

Truck CVD for ae rim 2pcs

1.6x11 Spring Pin 2pcs

Aluminum Washer 2pcs

5.1x8x0.2 Washer 4pcs

Tu0237 OP

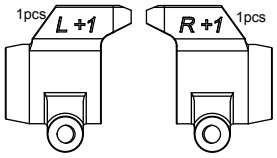

Rear Hub 1 Degree-Left/Right

Tu0238 OP

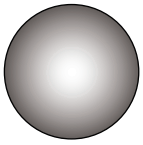

Ceramic Ball 2.37mm 12pcs

Tu0282 OP

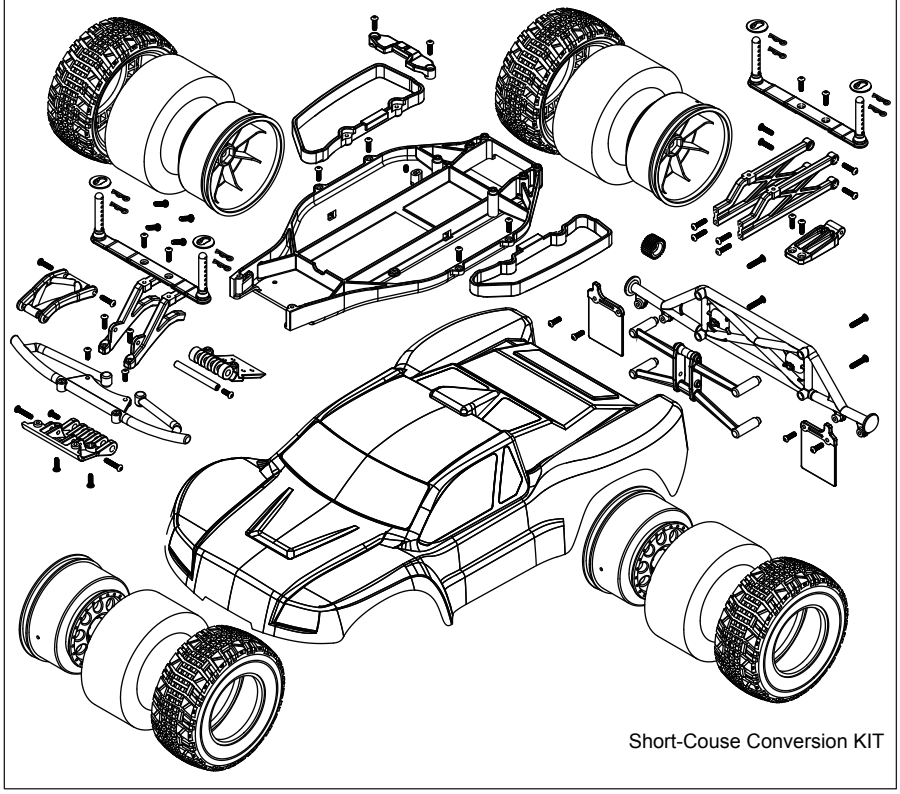

Short-Couse Conversion KIT

Tu0239 OP

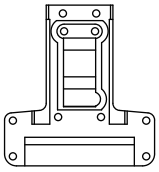

Carbon Rear Chassis 1pcs

Tu0243 OP

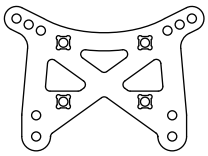

Carbon Front Shock Tower-Truck 1pcs

Tu0244 OP

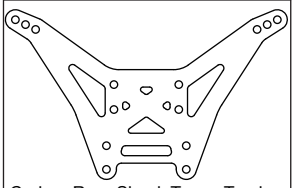

Carbon Rear Shock Tower-Truck 1pcs

H475 OP

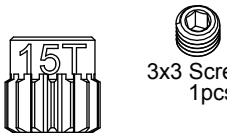

3x3 Screw 1pcs

Aluminium Motor Gear-15T 1pcs

H476 OP

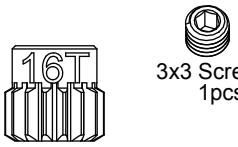

3x3 Screw 1pcs

Aluminium Motor Gear-16T 1pcs

H477 OP

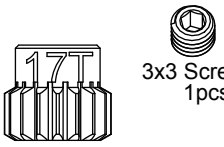

3x3 Screw 1pcs

Aluminium Motor Gear-17T 1pcs

H478 OP

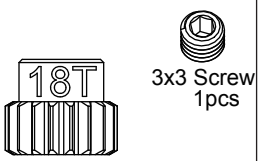

3x3 Screw 1pcs

Aluminium Motor Gear-18T 1pcs

H479 OP

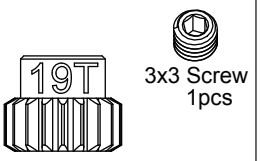

3x3 Screw 1pcs

Aluminium Motor Gear-19T 1pcs

H480 OP

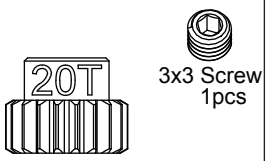

3x3 Screw 1pcs

Aluminium Motor Gear-20T 1pcs

H481 OP

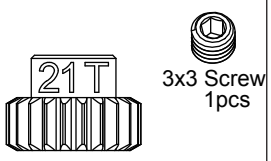

3x3 Screw 1pcs

Aluminium Motor Gear-21T 1pcs

H482 OP

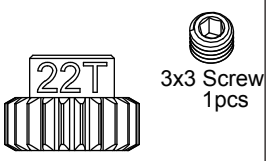

3x3 Screw 1pcs

Aluminium Motor Gear-22T 1pcs

TS2

SETUP SHEET for the TeamC TS2

www.teamcracing.net

Driver _____

Track / City _____

Event _____ Date ____ / ____ / ____

Conditions

☐ Smooth ☐ Bumpy ☐ Low traction ☐ Med traction

☐ High traction ☐ Sandy ☐ Soft dirt ☐ Grass ☐ Hard soil

☐ Clay ☐ Wet ☐ Dry ☐ Dusty ☐ Other

Front Suspension

Shock Mounting&Camber link

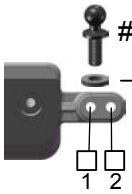

Washers

_____ mm

Camber

_____ °

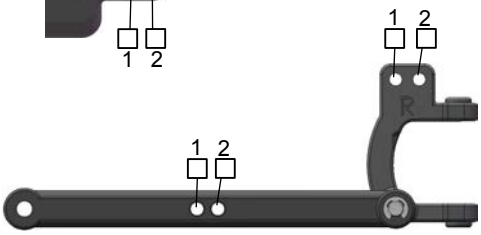

Toe-in (+)/Out (-) _____ °

Bump Steep Spacer _____

Caster

☐ 25°

☐ 30°

Washers

_____ mm

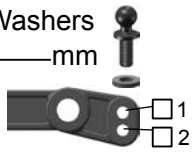

Ride height _____

Front Shocks

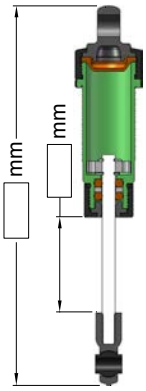

Spring(color)

☐ Black

☐ _____

Oil _____ wt

Piston # _____

Rear Suspension

Shock Mounting&Camber link

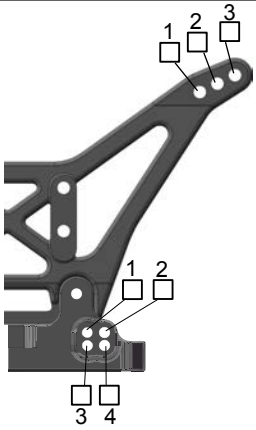

Wheelbase

☐ Long

☐ Medium

☐ Short

Camber

_____ °

Normal

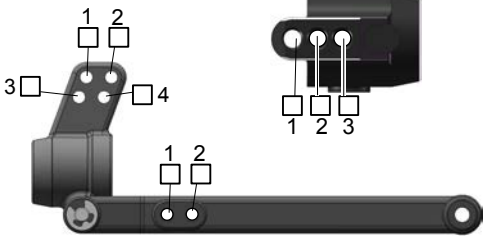

Aluminum(Opt)

Washers

_____ mm

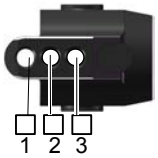

Ride height _____

Rear Shocks

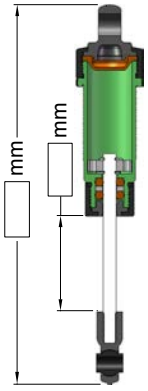

Spring(color)

☐ Black

☐ _____

Oil _____ wt

Piston # _____

Front Tires&Wheels

Front Tires _____

Inserts _____ Wheels _____

Rear Tires&Wheels

Rear Tires _____

Inserts _____ Wheels _____

Radio/Batteries

Servo _____

Esc _____

Batteries _____

Motor

Motor _____

Pinion/Spur _____ / _____

Comments

Notes _____

_____

_____

HOBBYPRO COMPANY LTD.

Flat C-D, 5/F.,

Speedy Ind. BLDG.,

114 How Ming Street,

Kwun Tong, KLN., Hong Kong.

Team C Headquarter

www.teamcracing.net

Team C America

www.teamcamerica.com

Team C Europe

www.teamceurope.com